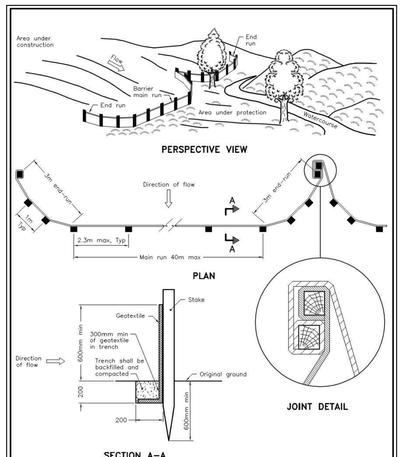

NOTE:
A All dimensions are in millimetres unless otherwise shown.

ONTARIO PROVINCIAL STANDARD DRAWING	Nov 2015	Rev 2
LIGHT–DUTY SILT FENCE BARRIER		OPSD 219.110

NOTES:

1. WOVEN WIRE FENCE TO BE FASTENED SECURELY TO WOOD POSTS WITH WIRE TIES OR STAPLES.
2. POSTS TO BE SPACED AT 2.3 METRES CENTRE TO CENTRE.
3. WHEN TWO SECTIONS OF FILTER CLOTH ADJOIN EACH OTHER THEY SHALL BE OVERLAPPED BY A MINIMUM OF 500mm.
4. MAINTENANCE SHALL BE PERFORMED AS NEEDED AND MATERIAL REMOVED WHEN "BULGES" DEVELOP IN THE SILT FENCE.
5. WOOD POSTS TO BE HARDWOOD TYPE (50mm x 50mm).
6. GEOTEXTILE TO BE EMBEDDED 200mm INTO GROUND.
7. GEOTEXTILE TO CONFORM TO OPSS 805 STANDARDS.
8. SILT FENCE MUST BE INSTALLED BEFORE COMMENCEMENT OF CONSTRUCTION AND IN ACCORDANCE WITH DETAIL. SILT FENCE CAN BE REMOVED AFTER LANDSCAPING IS COMPLETE.
9. SEDIMENTS MUST BE CLEARED AWAY WHEN THEY REACH HALF THE HEIGHT OF THE FENCE.

EROSION AND SEDIMENT CONTROLS DURING CONSTRUCTION.

DURING ALL CONSTRUCTION ACTIVITIES, EROSION AND SEDIMENTATION SHALL BE CONTROLLED BY THE FOLLOWING TECHNIQUES:

1. LIMITING THE EXTENT OF EXPOSED SOILS AT ANY GIVEN TIME.
2. REVEGETATION OF EXPOSED AREAS AS SOON AS POSSIBLE.
3. MINIMIZATION OF AREA TO BE CLEARED AND DISRUPTION TO ADJACENT AREAS.
4. INSTALLATION OF FILTER CLOTH BETWEEN FRAME AND COVER ON ALL PROPOSED CATCH BASINS AND CATCH BASIN MANHOLES.
5. A SILT FENCE TO BE INSTALLED 0.3m INSIDE THE SITE PROPERTY LINE TO LOCATIONS SHOWN ON THIS DRAWING.
6. A VISUAL INSPECTION SHALL BE COMPLETED DAILY ON SEDIMENT CONTROL BARRIERS AND ANY DAMAGE REPAIRED IMMEDIATELY. CARE WILL BE TAKEN TO PREVENT DAMAGE DURING CONSTRUCTION OPERATIONS.
7. IN SOME CASES SOME BARRIERS MAY BE REMOVED TEMPORARILY TO ACCOMODATE THE CONSTRUCTION OPERATIONS. THE AFFECTED BARRIERS WILL BE REINSTATED AT NIGHT WHEN CONSTRUCTION IS COMPLETED.
8. THE SEDIMENT CONTROL DEVICES WILL BE CLEANED OF ACCUMULATED SILT AS REQUIRED. THE DEPOSITS WILL BE DISPOSED OF AS PER THE REQUIREMENTS OF THE CONTRACT.
9. DURING THE COURSE OF CONSTRUCTION IF THE ENGINEER BELIEVES THAT ADDITIONAL PREVENTION METHODS ARE REQUIRED TO CONTROL EROSION AND SEDIMENTATION, THE CONTRACTOR WILL INSTALL ADDITONAL SILT FENCES OR OTHER METHODS AS REQUIRED TO THE SATISFACTION OF THE ENGINEER.
10. CONSTRUCTION AND MAINTENANCE REQUIRMENTS FOR EROSION AND SEDIMENT CONTROLS TO COMPLY WITH ONTARIO PROVINCIAL STANDARD SPECIFICATION (OPSS) OPSS 805, AND CITY OF OTTAWA SPECIFICATIONS.
11. SEDIMENT AND EROSION CONTROL MEASURES MAY BE MODIFIED IN THE FIELD AT THE DISCRETION OF THE CITY OF OTTAWA SITE INSPECTOR OR CONSERVATION AUTHORITY.

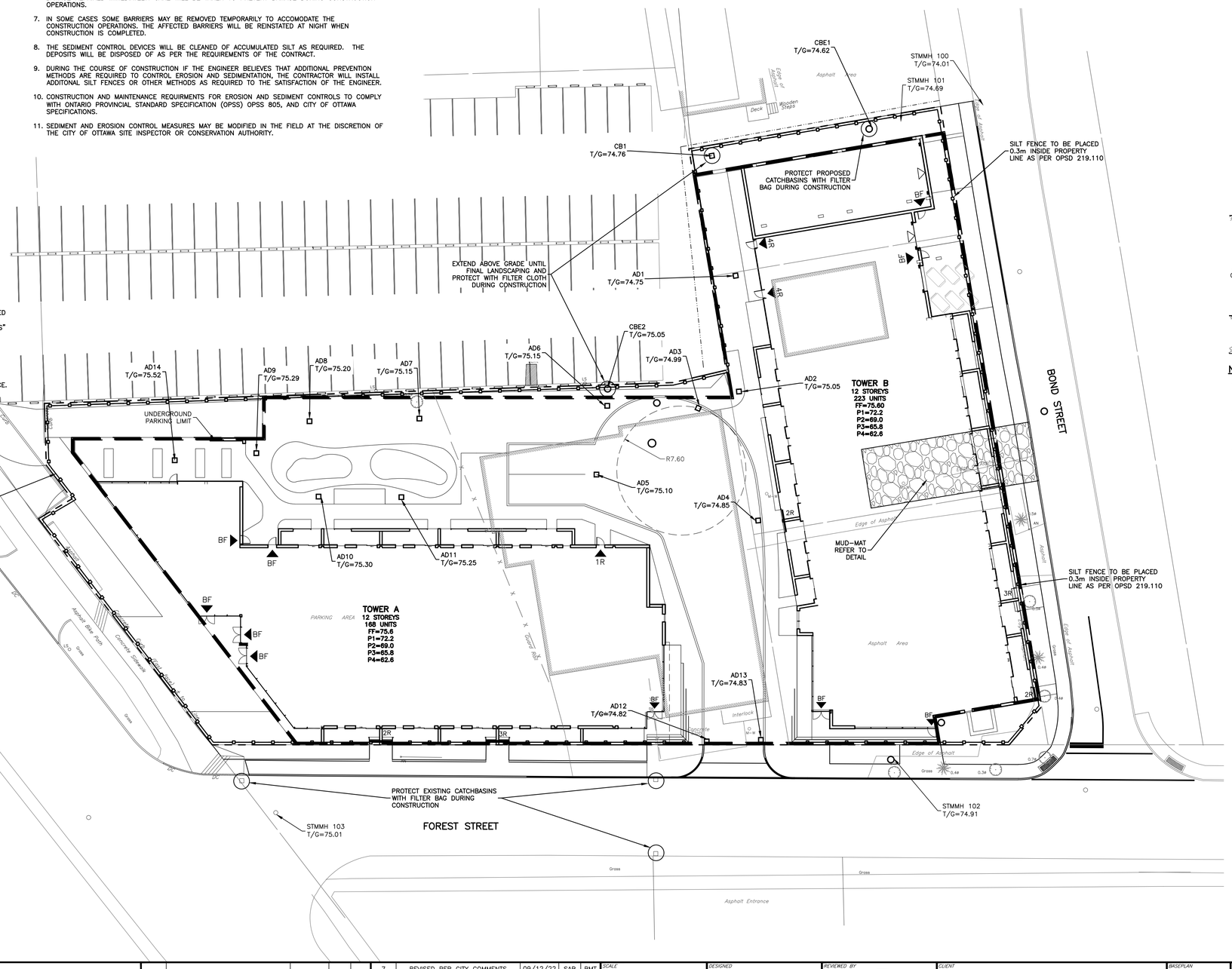

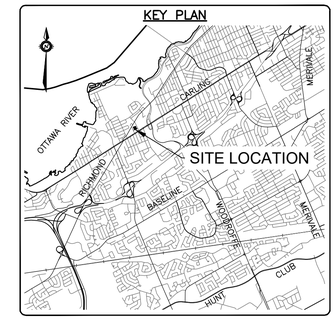

LEGEND

- PROPERTY LINE
- PROPOSED CURB
- SILT FENCE

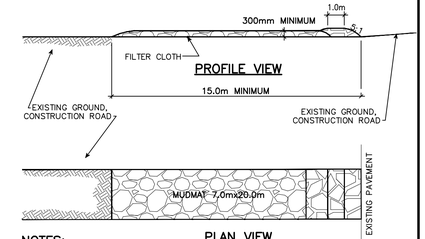

NOTES:

1. STONE – USE CLEAR CRUSHED 100mm STONE.
2. LENGTH – AS REQUIRED BUT NOT LESS THAN 15.0m.
3. THICKNESS – NOT LESS THAN 300mm.
4. WIDTH – 7.0m MINIMUM, NOT LESS THAN THE WIDTH AT POINTS WHERE INGRESS OR EGRESS OCCURS.
5. FILTER CLOTH – WILL BE PLACED OVER THE ENTIRE AREA PRIOR TO PLACING STONE.
6. MAINTENANCE – THE ENTRANCE SHALL BE MAINTAINED IN A CONDITION WHICH WILL PREVENT TRACKING OR FLOWING OF SEDIMENT ONTO PUBLIC RIGHT–OF–WAY. THIS MAY REQUIRED PERIODIC TOP DRESSING WITH ADDITIONAL STONE AS CONDITIONS DEMAND AND REPAIR AND/OR CLEAN OUT OF ANY MEASURES USED TO TRAP SEDIMENT. ALL SEDIMENT SPILLED, DROPPED OR TRACKED ONTO THE PUBLIC RIGHT–OF–WAY MUST BE REMOVED IMMEDIATELY.
7. PERIODIC INSPECTION AND NEEDED MAINTENANCE SHALL BE PROVIDED AFTER EACH RAIN.

MUD MAT DETAIL

N.T.S

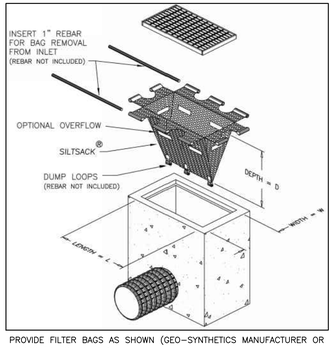

PROVIDE FILTER BAGS AS SHOWN (GEO–SYNTHETICS MANUFACTURER OR APPROVED EQUIVALENT)

FILTER BAG DETAIL

N.T.S

CAUTION
THE POSITION OF ALL POLE LINES, CONDUITS, WATERMAINS, SEWERS AND OTHER UNDERGROUND AND OVERGROUND UTILITIES AND STRUCTURES IS NOT NECESSARILY SHOWN ON THE CONTRACT DRAWINGS, AND WHERE SHOWN, THE ACCURACY OF THE POSITION OF SUCH UTILITIES AND STRUCTURES IS NOT GUARANTEED. BEFORE STARTING WORK, DETERMINE THE EXACT LOCATION OF ALL SUCH UTILITIES AND STRUCTURES AND ASSUME ALL LIABILITY FOR DAMAGE TO THEM.

REV	REVISION DESCRIPTION	DATE	BY	APPD
10	RESUBMITTED TO CITY	30/10/23	AC	BMT
9	REVISED PER ARCH PLAN	11/08/23	AC	BMT
8	REVISED PER CITY COMMENTS	06/06/23	AC	BMT
7	REVISED PER CITY COMMENTS	09/12/22	SAB	BMT
6	REVISED PER CITY COMMENTS	17/11/22	AC	BMT
5	REVISED PER CITY COMMENTS	15/09/22	AC	BMT
4	REVISED PER CITY COMMENTS	10/12/21	AC	JD
3	REVISED PER CITY COMMENTS	27/05/21	AC	BMT
2	ISSUED FOR REZONING APPLICATION	27/01/20	MZG	BMT
1	ISSUED FOR REVIEW	12/09/19	SAB	BMT

SCALE: 0 2m 4m 10m HORIZONTAL 1:250
NORTH
DESIGNED BY
REVIEWED BY: LICENSED PROFESSIONAL ENGINEER B. M. THOMAS 2023-10-31 PROVINCE OF ONTARIO

CLIENT
11061917 CANADA INCORPORATED
100–768 ST. JOSEPH BOULEVARD
GATINEAU, QC. J8Y 4B8

exp Services Inc.
t: +1.613.688.1899 | f: +1.613.225.7330
2650 Queensview Drive, Unit 100
Ottawa, ON K2B 8H6
Canada
www.exp.com
• BUILDINGS • EARTH & ENVIRONMENT • ENERGY •
• INDUSTRIAL • INFRASTRUCTURE • SUSTAINABILITY •

BASEPLAN SAB
DESIGN BMT
CHECKED BMT
CAD SAB
PROJECT MANAGER BMT
APPROVED BMT

PROJECT
11061917 CANADA INC
RESIDENTIAL DEVELOPMENT
365 FOREST STREET
OTTAWA, ONTARIO.

TITLE
EROSION AND SEDIMENT CONTROL PLAN

PROJECT No. OTT–252570–A0
SURVEY AOV
DATE JAN 2020
DRAWING No. C300

D07-12-20-0041

#18191

Filename\\ottfiles2023-data\projects\civil\252000\ott-0025257 0-A0 - 365 forest ave - 11061917 canada inc\05-execution\64-dwg\252570-c300.dwg
Last Saved: 11/10/2023 3:21:51 PM Plotted: 10/30/2023 1:24:48 PM by: Thomas, Brian M. Tab: C300
Layout: C300 Model: Model
References: xref-UTC.dwg; xref-ARCH.dwg; xref-ADV-TOPO.dwg; xref-TBlock.dwg; 252570-C100-200.dwg; xref-ARCH-22-06-23.dwg; 20-0086M M-005 Mechanical Site 2022-09-12.dwg