LEGEND:

- EXISTING PROPERTY LINE TO REMAIN
- PROPOSED EASEMENT
- PROPOSED TERRACING (3:1 MIN.)
- PROPOSED DOOR ENTRANCE/EXIT
- ×50.00 PROPOSED ELEVATION
- ×50.00HP PROPOSED HIGH POINT ELEVATION
- ×50.00SW PROPOSED SWALE ELEVATION
- ×50.00EX MATCH INTO EXISTING ELEVATION
- ×50.00SD PROPOSED SIDEWALK
- 70.19 EXISTING ELEVATION
- PROPOSED OVERLAND MAJOR FLOW ROUTE
- PROPOSED SILT FENCE AS PER OPSD 219.110
- STM PROPOSED 100mmØ PERFORATED SUBDRAIN
- STM PROPOSED STORM SEWER
- SAN PROPOSED SANITARY SEWER
- WTR PROPOSED WATERMAIN
- SAN EXISTING SANITARY SEWER
- WTR EXISTING WATERMAIN
- PROPOSED CATCHBASIN-MANHOLE/CATCHBASIN
- PROPOSED CURB STOP
- PROPOSED PIPE INSULATION
- PROPOSED 100 YEAR HIGH WATER LEVEL
- STORM WATERSHED EXTENT
- WS-XX WATERSHED NAME
- CONTROLLED RUNOFF COEFFICIENT
- AREA HECTARES
- PROPOSSED GRASS AREA
- PROPOSED CONCRETE FEATURES/SLAB
- PROPOSED HEAVY DUTY ASPHALT
- PROPOSED LIGHT DUTY ASPHALT
- PROPOSED GRAVEL AREA
- PROPOSED RIP RAP AS PER OPSD 810.010
- PROPOSED WATER METER
- PROPOSED ACCESS GATE
- PROPOSED GROWING FIELD

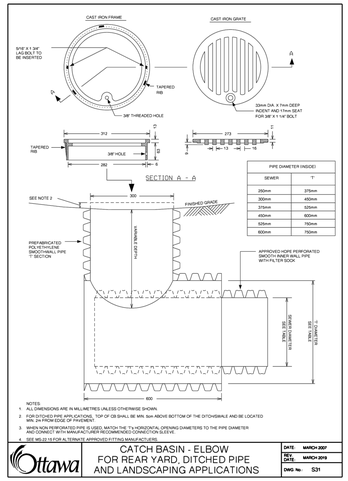

PIPE DIAMETER (INSIDE)	
SEWER	'T'
250mm	375mm
300mm	450mm
375mm	525mm
450mm	600mm
525mm	750mm
600mm	750mm

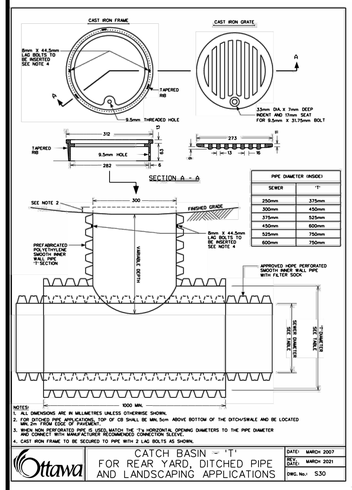

PIPE DIAMETER (INSIDE)	
SEWER	'T'
250mm	375mm
300mm	450mm
375mm	525mm
450mm	600mm
525mm	750mm
600mm	750mm

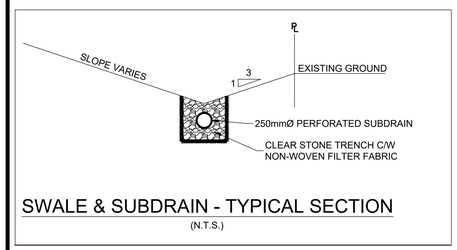

SWALE & SUBDRAIN - TYPICAL SECTION

(N.T.S.)

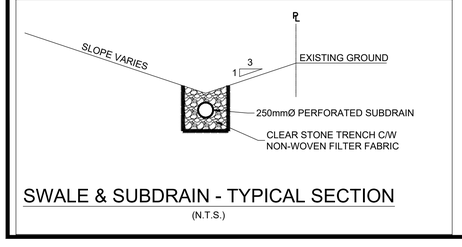

SWALE & SUBDRAIN - TYPICAL SECTION

(N.T.S.)

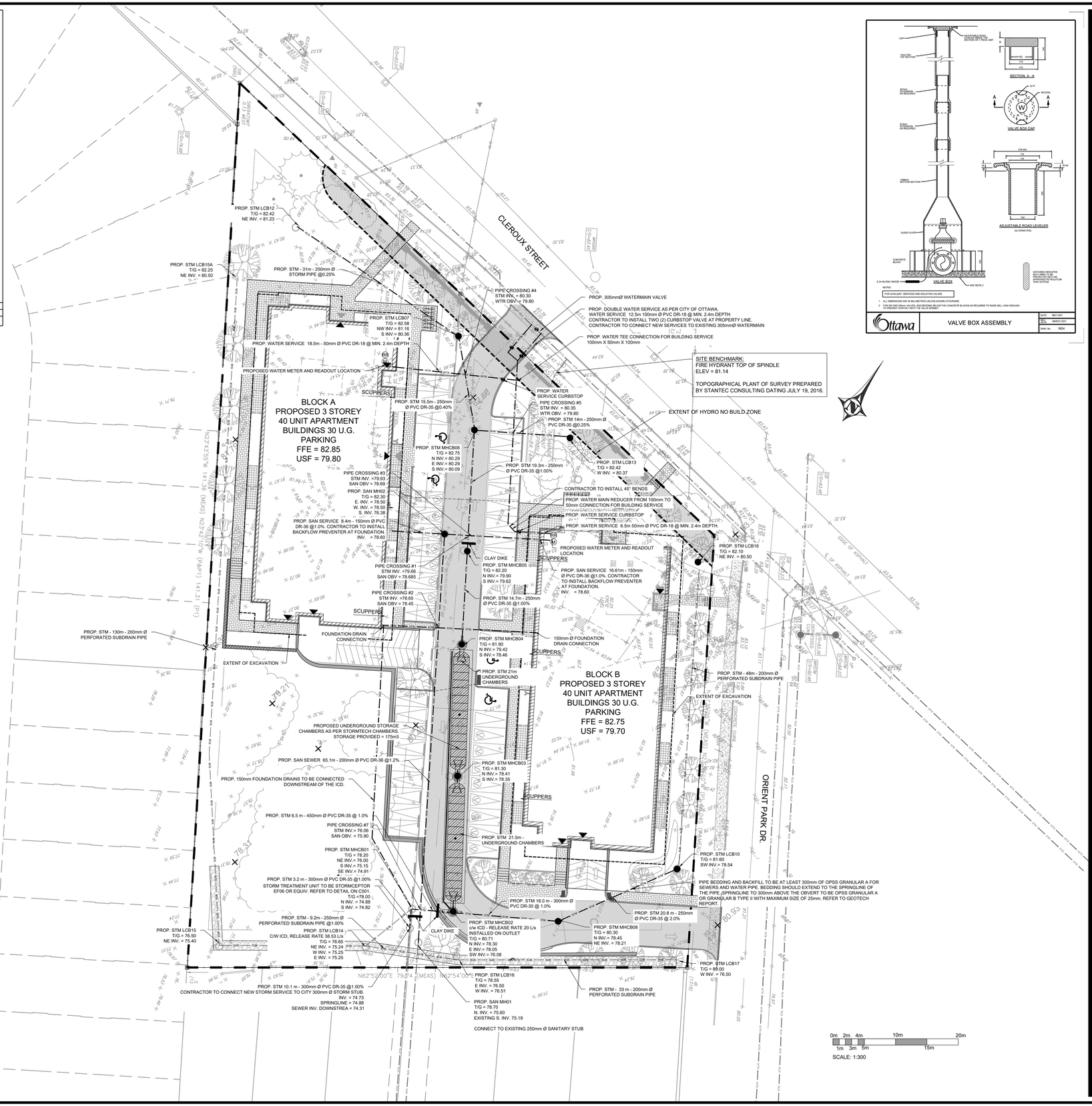

COPYRIGHT RESERVED
THE CONTRACTOR SHALL VERIFY AND BE RESPONSIBLE OF ALL DIMENSIONS. DO NOT SCALE THE DRAWING - ANY ERRORS OR OMISSIONS SHALL BE REPORTED TO BLANCHARD LETENDRE ENGINEERING LTD. WITHOUT DELAY. THE COPYRIGHTS TO ALL DESIGNS AND DRAWINGS ARE THE PROPERTY OF BLANCHARD LETENDRE ENGINEERING LTD. REPRODUCTION OR USE FOR ANY PURPOSE OTHER THAN THAT AUTHORIZED BY BLANCHARD LETENDRE ENGINEERING LTD. IS STRICTLY PROHIBITED.

ENGINEERING STAMP

NO.	REVISION	DATE (DD/MM/YYYY)
#8		
#7		
#6		
#5		
#4		
#3	ISSUED FOR SPA	14 / 06 / 2022
#2	ISSUED FOR SPA	04 / 02 / 2022
#1	ISSUED FOR SPA	19 / 03 / 2021

BLANCHARD LETENDRE ENGINEERING
767, Notre Dame, Embrun, Ontario, K0A 1W1
(613) 693-0700
blengineering.ca

CLIENT:

BRIDOR DEVELOPMENTS
996-B ST. AUGUSTIN RD.
EMBRUN, ON

PROJECT:

NEW RESIDENTIAL DEVELOPMENT
2380, 2396 CLEROUX CRES,
OTTAWA, ON

DRAWING:

SITE SERVICING PLAN

PAPER FORMAT:	24x36
DRAWN BY:	BF + GB
CHECKED BY:	GB
DATE:	07-2022
SCALE:	1:300
PROJECT NUMBER:	20-305

PAGE: C300

D0?-12-21-0081

DWG # 18569