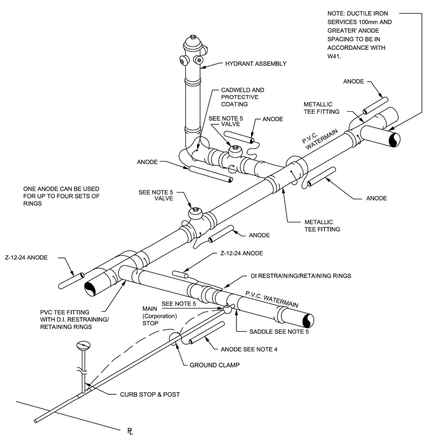

NOTES:

1. ANODE CONNECTING WIRE TO BE LOOPED AROUND PIPES / FITTINGS AND KNOTTED.
2. PROTECTIVE COATING TO BE APPLIED TO ALL CADWELDS.
3. ANODE TYPE & SPACING AS PER W42.
4. CONNECT ANODE TO COPPER SERVICES USING A GROUND CLAMP AND FOR PEX SERVICES CONNECT ANODE TO TRACER WIRE TERMINALS ON BOTH MAIN AND CURB STOPS.
5. PROTECT AUXILIARY VALVES, ISOLATION VALVES, SADDLES AND MAIN STOPS WITH A PETROLATUM WAX TAPE COATING SYSTEM. FOR PEX SERVICES ALSO WAX TAPE CURB STOP UP TO THE BASE OF THE TEE HEAD.
6. ALL DIMENSIONS ARE IN MILLIMETERS.

N.T.S.

Ottawa	CATHODIC PROTECTION FOR PVC WATERMAIN SYSTEMS	DATE: MAY 2001
		REV. DATE: MARCH 2013
		DWG. No.: W40

Ottawa

DRY HYDRANT INSTALLATION - SURFACE WATER SOURCE

DATE: MARCH 2018
SCALE:
DWG. No.: W53

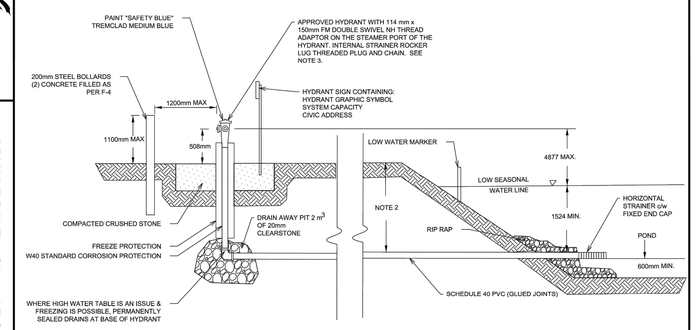

NOTES:

1. THESE ARE TYPICAL SPECIFICATIONS. LOCAL CONDITIONS MAY REQUIRE DEVIATION. ANY DEVIATION MUST BE APPROVED BY CONTRACT ADMINISTRATOR.
2. PIPING TO BE INSTALLED AT POSITIVE GRADE WITH NO HIGH OR LOW POINTS BETWEEN HYDRANT BASE AND INTAKE.
3. ALTERNATE SCHEDULE 40 STEEL PIPE WITH 90° ELBOW AND COULING AT TOP OF RISER PREFERRED WHERE RISK OF FREEZING IS NOT A THREAT.
4. PROVIDE CORROSION AND THRUST RESTRAINT AS PER THE STANDARD.

N.T.S.

SIZE (mm)	ANODE TYPE	WEIGHT (Kg)
19 TO 50 COPPER SERVICE	Z-12-24	5.4
38 TO 50 PEX SERVICE	Z-12-24	5.4
100 TO 300 DI SERVICE	Z-24-48	10.9
100 TO 300 DI FITTINGS	Z-12-24	5.4
100 TO 250 VALVES	Z-12-24	5.4
HYDRANT ASSEMBLY	Z-24-48	10.9
400 DI SERVICE/FITTINGS/VALVES	Z-24-48	10.9

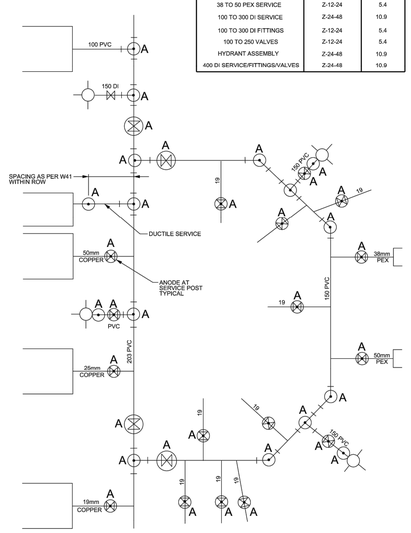

NOTES:

1. ALL DIMENSIONS ARE IN MILLIMETRES UNLESS SHOWN OTHERWISE.

N.T.S.

Ottawa	TYPICAL ANODE INSTALLATION PVC WATERMAIN	DATE: MAY 2001
		REV. DATE: MARCH 2014
		DWG. No.: W42

CLIENT LOGO:

FASTFRATE

CBRE

KEY PLAN:

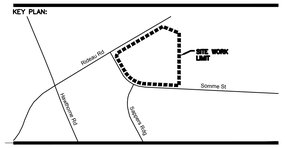

TRUE NORTH:

PROJECT NORTH:

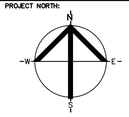

RECORD OF REVISIONS:

NUMBER:	REVISION:	DATE: (MM/DD/YYYY)
6		
5		
4		
3		
2	ISSUED FOR SITE PLAN CONTROL REV. 2	JUNE 7, 2022
1	ISSUED FOR SITE PLAN APPROVAL	DECEMBER 16, 2021

ISSUE:

PRELIMINARY 33%
NOT FOR CONSTRUCTION

PROFESSIONAL STAMP:

PROFESSIONAL STAMP:

CIVITAS GROUP
ARCHITECTURE & LANDSCAPE ARCHITECTURE

CIVITAS ARCHITECTURE INC | OTTAWA, ON | T: 613.742.7482
14 CHAMBERLAIN AVENUE, SUITE 101 | CANADA K1S 1V9 | WWW.CIVITAS-INC.CA

CONSULTANT LOGO:

PROJECT TITLE:

FASTFRATE OTTAWA WAREHOUSE AND DISTRIBUTION FACILITY

SCALE: NONE

SOMME ST.
OTTAWA, ON

DRAWING TITLE:

DETAILS

DRAWN BY:	D.CANN	DRAWING NUMBER:	
DATE:			
REVIEWED BY:	J.SAUVE		C015
APPROVED BY:			
PRINT DATE:		REVISION NUMBER:	
ISSUED DATE:	NOVEMBER 26, 2021		
CLIENT PROJECT #:		PROJECT #:	A001083

DO NOT SCALE THIS DRAWING. USE FIGURE DIMENSIONS ONLY. THE CONTRACTOR IS RESPONSIBLE FOR VERIFYING ALL DIMENSIONS AND NOTIFYING THE ARCHITECT OF ANY DISCREPANCIES BEFORE CONSTRUCTION COMMENCES. THIS DRAWING IS TO BE READ IN CONJUNCTION WITH ALL STRUCTURAL, MECHANICAL, ELECTRICAL, CIVIL, AND OTHER CONSULTANT DRAWINGS. THIS DRAWING SHALL NOT BE USED FOR CONSTRUCTION PURPOSES UNLESS SIGNED BY THE ARCHITECT. COPYRIGHT RESERVED. ALL PARTS OF THIS DRAWING ARE THE EXCLUSIVE PROPERTY OF THE ARCHITECT AND SHALL NOT BE USED WITHOUT THE EXPRESSED PERMISSION FROM THE ARCHITECT.

Z:\CIMA-C10\OTT_PROJECTS\A\A001000-A001499\A001083_FASTFRATE WAREHOUSE DEVELOPMENT\400\460_CIVIL