Amberwood Village Recreation Association
54 Springbrook Drive
Stittsville (Ottawa), ON, K2S 1B9

November 18th, 2020

C/O: Jack Stirling, the Stirling Group

RE: 54 Springbrook Drive
Combined Environmental Impact Statement & Tree Conservation Report – Addendum #1

1.0 BACKGROUND AND PURPOSE

McKinley Environmental Solutions (MES) was previously retained by the Amberwood Village Recreation Association (AVRA) to prepare the *Combined Environmental Impact Statement and Tree Conservation Report – 54 Springbrook Drive, Ottawa, Ontario* (dated June 2020) (MES 2020). The Site includes an approximately 0.28 ha development area, which is located within the southeastern portion of the Amberwood Golf and Country Club (Refer to Figure 1). The Site is proposed to be developed to accommodate five (5) residential lots, each of which will include a future single detached residential home. The Site consists of a small Cultural Woodlot which is located between the golf course playing area and Trailway Circle. Several residential homes also border the Site. The Site is surrounded by the golf course playing area and existing development on all sides, and does not directly interface with any adjacent significant natural heritage features. The Stittsville Wetland Complex is located approximately 182 m west of the Site, and several Golf Course Ponds are located northwest of the Site within the Amberwood Golf and Country Club.

MES (2020) was prepared to support the Zoning Bylaw Amendment and Part Lot Control applications for the proposed development (City of Ottawa File #: D02-02-20-0083). First submission review comments were received from the City of Ottawa and the Mississippi Valley Conservation Authority (MVCA) on November 5th, 2020. The purpose of this letter is to provide additional information in order to respond to the first submission review comments. This letter serves as Addendum #1 to the Combined Environmental Impact Statement (EIS) and Tree Conservation Report (TCR) (MES 2020). This letter report is intended to provide supplemental information that expands upon the Combined EIS and TCR (MES 2020). This letter report is intended to be read in conjunction with MES (2020). For

brevity, all methods, results, description of natural heritage features, mitigation requirements, and recommendations which were adequately addressed in MES (2020) are not discussed in this letter. Refer to MES 2020 for any additional information not discussed in this Addendum #1.

FIGURE 1: SITE OVERVIEW

Combined Environmental Impact Statement & Tree Conservation Report
54 Springbrook Drive, Ottawa, ON

- Tree Survey Area - Approximate Development Limits

McKINLEY ENVIRONMENTAL SOLUTIONS

Please Note: This is not a legal land survey. All dimensions and locations are shown as approximate.

2.0 TREE RETENTION AND GRADING REQUIREMENTS

Several comments from the City of Ottawa requested further information regarding the potential retention of trees within the Site. As described in Section 4.1 of the Combined Environmental Impact Statement (EIS) and Tree Conservation Report (TCR), all trees within the proposed development area will be removed in order to accommodate the construction of the five (5) new single detached homes. The density of the proposed development, as well as the anticipated extent of excavation and grading works, is such that it is not feasible to retain trees within the development area (MES 2020). However, opportunities to retain trees around the Site edges and within adjacent properties have been identified. The potential to retain trees along the Site edges and within adjacent properties is summarized below:

- **Southwest Boundary:** An existing residential home (1 Pine Bluff Trail) is located along the southwest edge of the Site. As shown in the Servicing and Grading Plan (included below), a side-yard setback that varies between 1.2 m and 2.4 m wide will be maintained adjacent to 1 Pine Bluff Trail. The Site grading will match existing grades adjacent to 1 Pine Bluff Trail. This is anticipated to be sufficient to retain the trees found on the adjacent property (1 Pine Bluff Trail). Within the Site, trees will be retained within the side-yard setback, wherever feasible and compatible with the development and grading requirements.
- **Western Boundary:** The Amberwood Golf and Country Club is located adjacent to the western Site boundary. The adjacent area of the Amberwood Golf and Country Club consists of an open lawn (e.g. golf course playing area), with no mature trees located in close proximity to the Site. In order to address the presence of the floodplain at the back of the future lots, a Cut and Fill operation will be required along the western boundary of the Site. The Cut and Fill operation is anticipated to result in significant grade changes. Due to the anticipated grade changes, it is unlikely that the majority of trees can be retained along the western boundary of the Site. However, Distinctive Trees #1 and #2 occur at the edge of the anticipated grading works (82 cm and 88 cm Weeping Willows, respectively). If feasible and compatible with the Cut and Fill/grading requirements, Distinctive Tree #1 and #2 will be retained at the edge of the Site.
- **Northeast Boundary:** A sewer easement is located adjacent to the northeast boundary of the Site. As shown in the Servicing and Grading Plan (included below), a side-yard setback that varies between 1.2 m and 2.4 m wide will be maintained adjacent to the sewer easement. The Site grading will slope downwards along the northeast boundary of the Site to match existing grades within the sewer easement (just beyond the Site boundary). This is anticipated to be sufficient to retain the majority of trees found northeast of the Site within the sewer easement. Within the Site, trees will be retained within the side-yard setback, wherever feasible and compatible with the development and grading requirements.

- **East Boundary:** Trailway Circle forms the eastern boundary of the Site. An aerial photograph is included below, which shows the limits of the Right of Way (ROW) of Trailway Circle (Photograph 1). A ground level photograph of the ROW of Trailway Circle is also included below (Photograph 2). Photograph 1 and 2 demonstrate that the trees growing along the eastern boundary of the Site occur entirely within the Site. Although portions of the canopy of some trees overhang the ROW of Trailway Circle, there are no tree stems found growing within the ROW adjacent to the Site boundary. As such, there are no trees found growing within City of Ottawa property (e.g. the ROW of Trailway Circle) adjacent to the eastern Site boundary. The front yards of the future residential homes will face Trailway Circle. Tree retention is not feasible within the front yards of the future residential homes, as the retention of existing trees would block construction access and would interfere with grading and excavation requirements. As such, tree retention along the eastern boundary of the Site is not anticipated to be feasible.

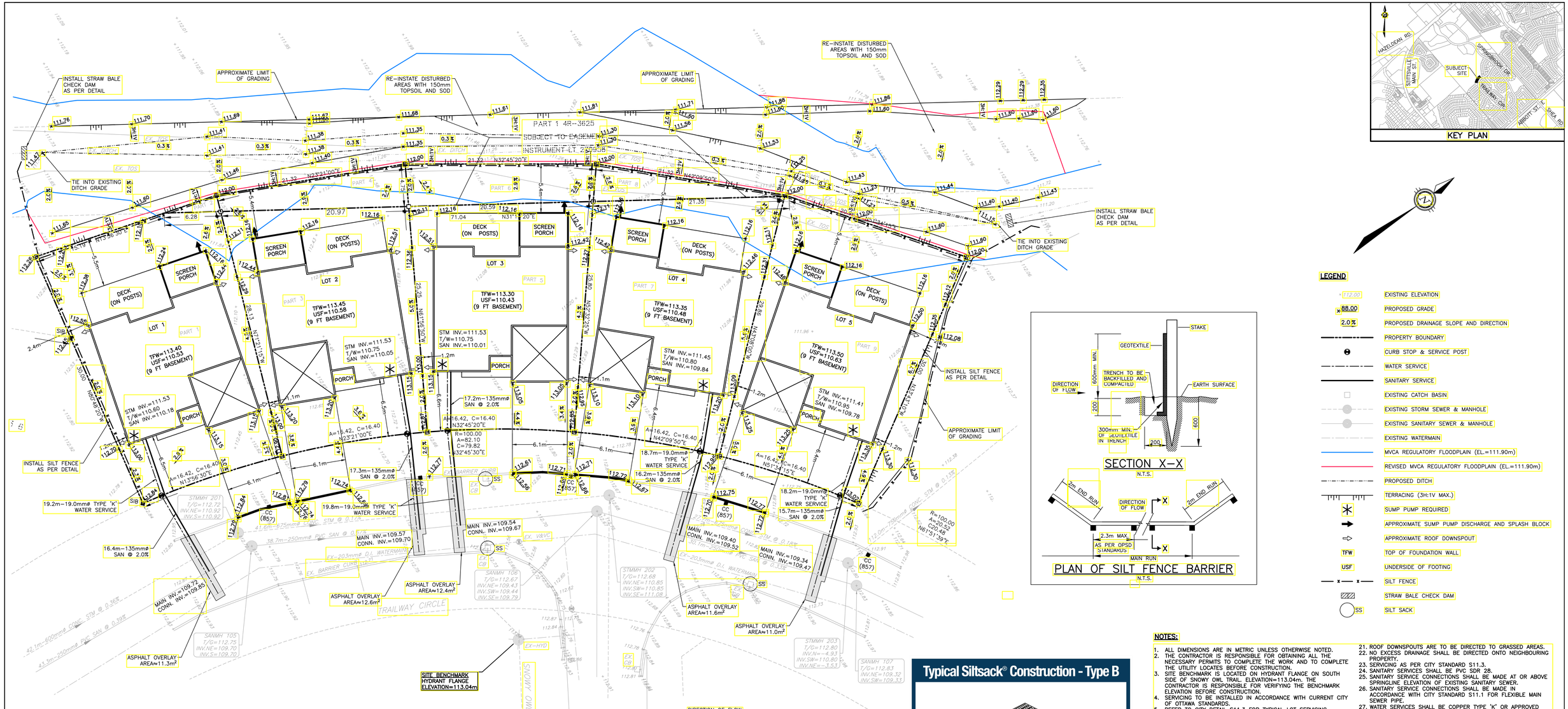

KEY PLAN

LEGEND

112.00	EXISTING ELEVATION
88.00	PROPOSED GRADE
2.0%	PROPOSED DRAINAGE SLOPE AND DIRECTION
	PROPERTY BOUNDARY
	CURB STOP & SERVICE POST
	WATER SERVICE
	SANITARY SERVICE
	EXISTING CATCH BASIN
	EXISTING STORM SEWER & MANHOLE
	EXISTING SANITARY SEWER & MANHOLE
	EXISTING WATERMAIN
	MVCA REGULATORY FLOODPLAIN (EL.=111.90m)
	REVISED MVCA REGULATORY FLOODPLAIN (EL.=111.90m)
	PROPOSED DITCH
	TERRACING (3H:1V MAX.)
	SUMP PUMP REQUIRED
	APPROXIMATE SUMP PUMP DISCHARGE AND SPLASH BLOCK
	APPROXIMATE ROOF DOWNSPOUT
TFW	TOP OF FOUNDATION WALL
USF	UNDERSIDE OF FOOTING
x — x	SILT FENCE
	STRAW BALE CHECK DAM
SS	SILT SACK

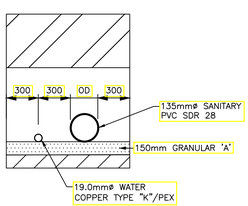

TYPICAL SERVICE TRENCH DETAIL
N.T.S.

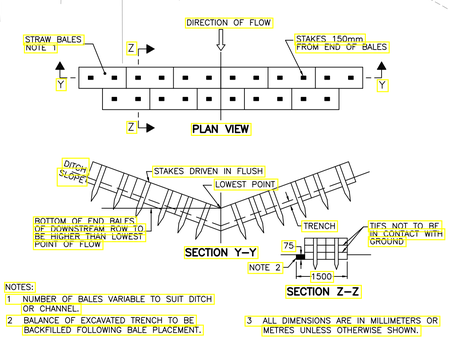

NOTES:
1 NUMBER OF BALES VARIABLE TO SUIT DITCH OR CHANNEL.
2 BALANCE OF EXCAVATED TRENCH TO BE BACKFILLED FOLLOWING BALE PLACEMENT.
3 ALL DIMENSIONS ARE IN MILLIMETERS OR METRES UNLESS OTHERWISE SHOWN.

SEDIMENT CONTROL STRAW BALE DETAIL
N.T.S.

Typical Siltsack® Construction - Type B

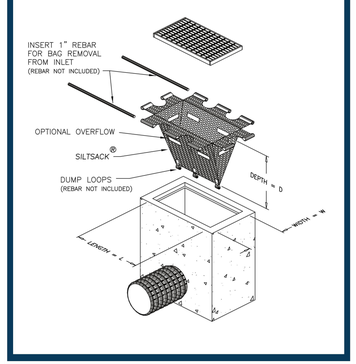

NOTES:

1. ALL DIMENSIONS ARE IN METRIC UNLESS OTHERWISE NOTED.
2. THE CONTRACTOR IS RESPONSIBLE FOR OBTAINING ALL THE NECESSARY PERMITS TO COMPLETE THE WORK AND TO COMPLETE THE UTILITY LOCATES BEFORE CONSTRUCTION.
3. SITE BENCHMARK IS LOCATED ON HYDRANT FLANGE ON SOUTH SIDE OF SNOWY OWL TRAIL. ELEVATION=113.04m. THE CONTRACTOR IS RESPONSIBLE FOR VERIFYING THE BENCHMARK ELEVATION BEFORE CONSTRUCTION.
4. SERVICING TO BE INSTALLED IN ACCORDANCE WITH CURRENT CITY OF OTTAWA STANDARDS.
5. REFER TO CITY DETAIL S11.3 FOR TYPICAL LOT SERVICING.
6. ALL DAMAGED AREAS WITHIN THE RIGHT-OF-WAY ARE TO BE REINSTATED TO EXISTING OR BETTER CONDITIONS.
7. ROAD CUTS SHALL BE SAW-CUT TO FORM A CLEAN STRAIGHT LINE. SERVICE TRENCH SHALL BE BACKFILLED TO MATCH EXISTING ROAD STRUCTURE IN ACCORDANCE WITH CITY STANDARD R10.
8. REINSTATE DAMAGED CURB AS PER CITY STANDARD SC1.1.
9. CITY WATER SERVICE CONNECTIONS TO BE A MINIMUM 2.4m BELOW FINISHED GRADE. WHERE COVER DEPTH CANNOT BE ACHIEVED INSULATE WATER SERVICE AS PER CITY STANDARD W22.
10. SANITARY AND STORM SEWER CONNECTIONS TO BE A MINIMUM 2.0m BELOW GRADE AND 2% SLOPE (MIN. 1%).
11. BACKWATER VALVES ARE TO BE INSTALLED AS PER CITY STANDARDS S14, S14.1 AND S14.2.
12. EXCAVATIONS FOR SERVICES SHOULD BE SLOPED IN ACCORDANCE WITH THE REQUIREMENTS IN ONTARIO REGULATION 213/ 91 UNDER THE OCCUPATIONAL HEALTH AND SAFETY ACT.
13. THE CONTRACTOR IS TO CONFIRM ELEVATIONS OF EXISTING SEWERS PRIOR TO COMMENCING WORK.
14. THE CONTRACTOR SHALL CONFIRM EXISTING INFRASTRUCTURE TO PREVENT DAMAGE AND IDENTIFY CONFLICTS WITH PROPOSED INFRASTRUCTURE PRIOR TO COMMENCEMENT OF CONSTRUCTION. THE ENGINEER SHALL BE INFORMED IMMEDIATELY OF ANY ERRORS, OMISSIONS OR CONFLICTS THAT ARE FOUND.
15. NO CHANGES SHALL BE MADE TO THE EXISTING GRADES OUTSIDE OF THE PROPERTY LIMITS UNLESS OTHERWISE SHOWN.
16. PRIOR TO HOUSE CONSTRUCTION ALL ORGANIC AND FILL MATERIALS SHALL BE REMOVED FROM THE BUILDING AND RETAINING WALL EXCAVATED AREAS TO THE SATISFACTION OF THE GEOTECHNICAL ENGINEER.
17. MANAGEMENT OF ANY EXCESS MATERIALS SHALL BE IN ACCORDANCE WITH OPSS 180.
18. EXISTING ELEVATIONS ARE TO BE MAINTAINED AT THE BASE OF ANY TREES TO BE PRESERVED.
19. ALL GROUND SURFACES SHALL BE EVENLY GRADED WITHOUT PONDING AREAS AND WITHOUT LOW POINTS EXCEPT WHERE APPROVED SWALES ARE PROVIDED.
20. REFER TO ARCHITECTURAL PLANS FOR BUILDING DIMENSIONS AND SITE LAYOUT.
21. ROOF DOWNSPOUTS ARE TO BE DIRECTED TO GRASSED AREAS.
22. NO EXCESS DRAINAGE SHALL BE DIRECTED ONTO NEIGHBOURING PROPERTY.
23. SERVICING AS PER CITY STANDARD S11.3.
24. SANITARY SERVICES SHALL BE PVC SDR 28.
25. SANITARY SERVICE CONNECTIONS SHALL BE MADE AT OR ABOVE SPRINGLINE ELEVATION OF EXISTING SANITARY SEWER.
26. SANITARY SERVICE CONNECTIONS SHALL BE MADE IN ACCORDANCE WITH CITY STANDARD S11.1 FOR FLEXIBLE MAIN SEWER PIPE.
27. WATER SERVICES SHALL BE COPPER TYPE 'K' OR APPROVED MATERIAL.
28. SERVICES THROUGH THE FOUNDATION/FOOTING SHALL BE SLEEVED.
29. USF ELEVATIONS ARE BASED ON A 9 FOOT BASEMENT.
30. ALL HOUSES WILL REQUIRE THE INSTALLATION OF A SUMP PUMP FOR THE STORM SERVICE LATERAL.
31. SUMP PUMPS SHALL DISCHARGE TO A SPLASH BLOCK AT THE REAR OF THE HOUSE.
32. SILT FENCE SHALL BE INSTALLED WHERE INDICATED AND MAINTAINED IN GOOD ORDER.
33. SILT SACKS SHALL BE INSTALLED UNDER THE FRAME AND COVER OF ALL PROPOSED AND EXISTING CATCH BASINS AND MAINTAINED IN GOOD ORDER.
34. EROSION AND SEDIMENT CONTROL MEASURES SHALL BE INSTALLED PRIOR TO CONSTRUCTION AND MAINTAINED IN GOOD ORDER UNTIL VEGETATION HAS BEEN RE-ESTABLISHED IN ALL DISTURBED AREAS.
35. DURING THE COURSE OF CONSTRUCTION, IF THE ENGINEER BELIEVES THAT ADDITIONAL PREVENTION METHODS ARE REQUIRED TO MANAGE EROSION AND SEDIMENTATION, THE CONTRACTOR SHALL INSTALL ADDITIONAL CONTROLS AS REQUIRED TO THE SATISFACTION OF THE ENGINEER.
36. THE CONTRACTOR SHALL IMPLEMENT BEST MANAGEMENT PRACTICES, TO PROVIDE FOR PROTECTION OF THE AREA DRAINAGE SYSTEM DURING CONSTRUCTION ACTIVITIES. THE CONTRACTOR ACKNOWLEDGES THAT FAILURE TO IMPLEMENT APPROPRIATE EROSION AND SEDIMENT CONTROL MEASURES MAY BE SUBJECT TO PENALTIES IMPOSED BY ANY APPLICABLE REGULATORY AGENCY.
37. REFER TO EROSION AND SEDIMENT CONTROL RECOMMENDATIONS NOTED IN THE EIS, PREPARED BY GEMTEC, DATED AUG. 11, 2020.
38. DISTURBED AREAS SHALL BE REINSTATED WITH 150mm TOPSOIL AND SOD.
39. REFERENCE GEOTECHNICAL INVESTIGATION, PREPARED BY PATERSON GROUP, REPORT NO. PG5408-1, DATED JUNE 24, 2020.

NOT FOR CONSTRUCTION

NOTES

THE POSITION OF ALL POLE LINES, CONDUITS, WATERMAINS, SEWERS AND OTHER UNDERGROUND AND OVERGROUND UTILITIES AND STRUCTURES IS NOT NECESSARILY SHOWN ON THE CONTRACT DRAWINGS, AND WHERE SHOWN, THE ACCURACY OF THE POSITION OF SUCH UTILITIES AND STRUCTURES IS NOT GUARANTEED. BEFORE STARTING WORK, DETERMINE THE EXACT LOCATION OF ALL SUCH UTILITIES AND STRUCTURES AND ASSUME ALL LIABILITY FOR DAMAGE TO THEM.

GEODETIC SURVEY DERIVED FROM COSINE STATION 0011988U501. LOCATION DESCRIPTION: STITTSVILLE – DEEP BENCH MARK IN MANHOLE IN A SMALL PARK AT JCT OF HAZELDEAN RD AND MAIN ST N, 37.9 M N OF C/L OF NEIL AVE, 20.9 M SW OF SW CORNER OF A BOARD (WELCOME TO STITTSVILLE), 12.8 M NW OF POWER POLE NO. 7203, AT RD LEVEL. DATUM: CGVD28:78, FIRST ORDER, ELEVATION: 113.360. COORDINATE SYSTEM: MTM ZONE 9; NAD 83 DATUM (CAN83-9)

NO.	REVISION DESCRIPTION	DATE	BY
3	REVISED PER COMMENTS	10/11/20	SMC
2	REVISED PER COMMENTS	30/10/20	SMC
1	ISSUED FOR REZONING	02/09/20	SMC

SCALE
0 2m 4m 6m
HORIZONTAL 1:200

Robinson Land Development
350 Palladium Drive
Ottawa, ON K2V 1A8
(613) 592-6060 rcii.com

DESIGN	BLM
CHECKED	SMC
DRAWN	BLM
CHECKED	SMC
APPROVED	SMC

AMBERWOOD VILLAGE RECREATION ASSOCIATION (AVRA)

AMBERWOOD ESTATES
54 SPRINGBROOK DRIVE
OTTAWA, ON

SERVICING AND GRADING PLAN

PROJECT No.	20041
SURVEY	RLD
DATED	NOV. 2020
DWG. No:	20041-SG1

Photograph 1: Air photo showing the Right of Way (ROW) of Trailway Circle adjacent to the eastern boundary of the Site. Note that although portions of the canopy of some trees overhang the ROW, there are no tree stems found growing within the ROW adjacent to the eastern boundary of the Site (Air Photo taken from City of Ottawa (2020)).

Photograph 2: Looking north at the Right of Way (ROW) of Trailway Circle. Note that although portions of the canopy of some trees overhang the ROW, there are no tree stems found growing within the ROW adjacent to the eastern boundary of the Site (June 19th, 2020).

3.0 DISTINCTIVE TREES

As described in Section 3.3.1 of the Combined Environmental Impact Statement (EIS) and Tree Conservation Report (TCR), four (4) trees were found within the Site that are each ≥50 cm diameter at breast height (dbh) in size (MES 2020). The City of Ottawa definition of Distinctive Trees includes any trees that are ≥50 cm dbh in size. Section 3.3.1 and Section 4.1 of the Combined EIS and TCR argued that the four (4) trees which exceed 50 cm dbh in size should not be considered Distinctive Trees, due to the fact that each tree is either a planted landscaping feature, a non-native species, and/or a fast growing species that reaches 50 cm dbh in size at a comparatively young age. It should be noted that the rationale provided in Section 3.3.1 and Section 4.1 of the Combined EIS and TCR is not consistent with the City of Ottawa's definition of Distinctive Trees, which identifies Distinctive Trees based solely on their size. As such, the fact that the four (4) trees which exceed 50 cm dbh in size are each either planted landscaping features, non-native species, and/or fast growing species, does not impact their ability to qualify as Distinctive Trees under the City of Ottawa's definition. Therefore, the four (4) trees which exceed 50 cm dbh in size should be understood to qualify as Distinctive Trees. The locations of the four (4) Distinctive Trees are shown below in Figure 2. The potential retention of trees within the Site is discussed above in the previous section.

FIGURE 2: DISTINCTIVE TREE LOCATIONS

Combined Environmental Impact Statement & Tree Conservation Report
54 Springbrook Drive, Ottawa, ON

McKINLEY ENVIRONMENTAL SOLUTIONS

- Tree Survey Area
- Approximate Development Limits
- Trees ≥50 cm dbh

Please Note: This is not a legal land survey. All dimensions and locations are shown as approximate. dbh = Diameter at Breast Height.

4.0 GOLF COURSE PONDS

As shown in Figure 3 (below), several ponds are found northwest of the Site within the Amberwood Golf and Country Club. In Section 3.4 of the Combined Environmental Impact Statement (EIS) and Tree Conservation Report (TCR), as well as elsewhere throughout the report, the ponds were referred to as 'Stormwater Management Ponds'. It should be noted that it is not known whether the ponds were designed to provide stormwater management functions and/or whether the ponds are subject to an existing Environmental Compliance Approval (ECA). Due to the fact that it is unknown whether or not the ponds provide Stormwater Management functions, the ponds have been relabeled in Figure 3 as 'Golf Course Ponds' (see below). Throughout the Combined EIS and TCR, all instances where the ponds within the adjacent Amberwood Golf and Country Club were referred to as 'Stormwater Management Ponds' should be understood to be corrected to read as 'Golf Course Ponds'. The description of the Golf Course Ponds included in Section 3.4 of the Combined EIS and TCR is otherwise unchanged.

Regardless of whether or not the Golf Course Ponds were engineered to provide Stormwater Management functions, the features are clearly artificial in origin, and were likely built for aesthetic/landscaping purposes as part of the golf course. As described in Section 3.4 of the Combined EIS and TCR, the Golf Course Ponds occur approximately 94 m from the nearest part of the Site. As such, the Site is sufficiently separated from the Golf Course Ponds so that no significant impacts to those features are likely to occur as a result of the proposed development. Due to the distance between the Golf Course Ponds and the Site, the Golf Course Ponds were not investigated in detail as part of the Combined EIS and TCR (MES 2020).

McKINLEY ENVIRONMENTAL SOLUTIONS

November 2020

FIGURE 3: ADJACENT FEATURES

Combined Environmental Impact Statement & Tree Conservation Report
54 Springbrook Drive, Ottawa, ON

- Tree Survey Area - Approximate Development Limits

Please Note: This is not a legal land survey. All dimensions and locations are shown as approximate.

5.0 SPECIES AT RISK

The potential Species at Risk (SAR) list for the Geographic Township of March was included in Appendix B of the Combined Environmental Impact Statement (EIS) and Tree Conservation Report (TCR). However, the Site occurs within the Geographic Township of Goulbourn. The potential SAR list for the Geographic Township of Goulbourn is attached to this letter. The majority of SAR identified in the two (2) lists overlap, and therefore the discussion of SAR included in Section 3.7 of the Combined EIS and TCR addresses the majority of species included on both lists (MES 2020). In addition to those SAR which were previously addressed in Section 3.7 of the Combined EIS and TCR, the following additional species are listed for the Geographic Township of Goulbourn:

- **Bogbean Buckmoth (endangered):** The Bogbean Buckmoth is restricted to open fens with low shrub cover and large amounts of Bogbean plants (SARO 2020). As described in Section 3.4 of the Combined EIS and TCR, there are no fens found in close proximity to the Site. As such, Bogbean Buckmoth is unlikely to be a significant concern for the proposed development.
- **Eastern Prairie Fringed Orchid (endangered):** The Eastern Prairie Fringed Orchid is found in tamarack swamps in the Ottawa area (SARO 2020). As described in Section 3.4 of the Combined EIS and TCR, there are no tamarack swamps found in close proximity to the Site. As such, Eastern Prairie Fringed Orchid is unlikely to be a significant concern for the proposed development.
- **Gypsy Cuckoo Bumblebee (endangered):** The Gypsy Cuckoo Bumblebee is known from the Ottawa area from historic occurrences only. Most recent sightings of the species within Ontario are from the Pinery Provincial Park near Sarnia (SARO 2020). As such, Gypsy Cuckoo Bumblebee is unlikely to be a significant concern for the proposed development.
- **Red Headed Woodpecker (special concern):** Red Headed Woodpeckers live in open woodlands and along woodland edges (SARO 2020). Within the Ottawa area, most sightings of the species occur in the Constance Bay area. The Cultural Woodlot that is found within the Site is too small to be likely to provide significant habitat functions for Red Headed Woodpecker. As such, Red Headed Woodpeckers are unlikely to be a significant concern for the proposed development.
- **Yellow Rail (special concern):** Yellow Rails are secretive birds that live in marshes and shallow wetlands (SARO 2020). In the Ottawa area, Yellow Rails are rarely found, although sporadic sightings from the Malborough Forest/Richmond Fen have been reported. As described in Section 3.4 of the Combined EIS and TCR, there are no wetland habitats within the Site. The Site is sufficiently separated from the Stittsville Wetland Complex and the Golf Course Ponds so that no significant impacts to those features are likely to result from the development (refer to Section 3.4 of the Combined EIS and TCR for additional detail). As such, Yellow Rails are unlikely to be a significant concern for the proposed development.

As described above, none of the five (5) additional SAR identified on the potential SAR list for the Geographic Township of Goulbourn are likely to be a significant concern for the proposed development.

Section 3.7.1 of the Combined EIS and TCR noted that the development of the Site will result in the removal of a comparatively small area of non-functional potential Category 3 Blanding's Turtle habitat. Section 4.4.1 of the Combined EIS and TCR concluded that the development proposal involves comparatively minor Blanding's Turtle Category 3 habitat impacts, which are very similar to other projects that have recently been reviewed by the Ministry of Environment, Conservation, and Parks (MECP) and which have been determined to not require an Overall Benefit Permit under the Ontario Endangered Species Act (ESA) (e.g. 788 March Road and 762 March Road). In their first submission review comments, the City of Ottawa noted that municipal policy requires the extent of Blanding's Turtle habitat and the associated regulatory requirements to be reviewed/confirmed by the MECP. The Ontario ESA *Information Gathering Form* will be prepared and submitted to the MECP in order to facilitate their review of the proposed development. Once received, the results of the MECP review will be forwarded to the City of Ottawa.

6.0 CLOSURE

The purpose of this letter is to provide additional information in order to respond to the first submission review comments received from the City of Ottawa. This letter serves as Addendum #1 to the Combined Environmental Impact Statement (EIS) and Tree Conservation Report (TCR) (MES 2020). This letter report is intended to provide supplemental information that expands upon the Combined EIS and TCR (MES 2020). This letter report is intended to be read in conjunction with MES (2020). For brevity, all methods, results, description of natural heritage features, mitigation requirements, and recommendations which were adequately addressed in MES (2020) are not discussed in this letter. Refer to MES 2020 for any additional information not discussed in this Addendum #1.

Pending that the regulatory, mitigation, and avoidance measures outlined in this letter are implemented appropriately, in addition to those outlined in MES (2020), the development of the Site is not anticipated to have a significant negative effect on the natural features and functions.

We trust that the above information is sufficient; should you have any questions or require further information, please do not hesitate to contact the undersigned, at your convenience.

Sincerely,

Dr. Andrew McKinley, EP, RP Bio.
Senior Biologist, McKinley Environmental Solutions

McKINLEY ENVIRONMENTAL SOLUTIONS
613-620-2255
mckinleyenvironmental@gmail.com
www.mckinleyenvironmental.com

7.0 REFERENCES

City of Ottawa (2020) Geo-Ottawa Municipal Mapping Site. Retrieved November 17th, 2020 at <http://maps.ottawa.ca/geoottawa/>

McKinley Environmental Solutions (MES) (2020) Combined Environmental Impact Statement and Tree Conservation Report – 54 Springbrook Drive, Ottawa, Ontario.

Ontario Ministry of Natural Resources and Forestry (OMNRF) (2010) OMNRF Natural Heritage Reference Manual for Natural Heritage Policies of the Provincial Policy Statement, 2005, Second Edition.

Species at Risk Ontario (SARO) (2020) Species at Risk Ontario. Retrieved November 17th, 2020 at <http://www.ontario.ca/environment-and-energy/species-risk-ontario-list>

APPENDIX A

Ontario Ministry of Natural Resources and Forestry (OMNRF) Potential Species at Risk List for the Geographic Township of Goulbourn

McKINLEY ENVIRONMENTAL SOLUTIONS
613-620-2255
mckinleyenvironmental@gmail.com
www.mckinleyenvironmental.com

FITZROY	GLOUCESTER	GOULBOURN
American Eel	American Eel	Bald Eagle
American Ginseng	American Ginseng	Bank Swallow
Bald Eagle	Bald Eagle	Barn Swallow
Bank Swallow	Bank Swallow	Blanding's Turtle
Barn Swallow	Barn Swallow	Bobolink
Blanding's Turtle	Black Tern	Bogbean Buckmoth
Bobolink	Blanding's Turtle	Butternut
Butternut	Bobolink	Chimney Swift
Canada Warbler	Butternut	Common Nighthawk
Chimney Swift	Canada Warbler	Eastern Meadowlark
Common Nighthawk	Channel Darter	Eastern Prairie Fringed Orchid
Eastern Meadowlark	Chimney Swift	Eastern Small-footed Myotis
Eastern Musk Turtle	Common Nighthawk	Eastern Whip-poor-will
Eastern Ribbonsnake	Eastern Meadowlark	Eastern Wood-pewee
Eastern Silvery Minnow	Eastern Musk Turtle	Gypsy Cuckoo Bumble Bee
Eastern Small-footed Myotis	Eastern Ribbon Snake	Horned Grebe
Eastern Whip-poor-will	Eastern Small-footed Myotis	Least Bittern
Eastern Wood-pewee	Eastern Whip-poor-will	Little Brown Myotis
King Rail	Eastern Wood-pewee	Loggerhead Shrike
Lake Sturgeon	Evening Grosbeak	Monarch
Least Bittern	Gypsy Cuckoo Bumble Bee	Northern Myotis
Little Brown Myotis	Henslow's Sparrow	Red-headed Woodpecker
Loggerhead Shrike	Hickorynut	Snapping Turtle
Monarch	Lake Sturgeon	Tri-colored Bat
Northern Map Turtle	Least Bittern	Wood Thrush
Northern Myotis	Little Brown Myotis	Yellow Rail
Olive-sided Flycatcher	Loggerhead Shrike	
Peregrine Falcon	Monarch	
Red-headed Woodpecker	Northern Brook Lamprey	
River Redhorse	Northern Map Turtle	
Short-eared Owl	Northern Myotis	
Snapping Turtle	Peregrine Falcon	
Transverse Lady Beetle	Red-headed Woodpecker	
Tri-colored Bat	River Redhorse	
Wood Thrush	Rusty Blackbird	
	Short-eared Owl	
	Silver Lamprey	
	Snapping Turtle	
	Spotted Turtle	
	Transverse Lady Beetle	
	Tri-colored Bat	
	Wood Thrush	