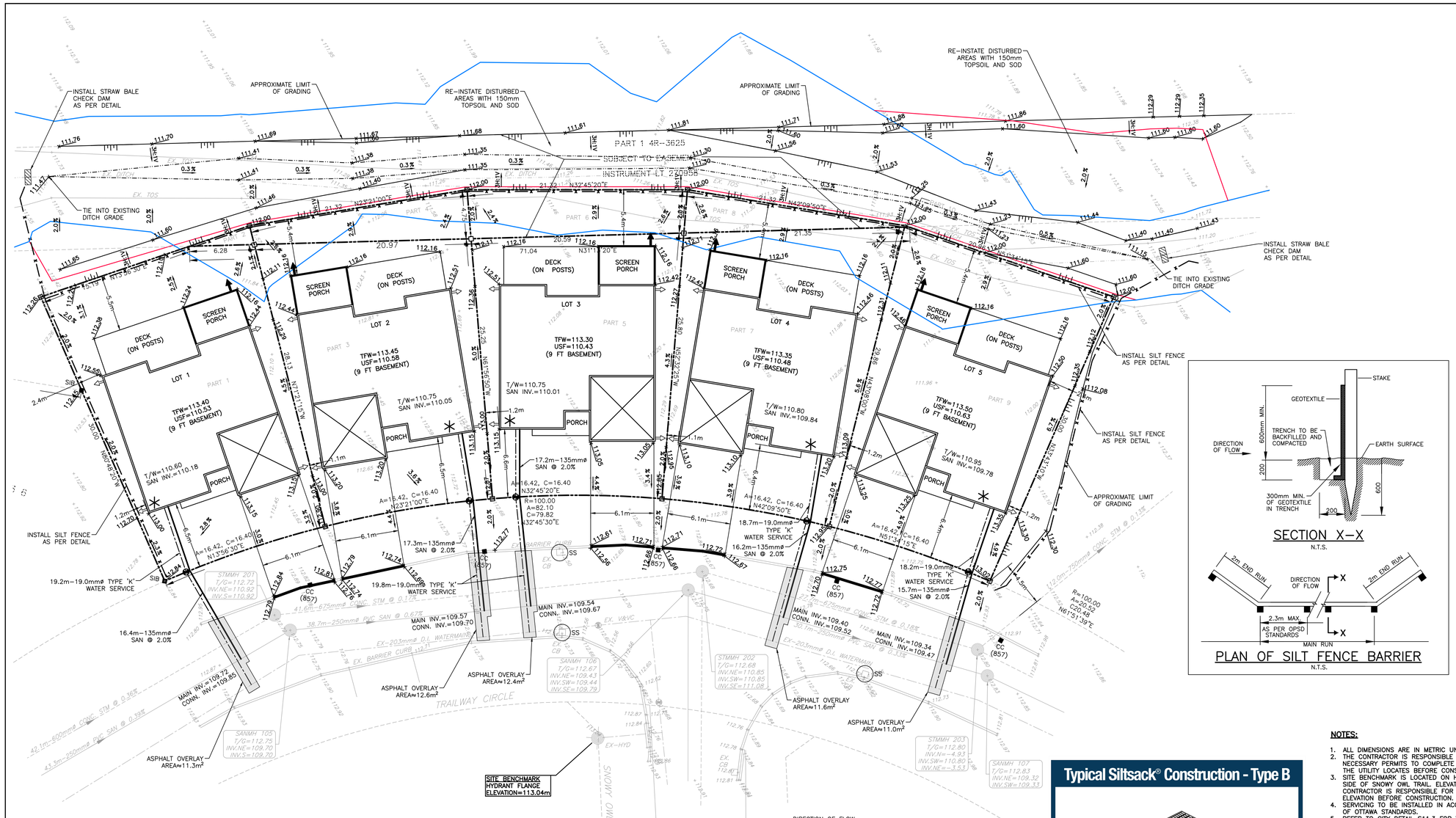

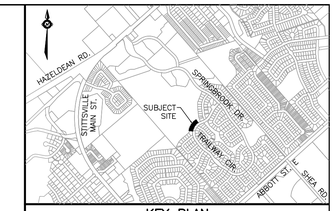

KEY PLAN

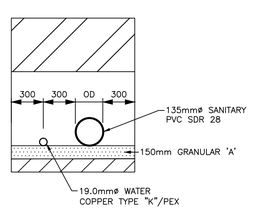

TYPICAL SERVICE TRENCH DETAIL
N.T.S.

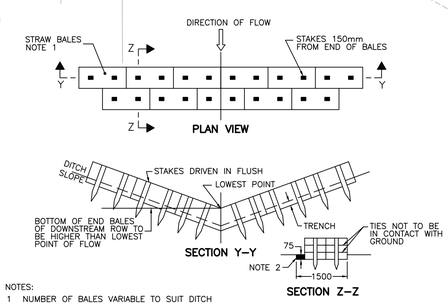

NOTES:
1 NUMBER OF BALES VARIABLE TO SUIT DITCH OR CHANNEL.
2 BALANCE OF EXCAVATED TRENCH TO BE BACKFILLED FOLLOWING BALE PLACEMENT.
3 ALL DIMENSIONS ARE IN MILLIMETERS OR METRES UNLESS OTHERWISE SHOWN.

SEDIMENT CONTROL STRAW BALE DETAIL
N.T.S.

Typical Siltsack® Construction - Type B

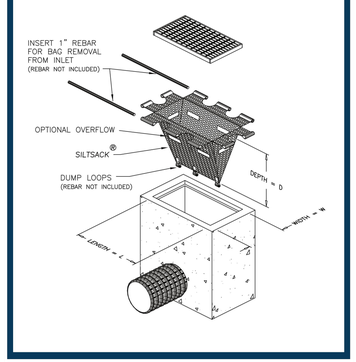

LEGEND

× 112.00	EXISTING ELEVATION
88.00	PROPOSED GRADE
2.0%	PROPOSED DRAINAGE SLOPE AND DIRECTION
	PROPERTY BOUNDARY
	CURB STOP & SERVICE POST
	WATER SERVICE
	SANITARY SERVICE
	EXISTING CATCH BASIN
	EXISTING STORM SEWER & MANHOLE
	EXISTING SANITARY SEWER & MANHOLE
	EXISTING WATERMAIN
	MVCA REGULATORY FLOODPLAIN (EL.=111.90m)
	REVISED MVCA REGULATORY FLOODPLAIN (EL.=111.90m)
	PROPOSED DITCH
	TERRACING (3H:1V MAX.)
	SUMP PUMP REQUIRED
	APPROXIMATE SUMP PUMP DISCHARGE AND SPLASH BLOCK
	APPROXIMATE ROOF DOWNSPOUT
TFW	TOP OF FOUNDATION WALL
USF	UNDERSIDE OF FOOTING
— x — x —	SILT FENCE
	STRAW BALE CHECK DAM
SS	SILT SACK

NOTES:

1. ALL DIMENSIONS ARE IN METRIC UNLESS OTHERWISE NOTED.
2. THE CONTRACTOR IS RESPONSIBLE FOR OBTAINING ALL THE NECESSARY PERMITS TO COMPLETE THE WORK AND TO COMPLETE THE UTILITY LOCATES BEFORE CONSTRUCTION.
3. SITE BENCHMARK IS LOCATED ON HYDRANT FLANGE ON SOUTH SIDE OF SNOWY OWL TRAIL. ELEVATION=113.04m. THE CONTRACTOR IS RESPONSIBLE FOR VERIFYING THE BENCHMARK ELEVATION BEFORE CONSTRUCTION.
4. SERVICING TO BE INSTALLED IN ACCORDANCE WITH CURRENT CITY OF OTTAWA STANDARDS.
5. REFER TO CITY DETAIL S11.3 FOR TYPICAL LOT SERVICING.
6. ALL DAMAGED AREAS WITHIN THE RIGHT-OF-WAY ARE TO BE REINSTATED TO EXISTING OR BETTER CONDITIONS.
7. ROAD CUTS SHALL BE SAW-CUT TO FORM A CLEAN STRAIGHT LINE. SERVICE TRENCH SHALL BE BACKFILLED TO MATCH EXISTING ROAD STRUCTURE IN ACCORDANCE WITH CITY STANDARD R10.
8. REINSTATE DAMAGED CURB AS PER CITY STANDARD SC1.1.
9. CITY WATER SERVICE CONNECTIONS TO BE A MINIMUM 2.4m BELOW FINISHED GRADE. WHERE COVER DEPTH CANNOT BE ACHIEVED INSULATE WATER SERVICE AS PER CITY STANDARD W22.
10. SANITARY AND STORM SEWER CONNECTIONS TO BE A MINIMUM 2.0m BELOW GRADE AND 2% SLOPE (MIN. 1%).
11. BACKWATER VALVES ARE TO BE INSTALLED AS PER CITY STANDARDS S14, S14.1 AND S14.2.
12. EXCAVATIONS FOR SERVICES SHOULD BE SLOPED IN ACCORDANCE WITH THE REQUIREMENTS IN ONTARIO REGULATION 213/ 91 UNDER THE OCCUPATIONAL HEALTH AND SAFETY ACT.
13. THE CONTRACTOR IS TO CONFIRM ELEVATIONS OF EXISTING SEWERS PRIOR TO COMMENCING WORK.
14. THE CONTRACTOR SHALL CONFIRM EXISTING INFRASTRUCTURE TO PREVENT DAMAGE AND IDENTIFY CONFLICTS WITH PROPOSED INFRASTRUCTURE PRIOR TO COMMENCEMENT OF CONSTRUCTION. THE ENGINEER SHALL BE INFORMED IMMEDIATELY OF ANY ERRORS, OMISSIONS OR CONFLICTS THAT ARE FOUND.
15. NO CHANGES SHALL BE MADE TO THE EXISTING GRADES OUTSIDE OF THE PROPERTY LIMITS UNLESS OTHERWISE SHOWN.
16. PRIOR TO HOUSE CONSTRUCTION ALL ORGANIC AND FILL MATERIALS SHALL BE REMOVED FROM THE BUILDING AND RETAINING WALL EXCAVATED AREAS TO THE SATISFACTION OF THE GEOTECHNICAL ENGINEER.
17. MANAGEMENT OF ANY EXCESS MATERIALS SHALL BE IN ACCORDANCE WITH OPSS 180.
18. EXISTING ELEVATIONS ARE TO BE MAINTAINED AT THE BASE OF ANY TREES TO BE PRESERVED.
19. ALL GROUND SURFACES SHALL BE EVENLY GRADED WITHOUT PONDING AREAS AND WITHOUT LOW POINTS EXCEPT WHERE APPROVED SWALES ARE PROVIDED.
20. REFER TO ARCHITECTURAL PLANS FOR BUILDING DIMENSIONS AND SITE LAYOUT.
21. ROOF DOWNSPOUTS ARE TO BE DIRECTED TO GRASSED AREAS.
22. NO EXCESS DRAINAGE SHALL BE DIRECTED ONTO NEIGHBOURING PROPERTY.
23. SERVICING AS PER CITY STANDARD S11.3.
24. SANITARY SERVICES SHALL BE PVC SDR 28.
25. SANITARY SERVICE CONNECTIONS SHALL BE MADE AT OR ABOVE SPRINGLINE ELEVATION OF EXISTING SANITARY SEWER.
26. SANITARY SERVICE CONNECTIONS SHALL BE MADE IN ACCORDANCE WITH CITY STANDARD S11.1 FOR FLEXIBLE MAIN SEWER PIPE.
27. WATER SERVICES SHALL BE COPPER TYPE 'K' OR APPROVED MATERIAL.
28. WATER SERVICES SHALL CROSS EXISTING SEWERS IN ACCORDANCE WITH CITY STANDARD W38.
29. SERVICES THROUGH THE FOUNDATION/FOOTING SHALL BE SLEEVED.
30. USF ELEVATIONS ARE BASED ON A 9 FOOT BASEMENT.
31. ALL HOUSES WILL REQUIRE THE INSTALLATION OF A SUMP PUMP FOR THE STORM SERVICE LATERAL.
32. SUMP PUMPS SHALL DISCHARGE TO A SPLASH BLOCK AT THE REAR OF THE HOUSE.
33. SILT FENCE SHALL BE INSTALLED WHERE INDICATED AND MAINTAINED IN GOOD ORDER.
34. SILT SACKS SHALL BE INSTALLED UNDER THE FRAME AND COVER OF ALL PROPOSED AND EXISTING CATCH BASINS AND MAINTAINED IN GOOD ORDER.
35. EROSION AND SEDIMENT CONTROL MEASURES SHALL BE INSTALLED PRIOR TO CONSTRUCTION AND MAINTAINED IN GOOD ORDER UNTIL VEGETATION HAS BEEN RE-ESTABLISHED IN ALL DISTURBED AREAS.
36. DURING THE COURSE OF CONSTRUCTION, IF THE ENGINEER BELIEVES THAT ADDITIONAL PREVENTION METHODS ARE REQUIRED TO MANAGE EROSION AND SEDIMENTATION, THE CONTRACTOR SHALL INSTALL ADDITIONAL CONTROLS AS REQUIRED TO THE SATISFACTION OF THE ENGINEER.
37. THE CONTRACTOR SHALL IMPLEMENT BEST MANAGEMENT PRACTICES, TO PROVIDE FOR PROTECTION OF THE AREA DRAINAGE SYSTEM DURING CONSTRUCTION ACTIVITIES. THE CONTRACTOR ACKNOWLEDGES THAT FAILURE TO IMPLEMENT APPROPRIATE EROSION AND SEDIMENT CONTROL MEASURES MAY BE SUBJECT TO PENALTIES IMPOSED BY ANY APPLICABLE REGULATORY AGENCY.
38. REFER TO EROSION AND SEDIMENT CONTROL RECOMMENDATIONS NOTED IN THE EIS AND TCR REPORT ADDENDUM #1, PREPARED BY MCKINLEY ENVIRONMENTAL SOLUTIONS, DATED NOV. 18, 2020.
39. DISTURBED AREAS SHALL BE REINSTATED WITH 150mm TOPSOIL AND SOD.
40. REFERENCE GEOTECHNICAL INVESTIGATION, PREPARED BY PATERSON GROUP, REPORT NO. PG5408-1, DATED NOVEMBER 9, 2020.

NOT FOR CONSTRUCTION

NOTES

THE POSITION OF ALL POLE LINES, CONDUITS, WATERMAINS, SEWERS AND OTHER UNDERGROUND AND OVERGROUND UTILITIES AND STRUCTURES IS NOT NECESSARILY SHOWN ON THE CONTRACT DRAWINGS, AND WHERE SHOWN, THE ACCURACY OF THE POSITION OF SUCH UTILITIES AND STRUCTURES IS NOT GUARANTEED. BEFORE STARTING WORK, DETERMINE THE EXACT LOCATION OF ALL SUCH UTILITIES AND STRUCTURES AND ASSUME ALL LIABILITY FOR DAMAGE TO THEM.

GEODETIC SURVEY DERIVED FROM COSINE STATION 0011988U501. LOCATION DESCRIPTION: STITTSVILLE – DEEP BENCH MARK IN MANHOLE IN A SMALL PARK AT JCT OF HAZELDEAN RD AND MAIN ST N, 37.9 M N OF C/L OF NEIL AVE, 20.9 M SW OF SW CORNER OF A BOARD (WELCOME TO STITTSVILLE), 12.8 M NW OF POWER POLE NO. 7203, AT RD LEVEL. DATUM: CGVD28:78, FIRST ORDER, ELEVATION: 113.360. COORDINATE SYSTEM: MTM ZONE 9; NAD 83 DATUM (CAN83-9)

NO.	REVISION DESCRIPTION	DATE	BY
3	REVISED PER COMMENTS	18/11/20	SMC
2	REVISED PER COMMENTS	30/10/20	SMC
1	ISSUED FOR REZONING	02/09/20	SMC

SCALE
0 2m 4m 8m
HORIZONTAL 1:200

LICENSED PROFESSIONAL ENGINEER S. M. CZARNOTSKI Nov. 20, 2020 PROVINCE OF ONTARIO

Robinson Land Development
350 Palladium Drive
Ottawa, ON K2V 1A8
(613) 592-6060 rcii.com

DESIGN	BLM
CHECKED	SMC
DRAWN	BLM
CHECKED	SMC
APPROVED	SMC

AMBERWOOD VILLAGE RECREATION ASSOCIATION (AVRA)

AMBERWOOD ESTATES
54 SPRINGBROOK DRIVE
OTTAWA, ON

SERVICING AND GRADING PLAN

PROJECT No.	20041
SURVEY	RLD
DATED	NOV. 2020
DWG. No:	20041-SG1