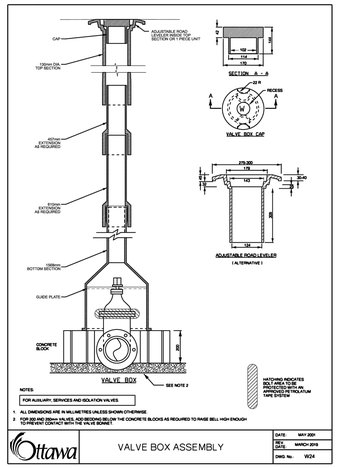

Ottawa | VALVE BOX ASSEMBLY | DATE: MAY 2001 | REV. DATE: MARCH 2019 | DWG. No. W24

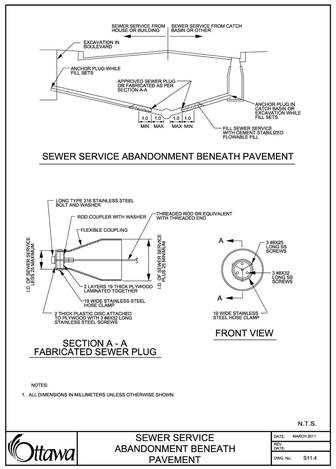

Ottawa | SEWER SERVICE ABANDONMENT BENEATH PAVEMENT | DATE: MARCH 2011 | REV. DATE: | DWG. No.: S11.4

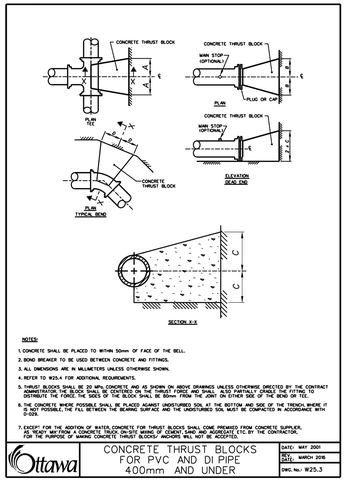

Ottawa | CONCRETE THRUST BLOCKS FOR PVC AND DI PIPE 400mm AND UNDER | DATE: MAY 2001 | REV. DATE: MARCH 2016 | DWG. No.: W23.3

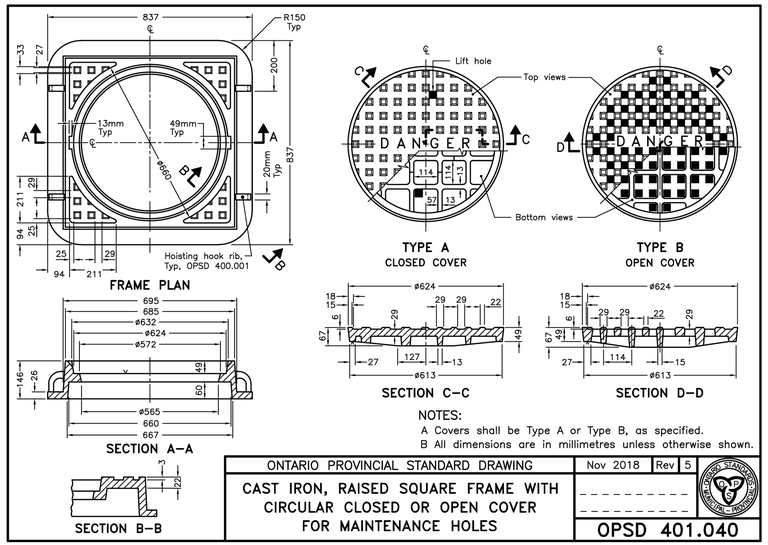

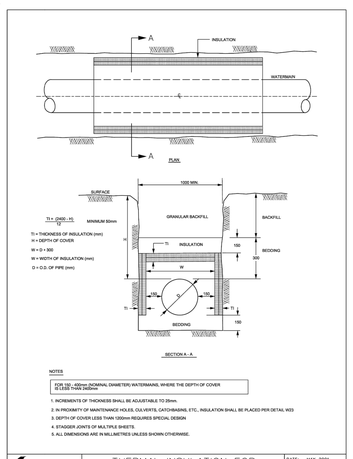

Ottawa | THERMAL INSULATION FOR WATERMAINS IN SHALLOW TRENCHES | DATE: MAY 2001 | REV. DATE: MARCH 2013 | DWG. No.: W22

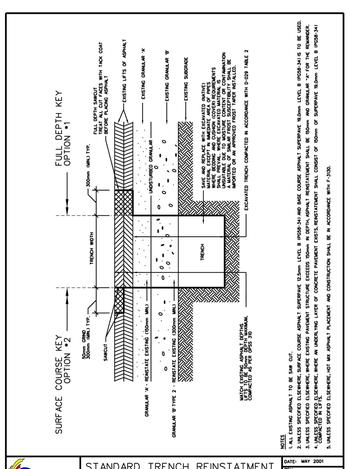

Ottawa | STANDARD TRENCH REINSTATEMENT IN PAVED SURFACE | DATE: MAY 2001 | REV. DATE: MARCH 2017 | DWG. No.: R10

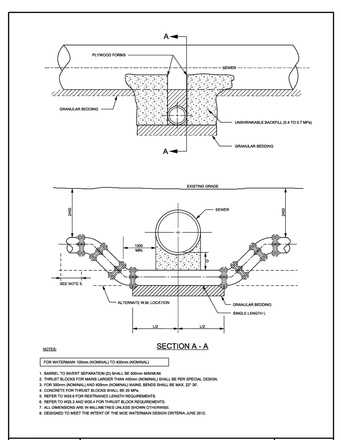

Ottawa | WATERMAIN CROSSING BELOW SEWER | DATE: MAY 2001 | REV. DATE: MARCH 2013 | DWG. No.: W25

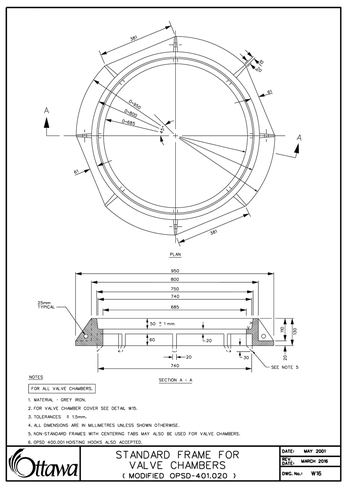

Ottawa | STANDARD FRAME FOR VALVE CHAMBERS (MODIFIED OPSD-401.020) | DATE: MAY 2001 | REV. DATE: MARCH 2016 | DWG. No.: W15

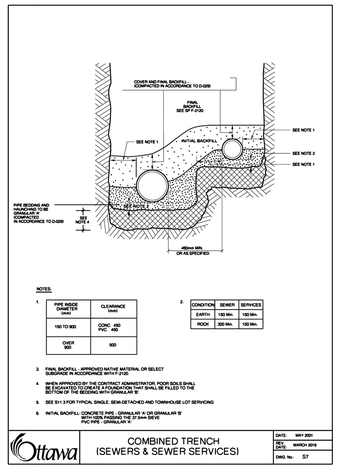

Ottawa | COMBINED TRENCH (SEWERS & SEWER SERVICES) | DATE: MAY 2001 | REV. DATE: MARCH 2019 | DWG. No. S7

Stantec

Stantec Consulting Ltd.
400 - 1331 Clyde Avenue
Ottawa ON
Tel. 613.722.4420
www.stantec.com

Copyright Reserved

The Contractor shall verify and be responsible for all dimensions. DO NOT scale the drawing - any errors or omissions shall be reported to Stantec without delay.
The Copyrights to all designs and drawings are the property of Stantec. Reproduction or use for any purpose other than that authorized by Stantec is forbidden.

Revision	By	Appd.	YY.MM.DD
1 ISSUED FOR REVIEW	JP	PM	26.05.08

File Name: 160402175.FSG.dwg	Dwn.	Chkd.	Dsgn.	YY.MM.DD
	JP	DT	JP	26.04.26

Permit-Seal

Client/Project
BERTONE MANAGEMENT INC.

1345 BASELINE ROAD

Ottawa, ON

Title
FUNCTIONAL DETAILS SHEET

Project No.	Scale	
160402175	AS SHOWN	
Drawing No.	**Sheet**	**Revision**
DS-1	3 of 6	1

W:\active\160402175\design\drawings\functional_Design\160402175.FSG.dwg
2026/05/08 2:13 PM By: Patarg, Jupiter

ORIGINAL SHEET - ARCH D