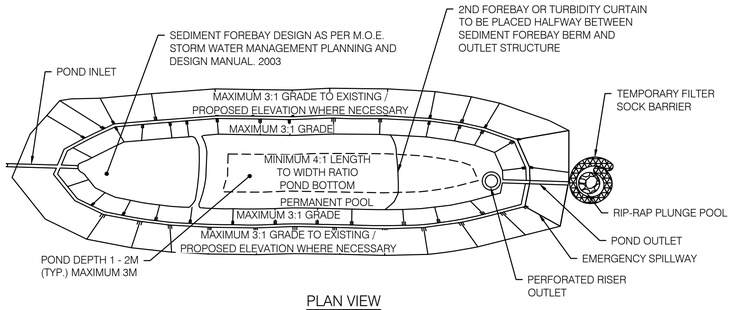

PLAN VIEW

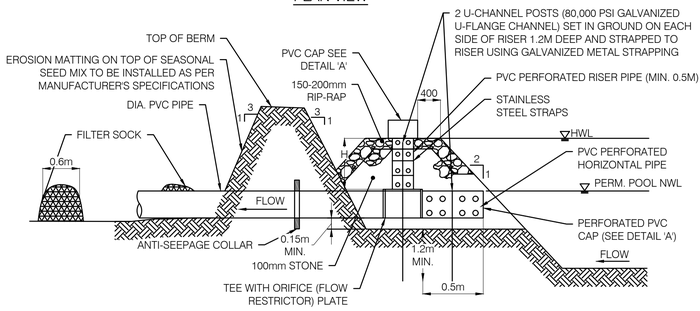

ELEVATION

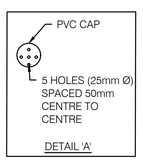

DETAIL 'A'

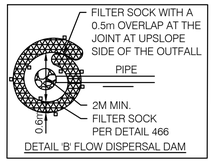

DETAIL 'B' FLOW DISPERSAL DAM

NOTES:
1. POND SIDE SLOPES TO BE STABILIZED IMMEDIATELY;
2. MINIMUM 48 HOUR DRAWDOWN TIME WITH MINIMUM 75mm DIAMETER ORIFICE;
3. ACTIVE STORAGE VOLUME: SHOULD BE DESIGNED WITH A MINIMUM OF 125m³/HECTARE CONTRIBUTING DRAINAGE AREA WITH A MINIMUM 48 HOUR DRAWDOWN TIME (MINIMUM 75mm DIAMETER ORIFICE) AND MINIMUM 4:1 L:W POND RATIO; AND,
4. PERMANENT POOL VOLUME:
   4.1. MINIMUM 125m³/HECTARE DRAINAGE AREA; OR
   4.2. MINIMUM 185m³/HECTARE DRAINAGE AREA IF L:W RATIO IS LESS THAN 4:1 OR THE DRAWDOWN TIME FOR THE ACTIVE STORAGE IS LESS THAN 48 HOURS.

TEMPORARY SEDIMENT CONTROL POND
SCALE: N.T.S.

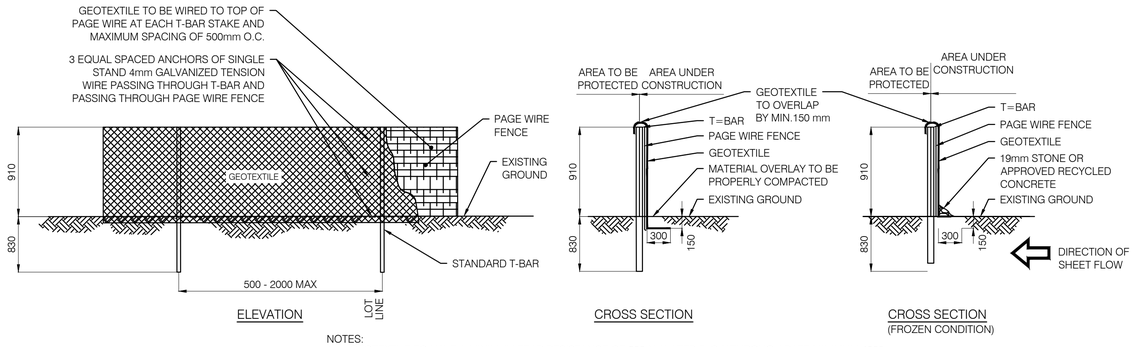

ELEVATION

CROSS SECTION

CROSS SECTION (FROZEN CONDITION)

NOTES:
1. GEOTEXTILE TO HAVE A MINIMUM TEAR RESISTANCE OF 200 N. WATER FLOW THROUGH RATE MINIMUM 4000 L/MIN/M² AND UV STABILITY MIN 70% AT 500H.
2. GEOTEXTILE TO HAVE A HORIZONTAL OVERLAP OF 1000mm AT JOINTS.
3. PAGE WIRE FENCE OR APPROVED EQUIVALENT AS BACKING FOR GEOTEXTILE FILTER FABRIC.
4. GEOTEXTILE TO BE FASTENED TO T-BAR AND PAGE WIRE FENCE VIA METAL ZIP-TIES, 4mm GALVANIZED TENSION WIRE, OR EQUIVALENT.
5. MIN. 1.5m OFFSET FOR DOUBLE ROW SEDIMENT CONTROL FENCE.

TEMPORARY SINGLE ROW SEDIMENT CONTROL FENCE
SCALE: N.T.S.

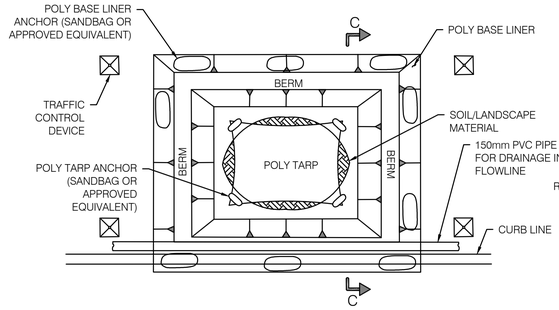

PLAN VIEW

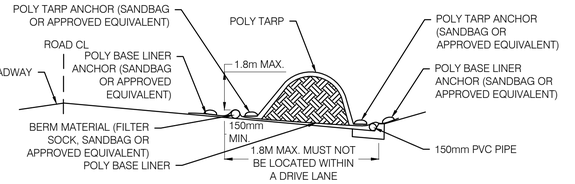

CROSS SECTION C-C MATERIALS STAGING IN ROADWAY

NOTES:
1. SEE PLAN VIEW FOR
   - LOCATION OF MATERIAL STAGING AREA(S).
   - CONTRACTOR MAY ADJUST LOCATION AND SIZE OF STAGING AREA WITH APPROVAL FROM THE CITY.
2. FEATURE MUST BE INSTALLED PRIOR TO EXCAVATION, EARTHWORK OR DELIVERY OF MATERIALS.
3. MATERIALS MUST BE STATIONED ON THE POLY BASE LINER. ANY INCIDENTAL MATERIALS DEPOSITED ON PAVED SECTION OR ALONG CURB LINE MUST BE CLEANED UP PROMPTLY.
4. POLY BASE LINER AND TARP COVER SHOULD BE OF SIGNIFICANT THICKNESS TO PREVENT DAMAGE OR LOSS OF INTEGRITY.
5. FEATURE IS NOT INTENDED FOR USE WITH WET MATERIAL THAT WILL BE DRAINING AND/OR SPREADING OUT ON THE POLY LINER OR FOR DEMOLITION MATERIALS.

TEMPORARY STOCKPILE WITH TARP
SCALE: N.T.S.

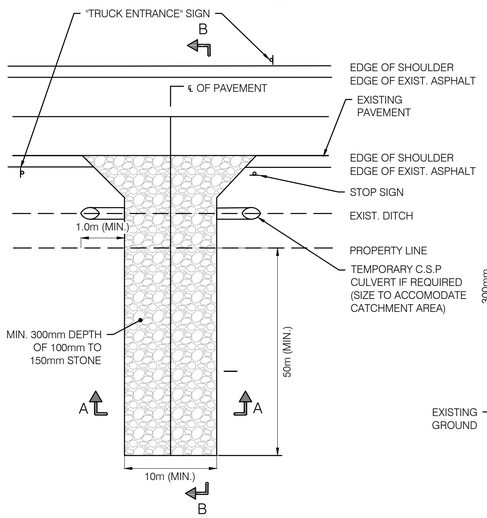

PLAN VIEW

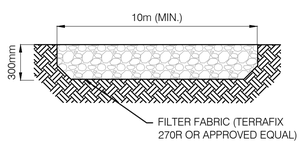

SECTION A-A

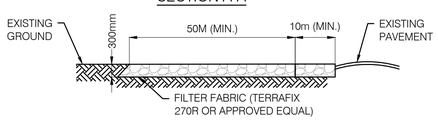

SECTION B-B SIDE ELEVATION

MUD MAT FOR TEMPORARY CONSTRUCTION ACCESS DETAIL
SCALE: N.T.S.

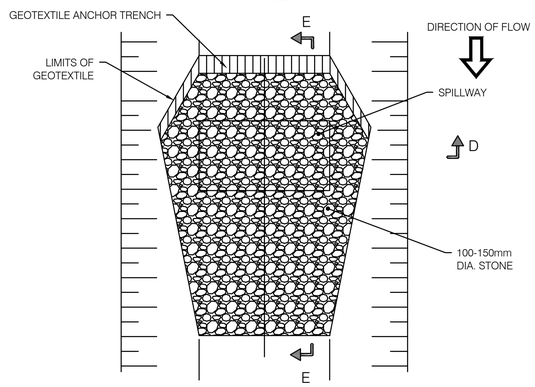

PLAN VIEW

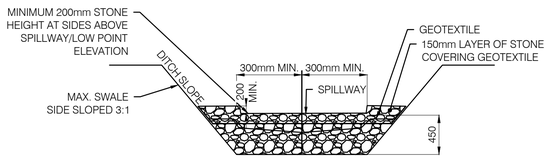

SECTION D-D

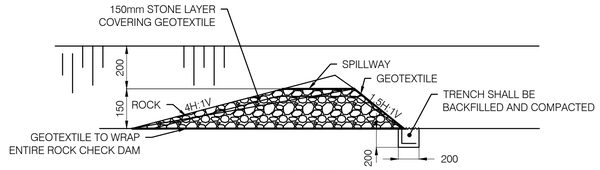

SECTION E-E

TEMPORARY ROCK CHECK DAM FLAT BOTTOM SWALE
SCALE: N.T.S.

NOTES:
1. ALL STONE AND GEOTEXTILE TO BE REMOVED AFTER THE CONSTRUCTION PROCESS.
2. COLLECTED SEDIMENT MUST BE REMOVED AND SWALE REBUILT WITH CLEANED STONE AND NEW GEOTEXTILE ONCE SEDIMENT REACHES HALFWAY TO THE LOW POINT OF THE SPILLWAY.

FOR PERMITTING

DRAWING No.	DESCRIPTION	REV	DESCRIPTION	PREPARED BY	CHECKED BY	DATE
		AC	FOR PERMITTING	E. AMELI	M. SHAHRAKI	2025-06-19
		AB	FOR COMMENTS	E. AMELI	M. SHAHRAKI	2025-06-06
7154024-300000-47-D20-0001-02	TRAIL BESS - 150 MW - 230 kV - 34.5 kV SUBSTATION	AA	FOR COMMENTS	E. AMELI	M. SHAHRAKI	2025-03-03

REFERENCE DRAWINGS — REVISIONS

SEAL: LICENSED PROFESSIONAL ENGINEER — E. AMELI 100617996 — PROVINCE OF ONTARIO — 2025-06-19

CLIENT: Evolugen by Brookfield Renewable

PROJECT: SOUTH MARCH BESS
2555 AND 2625 MARCHURST RD, OTTAWA

TITLE: CIVIL
EROSION AND SEDIMENT CONTROL DETAILS

DESIGNED BY: E.AMELI	DRAFTED BY: S. PARK		
PREPARED BY: E.AMELI	CHECKED BY: M.SHAHRAKI		
SCALE: AS SHOWN	DATE: 2025-02-27		
DRAWING No.: 7154023-100000-41-D70-0002	SHEET: 01	SIZE: A1	REV. AC

BY:JAMES, DONNA
PRINTED:2025-06-19 2:17:04 PM