david schaeffer engineering ltd

120 Iber Road, Suite 103
Ottawa, Ontario K2S 1E9
Tel. (613)836-0856
Fax (613) 836-7183
www.DSEL.ca

FUNCTIONAL SERVICING REPORT

FOR

CAIVAN GREENBANK NORTH INC.

PROPOSED RESIDENTIAL SUBDIVISION

3713 BORRISOKANE ROAD

CITY OF OTTAWA

PROJECT NO.: 19-1123

MAY 13, 2020
1ST SUBMISSION
© DSEL

FUNCTIONAL SERVICING REPORT
FOR
CAIVAN GREENBANK NORTH INC.

PROPOSED RESIDENTIAL SUBDIVISION
(3713 BORRISOKANE ROAD)

PROJECT NO: 19-1123

TABLE OF CONTENTS

TABLES **3**

1.0 INTRODUCTION **1**
1.1 Existing Conditions 1

2.0 GUIDELINES, PREVIOUS STUDIES, AND REPORTS **2**
2.1 Existing Studies, Guidelines, and Reports 2

3.0 WATER SUPPLY SERVICING **4**
3.1 Existing Water Supply Services 4
3.2 Water Supply Servicing Design 4
3.3 Adjacent The Ridge (Brazeau) Lands Watermain Design 7
3.4 Water Supply Conclusion 7

4.0 WASTEWATER SERVICING **8**
4.1 Existing Wastewater Services 8
4.2 Wastewater Design 8
4.2.1 MSS Sanitary Flows 9
4.2.2 Wastewater Design Criteria 10
4.3 Wastewater Servicing Conclusion 11

5.0 STORMWATER CONVEYANCE **12**
5.1 Existing Stormwater Drainage 12
5.2 Proposed Stormwater Management Strategy 12
5.2.1 Infiltration – Etobicoke Exfiltration System (EES) 14
5.2.2 EES Temporary Monitoring 15
5.3 Stormwater Pond Location/Configuration 15
5.4 Post-Development Stormwater Management Targets 16
5.4.1 Quality Control 17
5.4.2 Quantity Control 18

© DSEL

5.5 Stormwater Management Design 18
5.5.1 Borrisokane Road – Ministry of Transportation Requirements 19
5.6 Proposed Minor System 19
5.7 Hydraulic Grade Line Analysis 21
5.8 Proposed Major System 21
5.9 Proposed Grading 21
5.10 Stormwater Servicing Conclusions 22

6.0 CONCLUSION AND RECOMMENDATIONS 23

© DSEL

TABLES

Table 1A Water Supply Design Criteria (System Level Demands)
Table 1B Water Supply Design Criteria (Typical)
Table 1C Estimated Water Demands - Brazeau Land Updates
Table 2 BSUEA MSS Sanitary Flows Summary
Table 3 Wastewater Design Criteria
Table 4 Storm Sewer Design Criteria

APPENDICES

Appendix A Figure 1 – Key Plan
Figure 2 - Proposed Development Concept
Letter of Aggregate Licence Surrender - MNRF

Appendix B Excerpts from JLR Master Servicing Study
Drawing 4 – Drummond - Watermain Servicing Plan
GeoAdvice Boundary Condition Schematic

Appendix C Excerpts from JLR Master Servicing Study
- Master Sanitary Drainage Area (MSAN)
- Table 6-3 & 6-4

Drawing No 3 – Drummond – Functional Sanitary Servicing Plan
Drummond Lands - Sanitary Design Sheet (DSEL, May 2020)
The Ridge (Brazeau) - Sanitary Design Sheet (DSEL, April 2020)
The Ridge (Brazeau) - Sanitary Drainage Plan No. 82 (April 2020)

Appendix D Excerpts from JLR Master Servicing Study
- Figure 3-1
- Table 5-2 & 5-5
- Master Storm Drainage Plan (MST-2)

Paterson – Groundwater Infiltration Review (Memo)
JFSA – The Ridge (Brazeau) Low Impact Development (LID) Design example
Drawing No. 2 – Drummond – Functional Storm Servicing Plan
Drummond Storm Design Sheet (DSEL, December 2019)
Drummond/Brazeau SWM Pond Drawings and Outfall
Excerpts from ***BSUEA MSS*** (Section 5 excerpts)
Half Moon Bay West – Drawing No. 42 (External Post-Development Storm Drainage Plan)

Appendix E Drawing No. 5 – Drummond - Functional Grading Plan

© DSEL

FUNCTIONAL SERVICING REPORT
FOR
CAIVAN GREENBANK NORTH INC.

PROPOSED RESIDENTIAL SUBDIVISION
(3713 BORRISOKANE ROAD)

CITY OF OTTAWA
PROJECT NO: 19-1123

1.0 INTRODUCTION

David Schaeffer Engineering Limited (DSEL) has been retained to prepare a Functional Servicing Report (FSR) in support of a future residential subdivision at 3713 Borrisokane Road within an area previously referred to as the "Drummond Lands" on behalf of Caivan Greenbank North Inc. (CGNI).

The proposed Drummond Lands development area is located at 3713 Borrisokane Road within the Barrhaven South Urban Expansion Area (***BSUEA***). As illustrated in ***Figure 1*** (see ***Appendix A***) the site is located north of Barnsdale Road, east of Highway 416 (and Borrisokane Road), south of Cambrian Road and west of the Future Greenbank Road alignment. The prior zoning was Mineral Extraction (ME) and is proposed to be amended to permit low-rise residential uses. The western portion of the property is outside of the urban boundary and is subject to a separate site plan application (referred to as the "ABIC site" with a proposed assembly plant and administration building) and zoning for a proposed stormwater management (SWM) block. The eastern portion of the property (approximately 20.3 ha) is within the urban boundary and will be rezoned for residential use. The lands are planned to be developed with a mix of detached single homes, townhomes, park blocks and a road network (see ***Figure 2*** for the proposed draft plan in ***Appendix A***).

The objective of this report is to provide sufficient detail to demonstrate that the proposed development area can be supported by municipal services.

1.1 Existing Conditions

The Drummond Lands property was previously an aggregate extraction pit and was operated in accordance with the Ontario Aggregate Resources Act and Regulations. The license has now been surrendered/retired through consultation with required agencies. The confirmation of the surrender from the Ministry of Natural Resources and Forestry is provided in ***Appendix A*** for reference.

 © DSEL

The property ground surface is significantly disturbed as a result of the mineral extraction activities that have occurred over the years with stockpiles of materials at various locations and elevations. The eastern portion of the site, adjacent to the Future Greenbank Road future alignment, ranges in elevation from approximately 96.3m to 104.8m. On-site elevations vary due to the various stockpiles of materials but are general ranging from 102.0m to 106.0m. Drainage is generally conveyed westward towards Borrisokane Road which is owned by, and under the jurisdiction of, the Ministry of Transportation.

The property is within the Jock River watershed and is under the jurisdiction of the Rideau Valley Conservation Authority (RVCA).

2.0 GUIDELINES, PREVIOUS STUDIES, AND REPORTS

2.1 Existing Studies, Guidelines, and Reports

The following studies were utilized in the preparation of this report.

- Ottawa Sewer Design Guidelines,
  City of Ottawa, *SDG002,* October 2012
  (Sewer Design Guidelines)
  - Technical Bulletin ISDTB-2014-01
    City of Ottawa, February 5, 2014
    (ITSB-2014-01)
  - Technical Bulletin PIEDTB-2016-01
    City of Ottawa, September 6, 2016
    (PIEDTB-2016-01)
  - Technical Bulletin ISTB-2018-01
    City of Ottawa, March 21, 2018
    (ISTB-2018-01)
  - Technical Bulletin ISTB-2018-04
    City of Ottawa, June 27, 2018
    (ISTB-2018-04)
- Ottawa Design Guidelines – Water Distribution
  City of Ottawa, July 2010.
  (Water Supply Guidelines)
  - Technical Bulletin ISD-2010-2
    City of Ottawa, December 15, 2010.
    (ISD-2010-2)

© DSEL

- Technical Bulletin ISDTB-2014-2
  City of Ottawa, May 27, 2014.
  (ISDTB-2014-2)
- Technical Bulletin ISTB-2018-02
  City of Ottawa, March 21, 2018
  (ISTB-2018-02)

- Design Guidelines for Sewage Works,
  Ministry of the Environment, Conservation and Parks, 2008. (formerly MOECC)
  (MECP Design Guidelines*)*
- Highway Drainage Design Standards (MTO 2008)
- Drainage Management Manual (MTO 1997),
  Ministry of Transportation.
  (MTO Manuals)
- Stormwater Planning and Design Manual,
  Ministry of the Environment, March 2003.
  (SWMP Design Manual)
- City of Ottawa Official Plan,
  adopted by Council 2003.
  (Official Plan)
- South Nepean Collector: Phase 2 Hydraulics Review / Assessment Technical Memorandum
  Novatech, August 2015
  (Novatech SNC Memo)
- Master Servicing Study – Barrhaven South Urban Expansion Area, J.L. Richards & Associates Limited, Revision 2, May 2018
  (BSUEA MSS)
- Servicing Brief – Quinn's Pointe Residential Stages 2, 3 & 4, J.L. Richards & Associates Limited, Revision 1, October 2018 (File No. 26610-001.1)
  (Quinn's Pointe Brief)
- Design Brief for the Clarke Stormwater Management Pond
  JFSA and DSEL, October 19, 2017
  (*Clarke SWM PDB*)
- Jock River Reach One Subwatershed Study
  Stantec, 2007
  (Jock River SWS)

© DSEL

- Design Brief for Caivan Communities – The Ridge (Brazeau Lands), April 28, 2020 (File No. 18-1030)
  (Brazeau Design Brief)

3.0 WATER SUPPLY SERVICING

3.1 Existing Water Supply Services

The ***BSUEA MSS*** provided an overview of the existing watermain infrastructure associated with the BSUEA. An assessment of the water supply for the area was completed to examine the feasibility of the extension of existing infrastructure that would meet the required City and MECP criteria for the whole of the development area.

The 'Master Watermain" plan (Drawing MWM) from the ***BSUEA MSS*** is provided in ***Appendix B*** and illustrates the existing watermains in proximity to the Drummond Lands as well as a schematic alignment through the Drummond property. The anticipated watermain servicing connections points for the Drummond Lands are as follows:

- Existing 300mm diameter watermain from the east terminating at Dundonald Drive and the Future Greenbank Road alignment (proposed to be extended as part of the Brazeau Lands (The Ridge) development (D07-16-19-0005);
- Proposed 300mm diameter watermain on Delphinus Avenue within the Tamarack Meadows development area (north of the Drummond Lands) which was previously proposed to extend up the western side of the Drummond property to service the Brazeau Lands to the south. This watermain is fed from the existing 400mm diameter Cambrian Road watermain;
- Proposed 300mm diameter watermain from The Ridge development area to the south at "Elevation Road" in that site design layout.

3.2 Water Supply Servicing Design

The ***BSUEA MSS*** presents overall watermain infrastructure details for the BSUEA. The subject property was deemed serviceable and the ***MSS*** reviewed a number of servicing scenarios (i.e. existing and built-out conditions) that confirmed that the area could be adequately serviced conforming to relevant City and MECP Guidelines and Policies. At the time of detailed design any required easements or land crossing permissions will be obtained to support the water supply infrastructure.

The proposed water servicing layout is presented in ***Drawing 4*** in ***Appendix B***. The Drummond Lands development area will require a minimum of two watermain feeds to the service the property initially. The advancement of adjacent development areas and

© DSEL

their associated watermain networks/sizing will ultimately dictate the preferred connection locations based on where those future terminations will be.

Based on the nearby existing infrastructure, and surrounding development plans, it is proposed that the extension of the existing Dundonald Drive 300mm watermain (proposed as part of the Brazeau Lands development detailed design) will provide service to the southeast portion of the property. The other service points will be from the future Tamarack Meadows development to the north (at Delphinius Avenue) and from the Elevation Road and various connections to the watermain proposed along 'Expansion Road' again from the Brazeau Lands development design. See ***Drawing 4*** for reference. Other optional future connections to Future Greenbank Road (when available) can be made for additional system redundancy if deemed necessary.

The ***BSUEA MSS*** detailed various scenarios for the watermain network and at the time of detailed design, detailed hydraulic modelling will be undertaken to verify that the proposed on-site, and any off-site, watermains are in conformance with all relevant criteria for the development area as a whole or based on any phased development.

The water analysis contained in the ***BSUEA MSS*** utilized system level water demands as developed by the City due to the fact that the number of units and densities resulted in an overall population that would exceed 3,000. The system level demands listed in Table 7-1 of the ***MSS*** can be found in ***Appendix B*** and are summarized as follows:

Table 1A: Water Supply Design Criteria (System Level Demands)

Land Use Type	Consumption Rate
JLR BSUEA MSS, May 2018 for Population Exceeding 3000 Persons	
Single Family Residential	180 L/cap/day
Multi-unit Residential (Townhouse / Back to Back)	198 L/cap/day
Apartment Residential	219 L/cap/day
Commercial	50,000 L/ha/day
Institutional	50,000 L/ha/day
Outdoor Water Demand	1049 L/unit/day (single detached)

At the detailed design stage, if desired by the City, the typical Water Supply Design Criteria to be used is as summarized in the following table:

Table 1B: Water Supply Design Criteria (Typical)

Design Parameter	Value
Extracted from Section 4: Ottawa Design Guidelines, Water Distribution (July 2010)	
Residential – Detached Single	3.4 p/unit
Residential – Townhome/ Semi	2.7 p/unit
Residential – Apartment	1.8 p/unit

© DSEL

Minimum Watermain Size	150 mm diameter
Minimum Depth of Cover	2.4 m top of watermain to finished grade
Normal operating conditions desired operating pressures	350 kPa and 480kPa
During fire flow operating pressure must not drop below	140 kPa

Alternatively, the MECP Design Criteria will be used to calculate water demands during detailed design.

The estimated water demands within the ***BSUEA MSS*** were summarized in Table 7-2 (excerpt found in ***Appendix B***). The table summarized a total population of 958 for the Drummond Lands development area along with some commercial and institutional components. Based on the current development concept the water demand table would need to be refined to reflect a revised residential unit count and the removal of the commercial, institutional and high density components since only single family homes and townhomes are proposed. Based on the current development concept illustrated in ***Figure 2*** the development area is proposed to have approximately 141 single family homes and 439 towns with associated populations of 480 and 1186 respectively (1666 total). The adjusted water demands are summarized in the following table:

Table 1C: Estimated Water Demands – Drummond Land Updates

Design Parameter	Area (ha)	Units	Pop.	ADD SFH [1]	ADD MLT [2]	ADD APT [3]	ADD COM [4]	ADD INS [5]	Total BSDY	OWD [6]	Total MXDY
From Table 7-2 of MSS	10.78	320	958	1.25	0.69	0.15	0.33	0.72	3.14	2.14	5.28
Revised per Updated Concept Plan	20.3	580[7]	1666	1.00	2.72	0	0	0	3.72	1.71	5.43
		+260	+708						**+0.58**	-0.43	**+0.15**

1 Daily Demand, Single Family Homes, L/s (see Table 1A for Consumption Rate)
2 Average Daily Demand, Multi-Units (Townhouses and Back to Back Unit) L/s
3 Average Daily Demand, Apartment Units, L/s
4 Average Daily Demand, Commercial, L/s
5 Average Daily Demand, Institutional, L/s
6 Outdoor Water Demand, L/s, calculated as 1,049 L per SFH unit per day as per MSS
7 Comprised of 141 Singles Family Homes and 439 Townhouses (maximum yield based on roadway frontages)

From Table 7-2 the overall Total BSDY for the Drummond Lands area increased by 0.58 L/s, which when compared to the Total BSDY from Table 7.2 (for the noted areas) represents a 3.1% increase over the previous 18.66 L/s. The total MXDY increases by 0.15 L/s which is a 0.5% increase over the previous 31.48 L/s total (for the noted areas).

Fire flow requirements are to be confirmed in accordance with Local Guidelines (Fire Underwriters Survey), City of Ottawa Water Supply Guidelines, and the Ontario Building Code, upon development of detailed concepts for the detached singles, townhomes, and the parks.

© DSEL

3.3 Adjacent The Ridge (Brazeau) Lands Watermain Design

A '*Hydraulic Capacity and Modeling Analysis'* was completed by GeoAdvice Engineering Inc. for the Brazeau Lands development area. The analysis was completed through the incorporation of boundary conditions provided by the City of Ottawa for connections at Cambrian Road, Brambling Way and Dundonald Drive (see the GeoAdvice layout schematic provided in ***Appendix B*** for reference). The analysis completed served to determine that the surrounding watermain networks proposed can deliver appropriate domestic flows at required pressure levels as well as required fire flows for those areas. At detailed design it will be further confirmed that the Drummond Lands can be adequately serviced also as anticipated.

3.4 Water Supply Conclusion

The subject lands have been reviewed within the ***BSUEA MSS*** for the ***BSUEA*** development areas. It is anticipated that Drummond Lands can be serviced by City of Ottawa infrastructure by the extension of existing watermains that are east of the property, extensions from the proposed The Ridge development and a future connection north of the property at the Tamarack Meadows development. At the time of detailed design the site will be subject to a detailed watermain analysis that will consider any adjacent system expansions and confirmation of any staged/interim infrastructure that may be required to facilitate development of the lands. The proposed water supply design will conform to all relevant City and MECP Guidelines and Policies and is generally consistent with the ***BSUEA MSS***.

© DSEL

4.0 WASTEWATER SERVICING

4.1 Existing Wastewater Services

Sanitary flows from the ***BSUEA*** were proposed to outlet to the existing 900mm diameter Greenbank Road sanitary trunk sewer. The existing South Nepean Collector (SNC) will provide the sanitary outlet for the entire Barrhaven South Community, which includes the ***BSUEA*** development area.

Trunk sanitary sewers exist north of the Drummond Lands area and are located along Cambrian Road (see JLR's *Master Sanitary Drainage Area* plan 'MSAN' in ***Appendix C***). The outlet connection point to existing sewers for the Drummond Lands is as follows:

- Existing 500 mm / 600 mm / 750 mm diameter sanitary trunk running east on Cambrian Road then extending north along existing Greenbank Road and east to the South Nepean Collector (SNC) trunk sewer. The current sewer termination is at the New Greenbank Road alignment.

As per the ***BSUEA MSS***, the subject property is tributary to the existing sanitary trunk sewer along Cambrian Road.

4.2 Wastewater Design

The subject property is planned to be serviced by an internal gravity sanitary sewer system that will generally follow the local road network with select servicing easements and land crossing permissions as required to achieve efficiencies in servicing and grading designs.

The ***BSUEA MSS*** indicated that the wastewater outlet from the Drummond Lands would be conveyed to Cambrian Road (MA11 to MA10) through Tamarack's "The Meadows Phase 7 & 8" (***Meadows***) development area at 3640 Greenbank Road (D07-16-18-0011). This ***MSS*** level alignment was chosen based on the anticipation that the development of the Meadows area would be well in advance of the Drummond Lands and that the sanitary outlet would be available. With the earlier advancement of the Drummond Lands (with the same approximate timing as Meadows) there are now alternative servicing options for the Drummond Lands as follows.

Through various consultations with City staff during the design process for The Ridge (Brazeau) development to the south, it is now proposed that the Drummond Lands can

© DSEL

outlet to the proposed sanitary sewer trunk along the Future Greenbank Road alignment proposed to service The Ridge development area. This Greenbank Road outlet for The Ridge is as per the ***MSS*** and was chosen due to that landowner not wanting to be dependent upon the advancement of the Drummond Lands in order to have a sanitary outlet through the Meadows as well. The Greenbank Road alignment allows for the optimization of sanitary sewer depths (i.e. minimizing depths) such that it mitigates any required groundwater pumping during construction and the potential for altered groundwater patterns that may occur with deeper permanent installations. Regardless of sewer depths, the standard implementation of clay barriers along servicing trenches will also be implemented per City requirements. The option of some portion of sanitary flows being conveyed through the Meadows property, in line with the ***MSS***, could be assessed further at the detailed design stage if it provides for further optimization of the sanitary sewer network.
The wastewater servicing plan (***Drawing 3***), design sheets and background ***BSUEA MSS*** information can all be found in ***Appendix C***.

4.2.1 MSS Sanitary Flows

In the ***BSUEA MSS***, Table 6-3 (provided in ***Appendix C***) summarized the anticipated flows from the Drummond and Brazeau land areas (including portions of the adjoining Mattamy property on the east side of Brazeau). The Mattamy lands adjacent to Future Greenbank Road consists of residential area of 1.92ha and commercial area of 2.68ha. With the more detailed draft plan layout for Brazeau, the site statistics were refined and the sanitary design sheet found in ***Appendix C*** more accurately reflects the anticipated sanitary flows for these areas. From Table 6-3 the following information is summarized:

Table 2: BSUEA MSS Sanitary Flows Summary

Land Area/Use	Area (ha)	Total Flow (2) (L/s)
Mattamy		
Commercial	2.13	1.8
Residential	1.92 (1)	2.37
Brazeau Lands		
School / Commercial / Residential	23.9	21.5
Drummond		
School / Commercial / Residential	20.3	17.8

© DSEL

	48.25	**43.47**

(1) The residential area was lumped in MSS Table 6-3. The 1.92ha is the area measured from the design plans in the current state and has prorated flows applied based on the Table 6-3 values (i.e. 1.92ha/35.26ha = 0.0545; Therefore flows = 0.0545x43.6L/s = 2.37L/s..
(2) Total flows from MSS Table 6-3 including infiltration

Therefore, from Table 6-3 of the ***MSS*** the sanitary flows from the Drummond, Brazeau and a portion of the Mattamy Lands drainage area was projected to be approximately ***43.47 L/s***. When applying the City of Ottawa wastewater design criteria to the development areas based on current draft plan layouts the total estimated peak sanitary flow from the areas assessed via The Ridge sanitary design sheet is approximately ***68.2 L/s*** (see ***Appendix C***) where the sanitary sewer flows all converge at proposed sanitary MH405A along Future Greenbank Road. The design sheet also shows the potential accommodation of future commercial areas flows from the western portion of the quarry properties. See the Brazeau Sanitary Design Sheet found in ***Appendix C***. This represents an increase of ***+24.73 L/s*** over the projected ***MSS*** flows from Table 6-3. This is within the minimum residual capacity of ***52.9 L/s*** in the downstream limiting pipe reach from MH 13A to MH 15A along Cambrian Road as summarized in Table 6-4 of the ***MSS*** (this table is provided in ***Appendix C*** for reference).

4.2.2 Wastewater Design Criteria

The following Table summarizes the City design guidelines and criteria applied in the preliminary sanitary design information above and detailed in ***Appendix C***.

Table 3: Wastewater Design Criteria

Design Parameter	Value
Current Design Guidelines	
Residential - Single Family / Townhome	3.4 p/unit & 2.7 p/unit respectively
Residential – Apartment	1.8 p/unit
Average Daily Demand	280 L/d/person
Peaking Factor	Harmon's Peaking Factor. Max 4.0, Min 2.0
Commercial / Institutional Flows	28,000 L/ha/day
Commercial / Institutional Peak Factor	1.5
Infiltration and Inflow Allowance	0.33 L/s/ha
Park Flows	28,000 L/ha/d
Park Peaking Factor	1.0
Sanitary sewers are to be sized employing the Manning's Equation	$Q = \frac{1}{n} A R^{2/3} S^{1/2}$
Minimum Sewer Size	200mm diameter
Minimum Manning's 'n'	0.013

© DSEL

Minimum Depth of Cover	2.5m from crown of sewer to grade
Minimum Full Flowing Velocity	0.6m/s
Maximum Full Flowing Velocity	3.0m/s
Extracted from Sections 4 and 6 of the City of Ottawa Sewer Design Guidelines, October 2012, and recent residential subdivisions in City of Ottawa.	

4.3 Wastewater Servicing Conclusion

The subject property will be serviced by local sanitary sewers which will outlet northward to future sanitary sewers proposed within the Future Greenbank Road right of way. The sewers convey flows to the existing sewers along Cambrian Road as demonstrated in the ***BSUEA MSS***. There is residual capacity in the downstream sewers providing sufficient capacity for the peak sanitary flows for the subject property.

© DSEL

5.0 STORMWATER CONVEYANCE

5.1 Existing Stormwater Drainage

The BSUEA is tributary to three sub-watersheds as depicted in the 'Figure 3-1' excerpt from the ***BSUEA MSS*** provided in ***Appendix D***. The Drummond Lands are within the Jock River Subwatershed.

Due to the prior land use for mineral extraction the majority of the land area is lower than the surrounding topography. As identified in the ***BSUEA MSS***, the BSUEA *Existing Condition Report* identified that the original drainage pattern for the development area was northwards via overland flow paths with no defined channels. Per the existing topography characterized within available City of Ottawa base mapping, flows from the subject property will be conveyed to two separate outlets:

1. Conveyed to the Jock River by storm systems (pipes and ditches as required) along Borrisokane Road.
2. Conveyed to the Clarke SWM Pond, within the Half Moon Bay (HMB) West lands, and from there discharged to the Jock River.

5.2 Proposed Stormwater Management Strategy

The future flows from the land area are planned to meet the following criteria per the ***BSUEA MSS***:

- Meet the existing flow in the downstream system;
- Meet the quality control target of 80% TSS removal as per the Jock River Reach One Subwatershed Study (Stantec, 2007); and,
- Preserve pre-infiltration condition levels (Section 5.3.4 of ***BSUEA MSS***)

In order to provide drainage conveyance to a Borrisokane Road storm outlet, the site grading will be adjusted to convey flows westward as much as practicable. The northeast portion of the Drummond property will drain to Future Greenbank Road given the site topography and the required grading elevation tie-in to the Future Greenbank Road ROW (i.e. to avoid a retaining wall along Greenbank Road).

© DSEL

As noted in the ***BSUEA MSS***, the *Existing Conditions Report* for the BSUEA identified that the culvert downstream of the aggregate properties (on the east side of Borrisokane Road) receives a pre-development flow of 1,300 L/s during the 1:100 year event (see Figure 3-1, and Tables 5-2 and 5-5 in ***Appendix D*** from the ECR noting the constrained culvert CVR-C1). This culvert will not actually be a constraint for the development since the proposed drainage conveyance from the site will be a storm sewer outlet along Borrisokane Road that will outlet to the west side ditch near the Cambrian Road and Borrisokane Road intersection. During detailed design, servicing of both properties will be developed such that the downstream pre-development flow is not exceeded via quantity control on-site. Any downstream systems should have sufficient capacity for the pre-development flow.

The ***BSUEA MSS*** conceptualized the following requirements for the development area:

- The design of the storm drainage system has been undertaken using the dual-drainage approach. The ***BSUEA MSS*** sets out the design criteria for future draft plan and site plan applications for the BSUEA.
- Two (2) separate storm servicing solutions were developed; one conventional servicing strategy and one that incorporates the Etobicoke Exfiltration System (EES) or alternative, which was recommended (see ***BSUEA MSS*** Drawing MST-2 for details and Section 5.2.1 of this report for discussion).
- The downstream boundary conditions or flow criteria to achieve are developed in the ***BSUEA MSS*** and are used in the design constraints.
- Allowable minor system release rates were set at the required storm event and future design should maintain the same release rate criteria.
- Stormwater management facilities have been identified as the stormwater management solution for the aggregate extraction areas.

The stormwater management design will consist of:

- A storm sewer system designed to capture at least the minimum design capture events required under PIETB-2016-01;
- For westerly flows, one dry Stormwater Management (SWM) Pond for quantity control along with Oil Grit Separator (OGS) units designed to provide Enhanced Level of Protection (80% total suspended solids (TSS) removal) per MECP guidelines. The SWM pond will provide controls to levels which respect any downstream pre-development levels. This single pond location was draft approved as part of the advancement of The Ridge (Brazeau) development application;
- For flows from the northeast portion of the site, storm sewers which will convey flows to the previously constructed Clarke Pond within HMB;

© DSEL

- An on-site road network designed to maximize the available storage in the on-site road network for the 100-year design event, where possible, with controlled release of stormwater to the minor storm system; and
- An overland flow route designed to safely convey stormwater runoff flows in excess of the on-site road storage.

5.2.1 Infiltration – Etobicoke Exfiltration System (EES)

Within the ***BSUEA MSS***, Section 5.4.4 discussed the recommendation of distributed infiltration for development areas. An analysis was carried out and summarized in the *Existing Conditions Report* which determined the various contributions of the water budget based on long-term simulation.

The section also notes that the overall pre-development infiltration from the ***BSUEA MSS*** area was determined but that the aggregate extraction areas were excluded in that determination. Ongoing investigations for both the Brazeau and Drummond properties have been completed and are summarized in the attached "*Groundwater Infiltration Review*" memorandum completed by Paterson Group (see ***Appendix D*** for reference). The memorandum summarizes the estimated infiltration rates that could be anticipated throughout the sites for various soil type conditions that were found during their investigations. These values will be used during the detailed design determinations.

Section 5.5 of the ***BSUEA MSS*** discusses the various storm servicing strategies for the development areas. The section went through the various options to achieve the required infiltration targets with the preferred arrangement being the Etobicoke Exfiltration System (EES) Infiltration Strategy. Other alternatives were reviewed, however the EES system is the most suitable for the site. A key point of note, as required by the ***MSS***, is that capture of stormwater by the exfiltration system will be strategically located insofar as the system is to be installed on local roads where the surface runoff is less impacted by the City's winter road salting program. Therefore collector and arterial roads will only have conventional storm sewer installations.

For the adjacent Ridge (Brazeau) development JFSA has prepared a "*The Ridge (Brazeau): Low Impact Development (LID) Design*" to assess the infiltration volumes anticipated for the EES system. See ***Appendix D*** for the analysis. A visual representation of the EES system and drainage capture areas can be seen in the *Figure 2* of the JFSA technical memorandum. The LID memo prepared is a detailed analysis that has every road segment, catchbasin, and storm sewer pipe incorporated into the modelling exercise. This level of detailed information is not available for the Drummond Lands at this FSR level, however, based on the latest work for the Brazeau site, there was a total EES infiltration surface area (bottom) of 2,110m² and 1,759 lineal meters of EES segments for the 27.058 ha of land assessed in that analysis (totals derived from

© DSEL

Table A1 of the JFSA analysis). Assuming the Drummond Lands will be built to a similar impervious level it is reasonable to assume that 78 m²/ha of EES infiltration surface area, or 65 lineal meters of EES per hectare of developed land will be required.

With the Drummond Lands site area of approximately 20.3 ha, this equates to approximately 1,320 lineal meters (65m x 20.3ha) of the EES required to achieve the infiltration target. Given that the site has approximately 2,900 lineal meters of local roads (16.5m ROW) there is more than twice the amount of ROW available to implement the required EES system. ***Drawing 2*** in ***Appendix D*** shows some conceptual EES locations for the Drummond Lands. It is noted that the Paterson field testing indicated that the Drummond site would infiltrate at 50 mm/hr (whereas Brazeau was 75mm/hr). However, the Brazeau analysis results showed a 46% infiltration rate when the target required is at 40%. It is anticipated that although the infiltration rates are different the excess extents of additional ROW length available, and the conservative nature of the Brazeau results, will more than compensate for the variation in the site parameters.

5.2.2 EES Temporary Monitoring

As per Section 5.5.1.8 of the ***BSUEA MSS*** there are requirements for temporary monitoring of the proposed infiltration system in order to assess and confirm that the EES operates as intended. The objectives of the monitoring will be to estimate the drawdown time of the EES (i.e. time for water levels to drop) to see if the infiltration values projected are in line with the results, and to determine the average rate of capture before runoff is conveyed by the traditional storm sewer system. The final locations and configuration will be coordinated with City staff through this detailed design process as it has been indicated that the City has vetted a “Smart Cover” arrangement through the advancement of the adjacent Minto development area.

5.3 Stormwater Pond Location/Configuration

The ***BSUEA MSS*** demonstrated a stormwater pond servicing scenario on each of the Drummond and Brazeau Lands outside of the urban development area (Refer to attached ‘*Barrhaven South Urban Expansion Area – Master Storm Drainage Plan EES’*) drawing ‘MST-2’ from the ***BSUEA MSS*** for illustration). However, this concept was proposed in the ***BSUEA MSS*** due to the desire at that time to not have the two properties ’linked’ and dependent upon one another in order to advance development.

As per the detailed design advancement of The Ridge (Brazeau) development to the south, the two properties have coordinated servicing strategies to the benefit of both landowners, and the City, as follows (refer to the *Drawing 1 – Storm Servicing Plan* in ***Appendix D***):

© DSEL

- The single pond option will be a dry facility with OGS units to treat stormwater requiring treatment. This is in line with the ***MSS***;
- If a pond was proposed within the Brazeau Lands location shown in the ***MSS***, it would have required a large box culvert outlet in order to convey emergency flow out to Borrisokane Road due to topography constraints. Based on an increase in elevation downstream of that outlet, the emergency flows could not be conveyed overland. With the single pond concept on the Drummond Lands, a box culvert would no longer be required due to the more suitable topography at the Drummond outlet and the associated availability of emergency relief;
- A single pond option keeps more infrastructure within the new development areas and minimizes infrastructure proposed within the Borrisokane Road right-of-way (ROW);
- In accordance with the City's typical preference, there will be a reduction in maintenance costs with one less facility to manage.

Detailed design plans for the dry SWM pond from The Ridge design submission are provided in ***Appendix D*** for reference.

5.4 Post-Development Stormwater Management Targets

Stormwater management requirements for the proposed alternative Stormwater management scheme have been adopted from the ***Jock River SWS***, ***City Standards***, and the ***MECP SWMP Manual***.

Given the general criteria mentioned above, the following specific standards are expected to be required for stormwater management within the subject property:

- Enhanced quality treatment will be provided for stormwater runoff from the subject property, corresponding to a long-term average TSS removal efficiency of 80%, as defined by the MECP prescribed treatment levels;
- Downstream receiving drainage features, culverts, and sewers will be assessed for responses to planned stormwater management outflows, and infrastructure rehabilitation or capacity improvement measures will be planned, as required;
- Storm sewers on local roads are to be designed to provide at least a 2-year level of service without any ponding per the City's latest Technical Bulletin PIEDTB-2016-01;
- Storm sewers on collector roads are to be designed to provide at least a 5-year level of service without any ponding per the City's latest Technical Bulletin PIEDTB-2016-01;
- For less frequent storms (i.e. larger than 2-year or 5-year), the minor system sewer capture will be restricted with the use of inlet control devices to prevent excessive hydraulic surcharges;

© DSEL

- Under full flow conditions, the allowable velocity in storm sewers is to be no less than 0.80 m/s and no greater than 6.0 m/s;
- For the 100-year storm and for all roads, the maximum depth of water (static and/or dynamic) on streets, rear yards, public space and parking areas shall not exceed 0.35 m at the gutter;
- The major system shall be designed with sufficient capacity to allow the excess runoff of a 100-year storm to be conveyed within the public right-of-way ROW, or adjacent to the ROW, provided the water level does not touch any part of the building envelope; must remain below all building openings during the stress test event (100-year + 20%); and must maintain 15 cm vertical clearance between spill elevation on the street and the ground elevation at the nearest building envelope;
- Flow across road intersections shall not be permitted for minor storms (generally 5-year or less);
- When catchbasins are installed in rear yards, safe overland flow routes are to be provided to allow the release of excess flows from such areas. A minimum of 30 cm of vertical clearance is required between the rear yard spill elevation and the ground elevation at the adjacent building envelope; and
- The product of the maximum flow depths on streets and maximum flow velocity must be less than 0.60 m^2/s on all roads.

5.4.1 Quality Control

5.4.1.1 Flows to Borrisokane Road ROW

Per the ***Jock River SWS,*** Enhanced quality treatment will be provided for stormwater runoff from the subject property, corresponding to a long-term average TSS removal efficiency of 80%, as described by the MECP prescribed treatment levels. This will be achieved via the proposed EES system installations and the end-of-line dry pond facility and the OGS units proposed.

5.4.1.2 Flows to Future Greenbank Road ROW

Flows to the northeast from the Drummond property will be treated within the existing Clarke Pond in HMB. As per the attached Moon Bay West – Drawing No. 42 (External Post-Development Storm Drainage Plan) associated with the ***Clarke SWM PDB,*** a portion of the Brazeau/Drummond properties were previously accounted for in the Clarke Pond design. Given that a portion of the tributary area (approximately 7 ha) is now being directed towards the new dry pond associated with the Brazeau/Drummond properties, the approximately 2.7 ha tributary to the Clarke Pond is easily accommodated. See the ***Clarke SWM PDB*** by JFSA under separate cover for full SWM facility details.

© DSEL

5.4.2 Quantity Control

5.4.2.1 Flows to Borrisokane Road ROW

As noted in the ***Jock River SWS***, quantity control is not required for the Jock River; however, based on past reports (***BSUEA MSS*** and Existing Condition Report), some quantity control will be provided to correlate to the quantified pre-development levels noted (i.e. 1,300 L/s) discussed in Section 5.2 of this report. This will assist with minimizing the proposed sizing of storm sewer infrastructure along Borrisokane Road as well as ensure that existing ditch capacities are not impacted. Any infrastructure upgrades or adjustments relating to the Borrisokane Road ROW will require appropriate permits and approvals from the Ministry of Transportation and/or City of Ottawa.

5.4.2.2 Flows to Future Greenbank Road ROW

Flows to the northeast from the Drummond property will be managed within the existing Clarke Pond in HMB. Quantity control is not required in the Clarke Pond; however, some is nonetheless provided by safe conveyance of the 100-year flows through the facility. See the ***Clarke SWM PDB*** by JFSA under separate cover for full SWM facility details. As noted previously, flows within the Drummond Lands will be managed by restriction of the minor system sewer capture with the use of ICDs to prevent hydraulic surcharges.

5.5 Stormwater Management Design

Drawing 2 shows termination nodes at the proposed dry stormwater management pond. As per The Ridge "*SWM Pond*" ***Drawing No. 76 & 78***, provided in ***Appendix D***, the design consists of OGS units for quality control and an end-of-line dry SWM pond for any required quantity control prior to discharge along Borrisokane Road. The pond will be located within the portion of the Drummond quarry land that is between the future Drummond residential area to be developed (within the urban boundary) and Borrisokane Road. The facility will be sized to meet the required level of quantity control based on a restricted outflow of 1,300 L/s as noted in Section 5.2.

In accordance with the Paterson ***Hydrogeological Review*** (under separate cover) for the area of the pond, the bottom elevation has been set at an elevation of 96.00m and will be lined as required to mitigate the inflow of perched groundwater in the area due to seasonal conditions.

The SWM pond will outlet to the Borrisokane Road roadside ditch. It is proposed that there will be a new 900mm/1200mm storm sewer installation along Borrisokane Road which extends northward to the vicinity of Cambrian Road where it discharges to the western roadside ditch. The proposed alignment was submitted via the City's Municipal

© DSEL

Consent process at the City's request. No significant concerns were raised with the proposal.

5.5.1 Borrisokane Road – Ministry of Transportation Requirements

Borrisokane Road, along the frontage of the Drummond Lands development area and northwards to Cambrian Road, is owned by, and under the jurisdiction of, the Ministry of Transportation. As such, any proposed underground stormwater infrastructure or grading/landscaping will require permits to facilitate the design and implementation of those works. At detailed design the appropriate permit applications will be submitted along with the required level of detail after further pre-consultation is held with appropriate staff within the Corridor Management Section.

Culverts:
For any stormwater flows outletting to any existing, or new, Borrisokane Road ROW culverts the stormwater management reporting will evaluate peak flow rates, velocities and headwater levels at pre- and post-development conditions for design and regulatory storms.

Ditches:
For any stormwater flows outletting to existing Borrisokane Road ROW ditches, the stormwater management reporting will evaluate peak flow rates, velocities and depth of flow at pre- and post-development conditions for design and regulatory storms.

Inlet Control Devices:
Insofar as the Ministry has indicated that they do not recognize any benefit from the attenuation of storm water runoff from inlet control devices, the SWM reporting will review conditions in the circumstance where on-site SWM measures do not operate as intended in order to evaluate potential impacts and summarize design contingencies as required.

5.6 Proposed Minor System

The subject property is expected to be serviced by an internal gravity storm sewer system that is to generally follow the local road network and servicing easements as required. The drainage will be conveyed within the underground piped sewer system to the proposed SWM pond with select areas of local streets that will have the ***EES*** installed to achieve infiltration targets.

Street catchbasins will collect drainage from the streets and front yards, while rear yard catchbasins will capture drainage from backyards. Perforated catch basin leads will be provided in rear yards, except the last segment where it connects to the right-of-way which will be solid pipe, per City standards.

© DSEL

The preliminary rational method design of the minor system captures drainage for storm events up to and including the 2-year (local) and 5-year (collector) event assuming the use of ICDs for all catchbasins within the subject property. The peak design flows are calculated based on an average predicted runoff coefficient (C-value) of 0.65 for the development areas and 0.25 for the grassed areas. As detailed design progresses, the runoff coefficients will be refined to reflect the proposed building envelopes, driveways and other details.

The following Table summarizes the standards that will be employed in the detailed design of the storm sewer network. The preliminary drainage area information can be found in ***Drawing 2*** and rational method design sheets are provided in ***Appendix D***.

Table 4: Storm Sewer Design Criteria

Design Parameter	Value
Minor System Design Return Period	1:2 yr (PIEDTB-2016-01) for local roads, without ponding 1:5 yr for collector roads, without ponding
Major System Design Return Period	1:100 year
Intensity Duration Frequency Curve (IDF) 2-year storm event: A=732.951 | B=6.199 | C=0.810 5-year storm event: A = 998.071 | B = 6.053 | C = 0.814	$i = \frac{A}{(t_c + B)^C}$
Minimum Time of Concentration	10 minutes
Rational Method	$Q = CiA$
Storm sewers are to be sized employing the Manning's Equation	$Q = \frac{1}{n} A R^{2/3} S^{1/2}$
Runoff coefficient for paved and roof areas	0.9
Runoff coefficient for landscaped areas	0.2
Minimum Sewer Size	250 mm diameter
Minimum Manning's 'n' for pipe flow	0.013
Minimum Depth of Cover	1.5 m from crown of sewer to grade
Minimum Full Flowing Velocity	0.8 m/s
Maximum Full Flowing Velocity	6.0 m/s
Clearance from 100-Year Hydraulic Grade Line to Building Opening	0.30 m
Max. Allowable Flow Depth on Municipal Roads	35 cm above gutter (PIEDTB-2016-01)
Extent of Major System	Contained within the ROW, or adjacent to the ROW, provided that the water level not touch any part of the building envelope and remains below the lowest building opening during the stress test event (100-year + 20%) and 15cm vertical clearance is maintained between spill elevation on the street and the ground elevation at the building envelope (PIEDTB-2016-01)
Stormwater Management Model	DDSWMM (release 2.1), SWMHYMO (v. 5.02) and XPSWMM (v. 10)

© DSEL

Design Parameter	Value
Model Parameters	Fo = 76.2 mm/hr, Fc = 13.2 mm/hr, DCAY = 4.14/hr, D.Stor.Imp. = 1.57 mm, D.Stor.Per. = 4.67 mm
Imperviousness	Based on runoff coefficient (C) where Percent Imperviousness = (C - 0.2) / 0.7 x 100%.
Design Storms	Chicago 3-hour Design Storms and 24-hour SCS Type II Design Storms. Max. Intensity averaged over 10 minutes.
Historical Events	July 1st, 1979, August 4th, 1988 and August 8th, 1996
Climate Change Street Test	20% increase in the 100-year, 3-hour Chicago storm
Extracted from City of Ottawa Sewer Design Guidelines, October 2012, and ISSU,	

5.7 Hydraulic Grade Line Analysis

A detailed hydraulic grade line (HGL) modelling analysis will be completed for the proposed system at the detailed design level, based on the 100-year 3-hour Chicago, 12-hour SCS, and 24-hour SCS design storms, including historical design storms and climate change stress test as required. Detailed grading design and storm sewer design will be modified as required to achieve the freeboard requirements set out in Section 5.3 (per PIEDTB-2016-01).

5.8 Proposed Major System

Major system conveyance, or overland flow (OLF), will be provided to accommodate flows in excess of the minor system capacity. OLF is accommodated by generally storing stormwater up to the 100-year design event in road sags then routing additional surface flow along the road network and service easements towards the proposed drainage features to the Jock River, as shown in ***Drawing 1***. Stormwater discharges to the Borrisokane Road ROW which will require appropriate permits and approvals from the Ministry of Transportation.

5.9 Proposed Grading

The conceptual grading design described in Section 5.9, and shown in ***Drawing 4 (Appendix E),*** includes a saw-toothed-road design with 0.15% minimum grade from highpoint to highpoint in order to maximize available surface storage for management of flows up to the 100-year design event where possible.

The proposed site grading has been developed to optimize earthworks and provide major system conveyance to the end-of-line facility, which eventually outlets to the Borrisokane Road ROW and then to the Jock River or to the Future Greenbank Road ROW. Roadway connections to the Future Greenbank Road will be coordinated with

© DSEL

that future design based on the EA profile for that roadway (future grades shown in the FSR drawings are derived from the MMM Group's June 2014 information).

The geotechnical review of the site will provide additional information about the suitability of the site for the proposed services and grading scheme including any specific site remediation or earthworks programs. There is currently a dynamic compaction program developed for the property due to the extensive loose soils found on the property. At the time of detailed design, detailed review and signoff by a licensed Geotechnical Engineer will be required. Any grading onto adjacent properties will be coordinated with adjacent landowners for permissions and retaining walls will be implemented where required.

5.10 Stormwater Servicing Conclusions

The stormwater runoff is designed to be captured by an internal gravity sewer system that will convey flows to two outlets:

1. To an end-of-line dry SWM pond facility for quality and quantity control at the northwest corner of the property. An Enhanced Level of Protection will be provided for stormwater runoff from the subject property before being discharged to the Jock River. Quantity control is not required for the Jock River. Notwithstanding, some quantity control by on-site and SWM pond storage will be provided due to downstream infrastructure constraints.

2. To the Future Greenbank Road ROW where storm sewers will convey flow to existing storm sewers at Cambrian Road where they will be conveyed to the existing Clarke Pond for quality control treatment.

Infiltration targets noted in the ***MSS*** will be achieved via the installation of the ***EES*** system within local ROWs.

© DSEL

6.0 CONCLUSION AND RECOMMENDATIONS

This report provides details on the proposed on-site municipal services for the subject property and demonstrates that adequate municipal infrastructure capacity is expected to be available:

- The subject lands have been reviewed by the ***BSUEA MSS*** and has shown that water supply to the property can be provided. The water supply network will be expanded through neighboring properties to meet the water demands of the proposed concept plan via the trunk watermain network and local watermains identified. Detailed modelling will confirm the phasing of the extensions of trunk watermains and sizing of the local network to meet the required level of service. Any interim connection points to the system will be evaluated in the model.

- Sanitary service for the site will be provided for the subject property via a new sanitary trunk sewer to be constructed in the Future Greenbank Road ROW as part of the development of The Ridge (Brazeau) development. With the inclusion of the subject property, the existing downstream sewers have sufficient capacity to accommodate the subject property's proposed sanitary flows.

- Stormwater service is to be provided by capturing stormwater runoff via an internal gravity sewer system that will convey flows to a proposed end-of-line dry SWM pond facility for quality and quantity control and to the Clarke Pond. An Enhanced Level of Protection (80% TSS removal) will be provided for stormwater runoff from the subject property before being discharged to the Borrisokane Road ditch and ultimately to the Jock River. Quantity control is not required for the Jock River, however, some quantity control by on-site and SWM pond storage will be provided to minimize the sizing of offsite infrastructure and ensure that any downstream infrastructure constraints are accommodated.

- As suggested in the ***BSUEA MSS***, infiltration will be achieved via use of the preferred ***EES*** system approach. The ultimate extents of the system is contingent upon site conditions and the composition of fill material used within the site. Paterson has provided guidance with respect to anticipated infiltration rates (based on site investigations) that will be used for guidance in establishing the system extents.

© DSEL

- A detailed Hydraulic Grade Line (HGL) modelling analysis will be completed for the proposed system at the detailed design stage.

- Prior to detailed design of the infrastructure presented in this report, this report will require approval under the Planning Act as supporting information for the Plan of Subdivision application. Future project-specific approvals are also expected to be required for the infrastructure presented in this report from the City of Ottawa, MTO, MECP, and Rideau Valley Conservation Authority, among other agencies.

Prepared by,
David Schaeffer Engineering Ltd.



Per: Kevin L. Murphy, P.Eng.

© DSEL
2020-05-13_Drummond_FSR_1st_Subm.doc

APPENDIX A

GENERAL INFORMATION

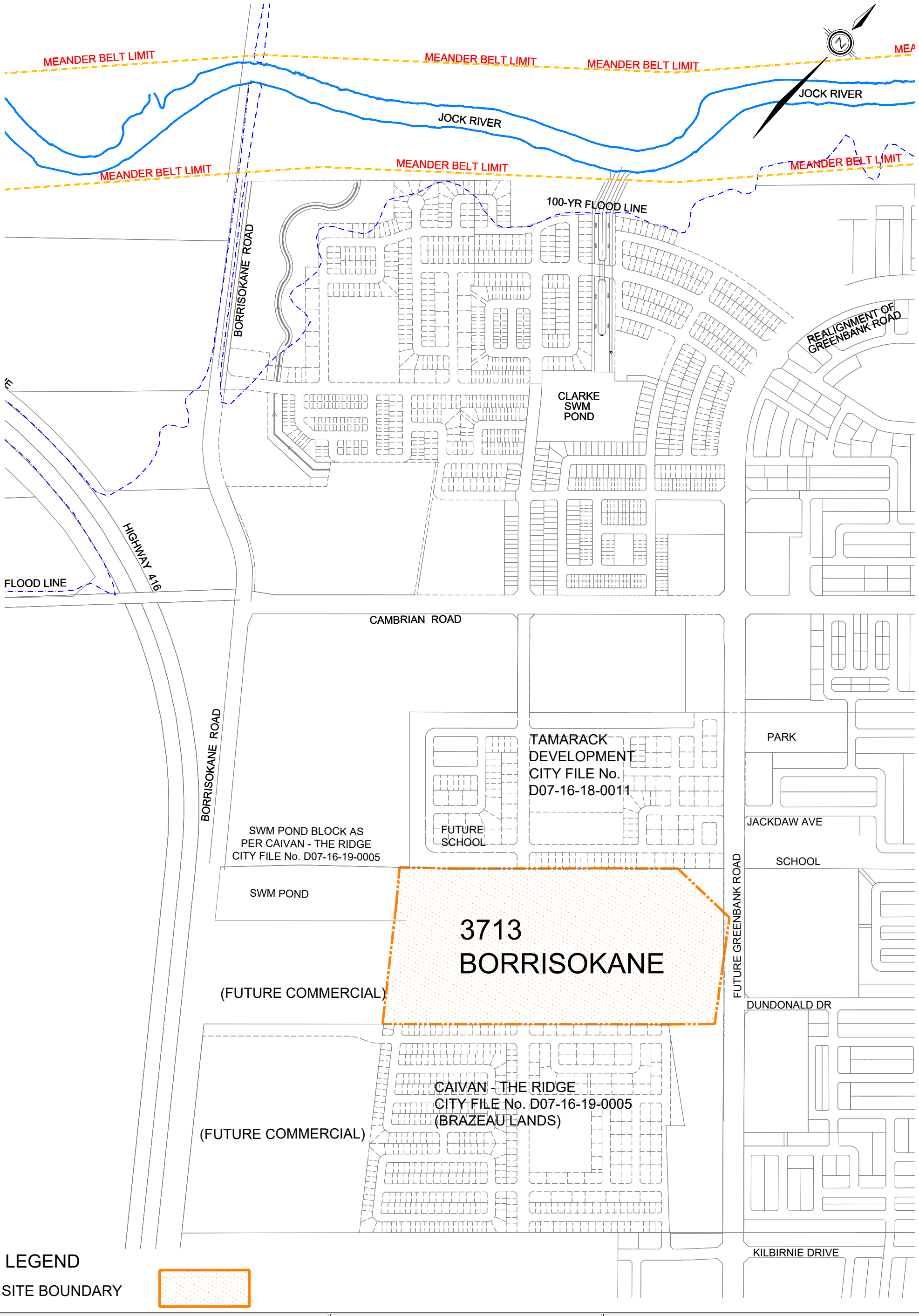

david schaeffer engineering ltd

120 Iber Road, Unit 103
Stittsville, Ontario, K2S 1E9
Tel. (613) 836-0856
Fax. (613) 836-7183
www.DSEL.ca

CAIVAN GREENBANK NORTH INC.

CITY OF OTTAWA

KEY PLAN

SCALE:	1:7000	PROJECT No.:	19-1123
DATE:	MAY 2020	FIGURE:	1

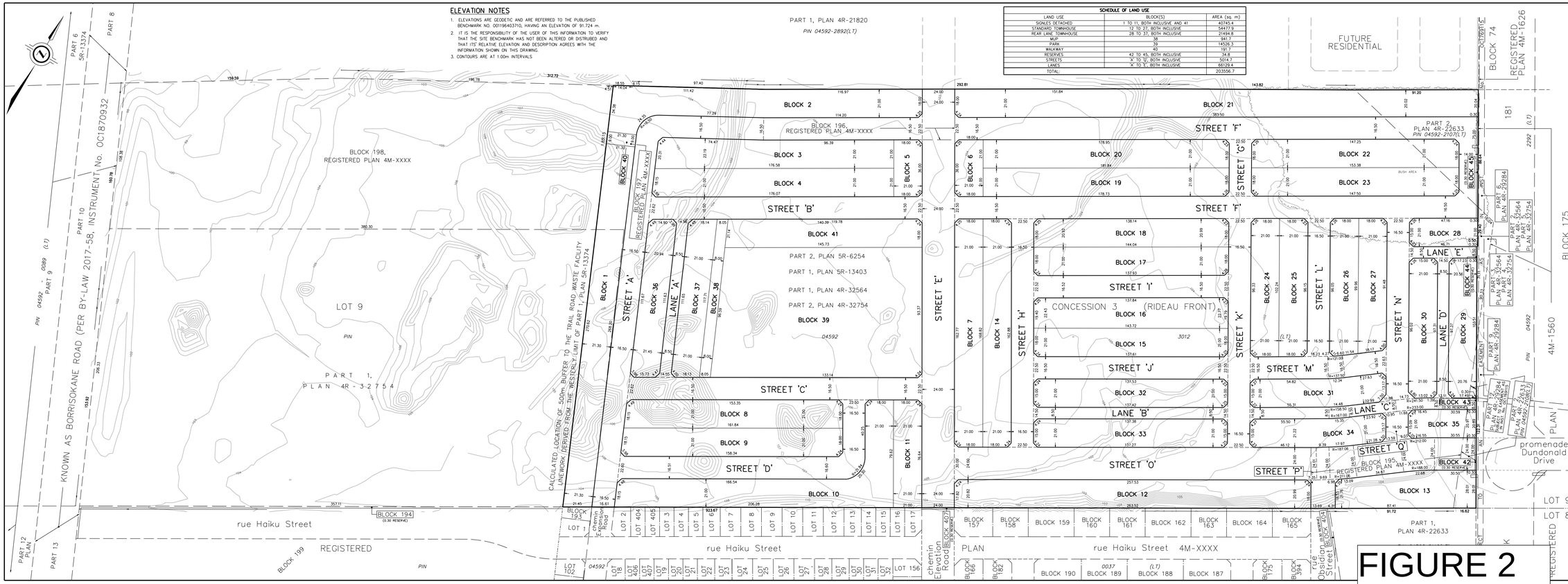

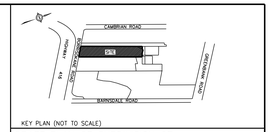

DRAFT PLAN OF SUBDIVISION OF
PART OF LOT 9 CONCESSION 3 (RIDEAU FRONT)
AND
ALL OF BLOCKS 195, 196 AND 197 REGISTERED PLAN 4M-XXXX
GEOGRAPHIC TOWNSHIP OF NEPEAN
NOW IN THE
CITY OF OTTAWA

SCALE 1 : 1000
20 0 20 40 60 metres

J.D. BARNES LIMITED
©COPYRIGHT 2020

METRIC DISTANCES AND/OR COORDINATES SHOWN ON THIS PLAN ARE IN METRES. METRES AND CAN BE CONVERTED TO FEET BY DIVIDING BY 0.3048.

NOTES
ALL DISTANCES ON CURVES ARE ARC DISTANCES UNLESS OTHERWISE SPECIFIED

ADDITIONAL INFORMATION
As required under section 51(17) of the Planning Act R.S.O. 2001

(a)(b)(e)(f)(g)(j) and (l) - As shown on this Plan.
(c) - As shown on this Draft and Key Plan
(d) - Land to be used in accordance with the Schedule of Land Use.
(h)(k) - Full Municipal Services
(i) - Offshore Marine Deposits of clay, silty clay and silt, Bedrock Ottawa Formation, limestone

SUBJECT TO THE CONDITIONS, IF ANY, SET FORTH IN OUR LETTER DATED ..... THIS DRAFT PLAN IS APPROVED BY THE CITY OF OTTAWA UNDER SECTION 51 OF THE PLANNING ACT THIS ..... DAY OF ....., 2020.

LILY XU, MCIP, RPP, MANAGER
DEVELOPMENT REVIEW SOUTH
PLANNING, INFRASTRUCTURE AND ECONOMIC DEVELOPMENT DEPARTMENT,
CITY OF OTTAWA

OWNER'S CERTIFICATE
CAIVAN GREENBANK NORTH INC., BEING THE REGISTERED OWNER OF THE SUBJECT LANDS HEREBY AUTHORIZES J. D. BARNES LIMITED TO PREPARE AND SUBMIT THIS DRAFT PLAN OF SUBDIVISION FOR APPROVAL.

DATE
FRANK CARO
PRESIDENT
(I HAVE THE AUTHORITY TO BIND THE CORPORATION)
CAIVAN GREENBANK NORTH INC.

SURVEYOR'S CERTIFICATE
I HEREBY CERTIFY THAT THE BOUNDARIES OF THE LAND TO BE SUBDIVIDED ARE CORRECTLY SHOWN.

PRELIMINARY
DATE
C.M. FOX
ONTARIO LAND SURVEYOR

J.D.BARNES LIMITED SURVEYING MAPPING GIS
LAND INFORMATION SPECIALISTS
2430 DON REID DRIVE, SUITE 204, OTTAWA, ON, K1H 1E1
T: (613) 731-7244 F: (613) 731-8955 www.jdbarnes.com

DRAWN BY: NS | CHECKED BY: XX | REFERENCE NO.:19-10-074-00 DRAFT
DATED: X/7/2020
FILE: G:\19-10-074\00\Drawing\Draft Plan\Ground\19-10-074-00_DP_Ground.dgn

Ministry of Natural Resources & Forestry
Kemptville District

10-1 Campus Drive
Kemptville ON K0G 1J0
Tel: 613 258-8204

Ministère des Richesses naturelles et des Forêts
District de Kemptville

10-1 Campus Drive
Kemptville ON K0G 1J0
Tél: 613 258-8204

Ontario

February 12, 2020

George W. Drummond Ltd.
30 Rideau Heights Drive
Nepean, ON K2E 7A6

Via Email: sdrummond@drummonds.com

Attn: Mr. Scott Drummond

Subject: **Surrender of Aggregate Resources Act Licence No. 4074**
'Drummond Costello Pit'
Pt. Lot 9, Concession 3RF
Former Geographic Township of Nepean, City of Ottawa

Dear Mr. Drummond,

Further to your request, a final inspection of this licensed property was completed on January 17, 2020. It was determined during this inspection that the final rehabilitation grades have been achieved for this property.

Further to our discussion, and in consideration of both a conditional sale agreement for the land and the development potential of the property, the requirement to topsoil and seed the site is hereby waived. You hereby accept any and all liability for the site in its current condition.

Due to the fact that the rehabilitation has been ongoing for several years, and that there has been no recent aggregate production, the surrender will be backdated to December 31, 2019 to align with the reporting requirements of The Ontario Aggregate Resources Corporation.

The licence is hereby surrendered, and you have no further obligations under the Aggregate Resources Act for this property. The file for this licence will be closed and archived. Please remove the ARA signage from the entrance to the site.

Thank you for your effort and cooperation in the rehabilitation of this site.

Sincerely,

Christopher M. Bierman

Christopher M. Bierman

Aggregate Resources Technical Specialist
Kemptville District – City of Ottawa & East Lanark Areas
T: 613-258-8264 I E: christopher.bierman@ontario.ca

cc. Sean Moore, Development Review Services - City of Ottawa
John DeRick - The Ontario Aggregate Resources Corporation

APPENDIX B

WATER SUPPLY

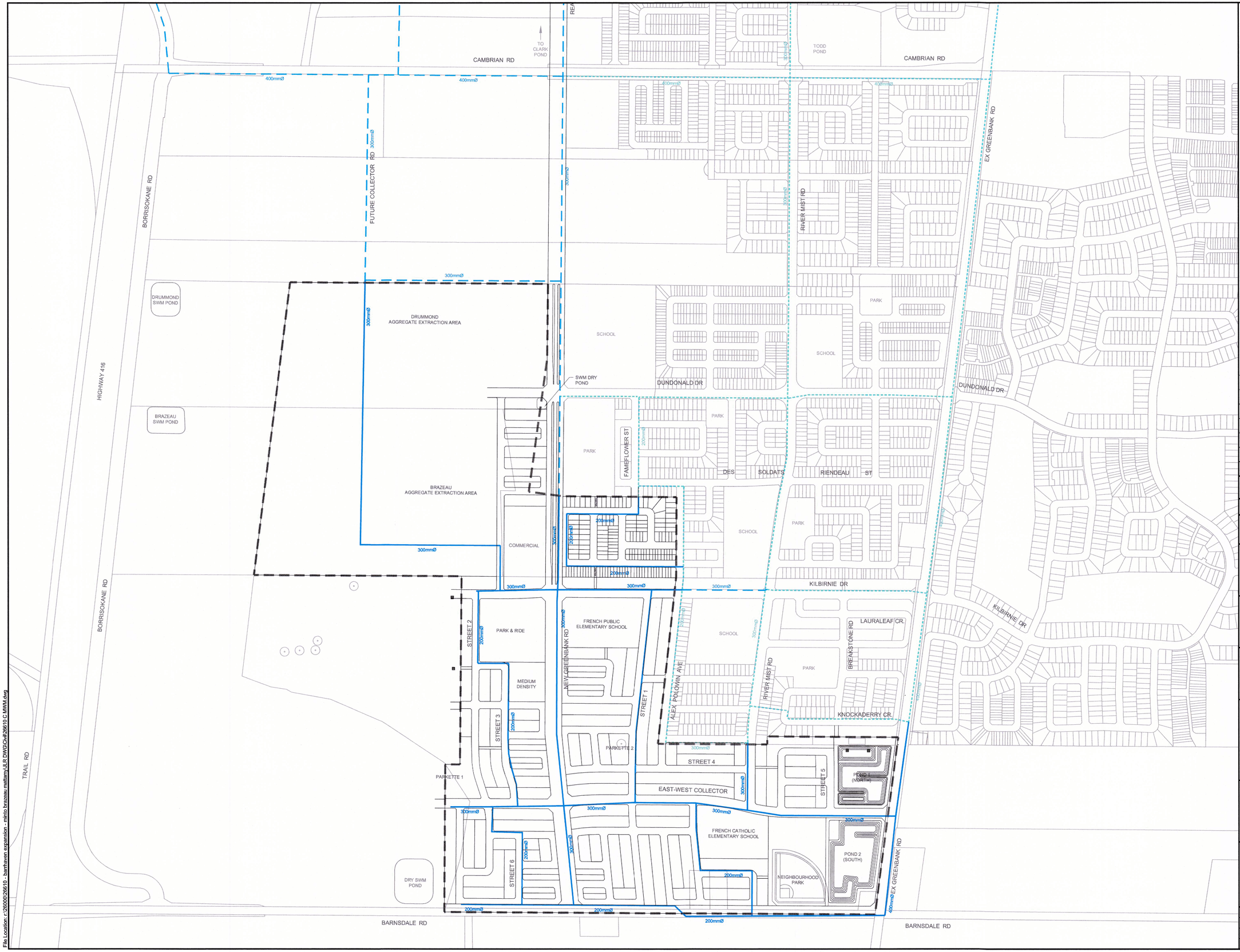

LEGEND

- PROPOSED WATERMAIN, PER 2018 BSUEA MSS
- FUTURE WATERMAIN PER 2014 BS MSS
- EXISTING WATERMAIN
- LIMIT OF STUDY AREA FOR BSUEA

No.	ISSUE / REVISION	DD/MM/YY
4	ISSUED FOR PLANNING COMMITTEE APPROVAL	04/05/18
3	ADDRESS COMMENTS, RE-ISSUE BSUEA MSS 2ND SUBMISSION	26/02/18
2	ISSUED AS PART OF DRAFT MSS	20/09/17
1	ISSUED FOR PRE-TAC WORKING MEETING	31/08/17

This drawing is copyright protected and may not be reproduced or used for purposes other than execution of the described work without the express written consent of J.L. Richards & Associates Limited.

VERIFY SHEET SIZE AND SCALES. BAR TO THE RIGHT IS 25mm IF THIS IS A FULL SIZE DRAWING. 0 25mm

SCALE: 1:4000

CLIENT:

CONSULTANT: www.jlrichards.ca

J.L.Richards ENGINEERS · ARCHITECTS · PLANNERS

CONSULTANT:

PROFESSIONAL STAMP

LICENCED PROFESSIONAL ENGINEER
M. N. L. DALRYMPLE
May 4/18
PROVINCE OF ONTARIO

PROJECT NORTH

PROJECT:

BARRHAVEN SOUTH URBAN EXPANSION AREA (BSUEA)

-

DRAWING:

MASTER WATERMAIN

DESIGN: JW	
DRAWN: CJM	DRAWING #: MWM
CHECKED: LD	
JLR #: 26610	

PLOT DATE: May 4, 2018 8:43:40 AM

File Location: r:\26000\26610 - barrhaven expansion - minto brazeau mattamy\JLR DWG\Civil\26610 C MWM.dwg

- Feedermains, which have been provided primarily for the purpose of redundancy, shall meet, at a minimum, the basic day plus fire flow demand.

In addition to the above targets, servicing should be carried out to minimize dead-ends.

7.2.2 Domestic Water Demand

The water demands presented in this section are based on the same unit and population estimates as per the wastewater servicing flows described in Section 6.2.1, which reflects the CDP unit count. The zone/system level criteria for water demands are based on land use type and are in Table 7-1 below. The water demand criteria are consistent with those used in Stantec's Revised Potable Water Servicing Analysis (October 19, 2016). Calculations are summarized below.

Basic Day (BSDY) demands are calculated from the system level water demands for residential, commercial and institutional land uses. Maximum Day (MXDY) demands are calculated by adding an Outdoor Water Demand (OWD) also shown in Table 7-1 below. Peak hour demands result from applying the 72-hour diurnal patterns developed by the City to each type of MXDY demand. The 72-hour diurnal patterns are unique to each type of land use to reflect the different use patterns. The maximum hourly demand observed within the 72-hour patterns is the Peak Hour (PKHR) demand.

The review of the Demonstration Plan (Figure 4-2) has revealed that the number of units and associated densities will result in an overall population that will exceed 3,000. As a result, the water supply analysis presented herein is to be conducted using system level water demands as developed by the City. These system level demands are summarized in Table 7-2.

Table 7-1: Theoretical Water Consumption Rate

Land Use Type	Consumption Rate	Units
Single Family Residential	180	L/cap/day
Multi-unit Residential (Townhouse / Back to Back)	198	
Apartment Residential	219	
Commercial	50,000	L/ha/day
Institutional	50,000	
Outside Water Demand	1,049	L/SFH/day

The above system level demands were applied to each of the blocks depicted on the Demonstration Plan. As previously noted, the Brazeau and Drummond aggregate properties have now been accounted as residential usage. It was assumed that residential densities for both properties would be consistent with those for the BSUEA. Based on this exercise, overall water demands of 18.66 L/s and 31.48 L/s were calculated for the basic day (BSDY) and maximum day

(MXDY), respectively. It should be noted that MXDY of 31.48 L/s includes an outside water usage of 10.15 L/s.

Table 7-2: Estimated Water Demands

Land Use	Area (ha)	Units	Pop.	ADD SFH[4]	ADD MLT[5]	ADD APT[6]	ADD COM[7]	ADD INS[8]	Total BSDY	OWD[9]	Total MXDY
Minto and Mattamy Lands											
Schools	4.55							2.63	2.63		2.63
Commercial	2.13						1.23		1.23		1.23
Medium-Low Density Residential	32.90	1080	3378	4.68	2.60				7.27	8.01	15.29
High Density Residential	0.90	120	216			0.55			0.55		0.55
Total	**40.48**	**1200**	**3594**	**4.68**	**2.60**	**0.55**	**1.23**	**2.63**	**11.69**	**8.01**	**19.71**
Brazeau Aggregate Extraction Area											
Schools	1.47							0.85	0.85		0.85
Commercial	0.67						0.39		0.39		0.39
Medium-Low Density Residential	10.30	360	1126	1.56	0.87				2.42	2.67	5.10
High Density Residential	0.28	38	68			0.17			0.17		0.17
Total	**12.72**	**398**	**1194**	**1.56**	**0.87**	**0.17**	**0.39**	**0.85**	**3.84**		**6.51**
Drummond Aggregate Extraction Area											
Schools	1.25							0.72	0.72		0.72
Commercial	0.57						0.33		0.33		0.33

[4] Daily Demand, Single Family Homes, L/s
[5] Average Daily Demand, Multi-Units (Townhouses and Back to Back Unit) L/s
[6] Average Daily Demand, Apartment Units, L/s
[7] Average Daily Demand, Commercial, L/s
[8] Average Daily Demand, Institutional, L/s

Medium-Low Density Residential	8.72	288	900	1.25	0.69				1.94	2.14	4.07
High Density Residential	0.24	32	58			0.15			0.15		0.15
Total	**10.78**	**320**	**958**	**1.25**	**0.69**	**0.15**	**0.33**	**0.72**	**3.14**	**2.14**	**5.28**
Barrhaven South Urban Expansion Area Totals											
Total	**63.98**	**1918**	**5746**	**7.48**	**4.16**	**0.87**	**1.95**	**4.21**	**18.66**	**10.15**	**31.48**

7.2.3 Watermain Sizing and Roughness

The overall watermain layout for the BSUEA is shown on Drawing MWM. Watermain roughness coefficients were determined using the friction factors presented in Section 4.2.12 of the Design Guidelines and summarized in Table 7-3 below. The internal pipe diameters were modelled based on Section 4.3.5 of the Design Guidelines, as summarized in Table 7-4 below.

Table 7-3: Watermain Roughness Coefficients

Watermain Diameter	C-Factor
150 mm	100
200 to 250 mm	110
300 to 600 mm	120
Over 600 mm	130

Table 7-4: PVC Watermain Internal Diameters

Nominal Diameter	Inside Diameter
150 mm	155 mm
200 mm	204 mm
300 mm	297 mm
400 mm	393 mm

7.2.4 Fire Flow

The City standard in regard to fire protection is the Fire Underwriters Survey and Technical Bulletin ISDTB-2014-02. To evaluate the proposed water distribution system, a fire flow of 13,000 L/min (217 L/s) was used in this system level analysis in accordance with the recommendations of the 2013 Water Master Plan.

FUTURE SCHOOL

FUTURE DELPHINUS AVE

TAMARACK - THE MEADOWS
IN HALF MOON BAY
CITY FILE No. D07-16-18-0011

JACKDAW AVE

SCHOOL

FUTURE GREENBANK ROAD

SWM POND BLOCK AS PER CAIVAN - THE RIDGE CITY FILE No. D07-16-19-0005

FUT. 305Ø WM

PROP 300Ø WM (CITY FILE No. D07-16-19-0005)

CAIVAN - ABIC GRADING PLAN PREPARED BY DSEL, DECEMBER 2019.

PARK

URBAN BOUNDARY

PROP 300Ø WM (CITY FILE No. D07-16-19-0005)

DUNDONALD DR

305Ø WM

PROP. 300Ø WM

FUT. 305Ø WM

HAIKU STREET

HAIKU STREET

EXPANSION ROAD

PROP 305Ø WM (CITY FILE No. D07-16-19-0005)

PROP. 200Ø WM

ELEVATION ROAD

PROP 300Ø WM

OBSIDIAN STREET

CAIVAN - THE RIDGE
CITY FILE No. D07-16-19-0005

LEGEND

- SUBJECT LANDS
- PROPOSED LOCAL WATERMAIN
- EXISTING WATERMAIN
- PROPOSED WATERMAIN BY OTHERS
- FUTURE WATERMAIN BY OTHERS
- URBAN BOUNDARY
- PLUG

DSEL
david schaeffer engineering ltd
120 Iber Road, Unit 103
Stittsville, Ontario, K2S 1E9
Tel. (613) 836-0856
Fax. (613) 836-7183
www.DSEL.ca

CAIVAN GREENBANK NORTH INC.

CITY OF OTTAWA

WATERMAIN SERVICING PLAN

SCALE:	1:1000	PROJECT No.:	19-1123
DATE:	MAY 2020	DRAWING:	4

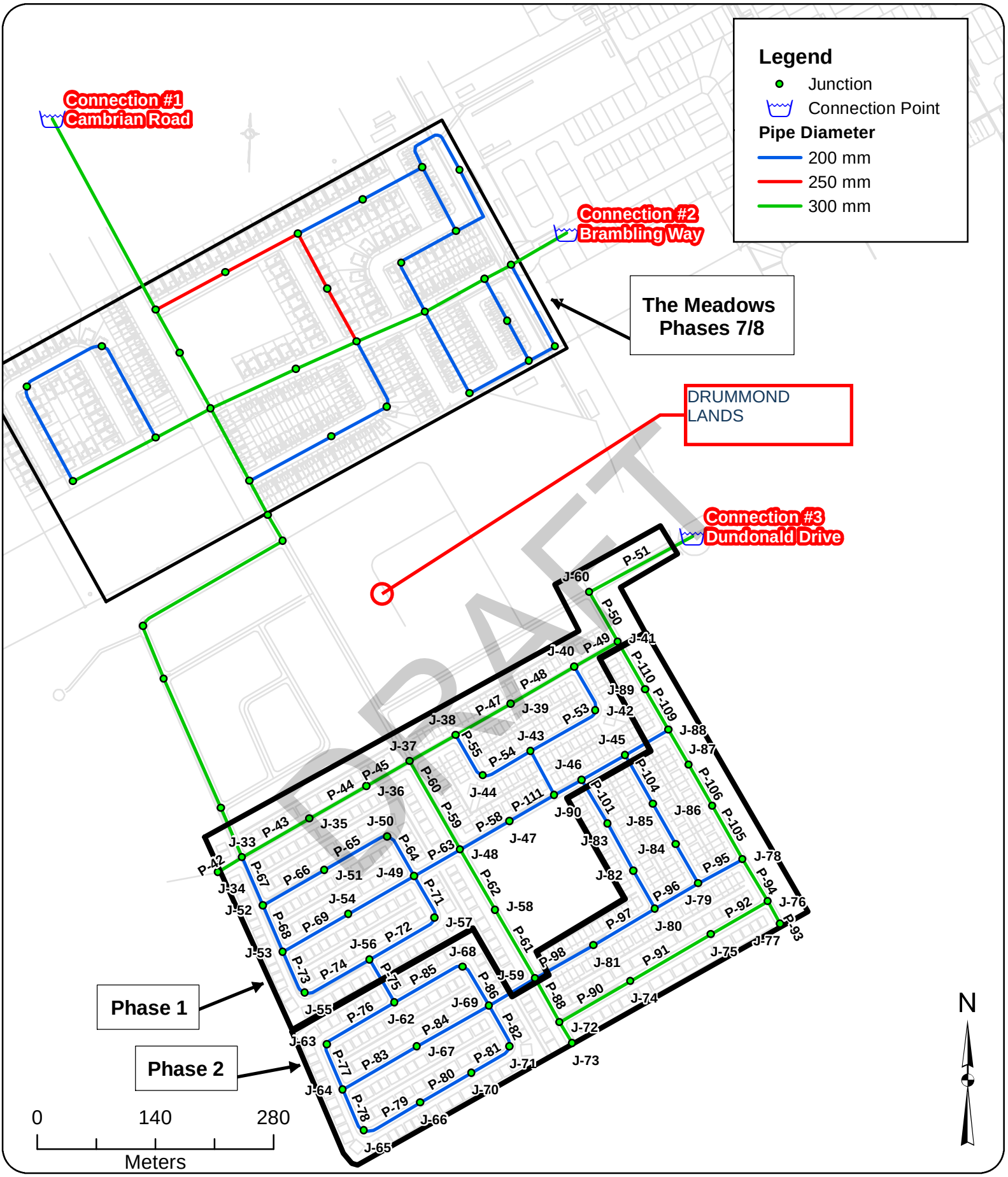

Project:	**Hydraulic Capacity and Modeling Analysis of the Brazeau Lands**
Client:	**David Schaeffer Engineering Ltd.**
Date:	**November 2019**
Created by:	**BL**
Reviewed by:	**WdS**

GeoAdvice Engineering Inc.

DISCLAIMER: GeoAdvice does not warrant in any way the accuracy and completeness of the information shown on this map. Field verification of the accuracy and completeness of the information shown on this map is the sole responsibility of the user.

Brazeau Lands Site Layout and Connection Points

Figure 1.1

APPENDIX C

SANITARY

TAMARACK MEADOWS DEVELOPMENT AREA

MSS ROUTING FOR DRUMMOND LANDS DEVELOPMENT AREA

Originally intended to go through Tamarack Meadows but directed to Future Greenbank Road in order to mitigate sewer depths and alleviate City concerns with impacts to groundwater plume from the landfill property on the west side of the Hwy 416 right-of-way.

PROPOSED ROUTING FOR DRUMMOND LANDS DEVELOPMENT AREA

(connections to the sanitary outlet being proposed for The Ridge (Brazeau Lands) development area along the Future Greenbank Road alignment.

CAMBRIAN RD
BORRISOKANE RD
FUTURE COLLECTOR RD
EX GREENBANK RD
HIGHWAY 416
TRAIL RD
BARNSDALE RD
DUNDONALD DR
KILBIRNIE DR
KILBIRNIE CR.
LAURALEAF CR.
KNOCKADERRY CR.
BREAKSTONE RD
RIVER MIST RD
ALEXANDRIA AVE
FAMEFLOWER ST
DES SOLDATS RIENDEAU ST
NEW GREENBANK RD
STREET 1
STREET 2
STREET 3
STREET 4
STREET 5
STREET 6
TODD POND
DRUMMOND SWM POND
BRAZEAU SWM POND
DRY SWM POND
DRUMMOND AGGREGATE EXTRACTION AREA
BRAZEAU AGGREGATE EXTRACTION AREA
SCHOOL
PARK
COMMERCIAL
MEDIUM DENSITY
PARK & RIDE
FRENCH PUBLIC ELEMENTARY SCHOOL
FRENCH CATHOLIC ELEMENTARY SCHOOL
NEIGHBOURHOOD PARK
PARKETTE 1
PARKETTE 2
SWM DRY POND
POND 1 (NORTH)
POND 2 (SOUTH)
EAST-WEST COLLECTOR
MA10
MA11
MA13
MA14
EX MH57A
EX MH57B
EX MH57C
EX MH57D
EX MH21A
EX MH40
EX MH58A
EX MH58B
EX MH58C
EX MH58D
EX MH58E
EX MH58F
EX MH58G
EX MH58H
EX MH59A
EX MH59B
EX MH59C
EX MH59D
EX MH59E
EX MH59F
EX MH59G
EX MH59H
EX MH59I
EX MH59J
EX MH59K
EX MH59L
EX MH59M
EX MH59N
EX MH59O
EX MH59P
EX MH59Q
EX MH59R
EX MH59S
EX MH59T
EX MH59U
EX MH59V
EX MH59W
EX MH59X
EX MH59Y
EX MH59Z
EX MH60A
EX MH60B
EX MH60C
EX MH60D
EX MH60E
EX MH60F
EX MH60G
EX MH60H
EX MH60I
EX MH60J
EX MH60K
EX MH60L
EX MH60M
EX MH60N
EX MH60O
EX MH60P
EX MH60Q
EX MH60R
EX MH60S
EX MH60T
EX MH60U
EX MH60V
EX MH60W
EX MH60X
EX MH60Y
EX MH60Z
EX MH61A
EX MH61B
EX MH61C
EX MH61D
EX MH61E
EX MH61F
EX MH61G
EX MH61H
EX MH61I
EX MH61J
EX MH61K
EX MH61L
EX MH61M
EX MH61N
EX MH61O
EX MH61P
EX MH61Q
EX MH61R
EX MH61S
EX MH61T
EX MH61U
EX MH61V
EX MH61W
EX MH61X
EX MH61Y
EX MH61Z
EX MH62A
EX MH62B
EX MH62C
EX MH62D
EX MH62E
EX MH62F
EX MH62G
EX MH62H
EX MH62I
EX MH62J
EX MH62K
EX MH62L
EX MH62M
EX MH62N
EX MH62O
EX MH62P
EX MH62Q
EX MH62R
EX MH62S
EX MH62T
EX MH62U
EX MH62V
EX MH62W
EX MH62X
EX MH62Y
EX MH62Z
EX MH63A
EX MH63B
EX MH63C
EX MH63D
EX MH63E
EX MH63F
EX MH63G
EX MH63H
EX MH63I
EX MH63J
EX MH63K
EX MH63L
EX MH63M
EX MH63N
EX MH63O
EX MH63P
EX MH63Q
EX MH63R
EX MH63S
EX MH63T
EX MH63U
EX MH63V
EX MH63W
EX MH63X
EX MH63Y
EX MH63Z
EX MH64A
EX MH64B
EX MH64C
EX MH64D
EX MH64E
EX MH64F
EX MH64G
EX MH64H
EX MH64I
EX MH64J
EX MH64K
EX MH64L
EX MH64M
EX MH64N
EX MH64O
EX MH64P
EX MH64Q
EX MH64R
EX MH64S
EX MH64T
EX MH64U
EX MH64V
EX MH64W
EX MH64X
EX MH64Y
EX MH64Z
EX MH65A
EX MH65B
EX MH65C
EX MH65D
EX MH65E
EX MH65F
EX MH65G
EX MH65H
EX MH65I
EX MH65J
EX MH65K
EX MH65L
EX MH65M
EX MH65N
EX MH65O
EX MH65P
EX MH65Q
EX MH65R
EX MH65S
EX MH65T
EX MH65U
EX MH65V
EX MH65W
EX MH65X
EX MH65Y
EX MH65Z
EX MH66A
EX MH66B
EX MH66C
EX MH66D
EX MH66E
EX MH66F
EX MH66G
EX MH66H
EX MH66I
EX MH66J
EX MH66K
EX MH66L
EX MH66M
EX MH66N
EX MH66O
EX MH66P
EX MH66Q
EX MH66R
EX MH66S
EX MH66T
EX MH66U
EX MH66V
EX MH66W
EX MH66X
EX MH66Y
EX MH66Z
EX MH67A
EX MH67B
EX MH67C
EX MH67D
EX MH67E
EX MH67F
EX MH67G
EX MH67H
EX MH67I
EX MH67J
EX MH67K
EX MH67L
EX MH67M
EX MH67N
EX MH67O
EX MH67P
EX MH67Q
EX MH67R
EX MH67S
EX MH67T
EX MH67U
EX MH67V
EX MH67W
EX MH67X
EX MH67Y
EX MH67Z
EX MH68A
EX MH68B
EX MH68C
EX MH68D
EX MH68E
EX MH68F
EX MH68G
EX MH68H
EX MH68I
EX MH68J
EX MH68K
EX MH68L
EX MH68M
EX MH68N
EX MH68O
EX MH68P
EX MH68Q
EX MH68R
EX MH68S
EX MH68T
EX MH68U
EX MH68V
EX MH68W
EX MH68X
EX MH68Y
EX MH68Z
EX MH69A
EX MH69B
EX MH69C
EX MH69D
EX MH69E
EX MH69F
EX MH69G
EX MH69H
EX MH69I
EX MH69J
EX MH69K
EX MH69L
EX MH69M
EX MH69N
EX MH69O
EX MH69P
EX MH69Q
EX MH69R
EX MH69S
EX MH69T
EX MH69U
EX MH69V
EX MH69W
EX MH69X
EX MH69Y
EX MH69Z
EX MH70A
EX MH70B
EX MH70C
EX MH70D
EX MH70E
EX MH70F
EX MH70G
EX MH70H
EX MH70I
EX MH70J
EX MH70K
EX MH70L
EX MH70M
EX MH70N
EX MH70O
EX MH70P
EX MH70Q
EX MH70R
EX MH70S
EX MH70T
EX MH70U
EX MH70V
EX MH70W
EX MH70X
EX MH70Y
EX MH70Z
EX MH71A
EX MH71B
EX MH71C
EX MH71D
EX MH71E
EX MH71F
EX MH71G
EX MH71H
EX MH71I
EX MH71J
EX MH71K
EX MH71L
EX MH71M
EX MH71N
EX MH71O
EX MH71P
EX MH71Q
EX MH71R
EX MH71S
EX MH71T
EX MH71U
EX MH71V
EX MH71W
EX MH71X
EX MH71Y
EX MH71Z
EX MH72A
EX MH72B
EX MH72C
EX MH72D
EX MH72E
EX MH72F
EX MH72G
EX MH72H
EX MH72I
EX MH72J
EX MH72K
EX MH72L
EX MH72M
EX MH72N
EX MH72O
EX MH72P
EX MH72Q
EX MH72R
EX MH72S
EX MH72T
EX MH72U
EX MH72V
EX MH72W
EX MH72X
EX MH72Y
EX MH72Z
EX MH73A
EX MH73B
EX MH73C
EX MH73D
EX MH73E
EX MH73F
EX MH73G
EX MH73H
EX MH73I
EX MH73J
EX MH73K
EX MH73L
EX MH73M
EX MH73N
EX MH73O
EX MH73P
EX MH73Q
EX MH73R
EX MH73S
EX MH73T
EX MH73U
EX MH73V
EX MH73W
EX MH73X
EX MH73Y
EX MH73Z
EX MH74A
EX MH74B
EX MH74C
EX MH74D
EX MH74E
EX MH74F
EX MH74G
EX MH74H
EX MH74I
EX MH74J
EX MH74K
EX MH74L
EX MH74M
EX MH74N
EX MH74O
EX MH74P
EX MH74Q
EX MH74R
EX MH74S
EX MH74T
EX MH74U
EX MH74V
EX MH74W
EX MH74X
EX MH74Y
EX MH74Z
EX MH75A
EX MH75B
EX MH75C
EX MH75D
EX MH75E
EX MH75F
EX MH75G
EX MH75H
EX MH75I
EX MH75J
EX MH75K
EX MH75L
EX MH75M
EX MH75N
EX MH75O
EX MH75P
EX MH75Q
EX MH75R
EX MH75S
EX MH75T
EX MH75U
EX MH75V
EX MH75W
EX MH75X
EX MH75Y
EX MH75Z
EX MH76A
EX MH76B
EX MH76C
EX MH76D
EX MH76E
EX MH76F
EX MH76G
EX MH76H
EX MH76I
EX MH76J
EX MH76K
EX MH76L
EX MH76M
EX MH76N
EX MH76O
EX MH76P
EX MH76Q
EX MH76R
EX MH76S
EX MH76T
EX MH76U
EX MH76V
EX MH76W
EX MH76X
EX MH76Y
EX MH76Z
EX MH77A
EX MH77B
EX MH77C
EX MH77D
EX MH77E
EX MH77F
EX MH77G
EX MH77H
EX MH77I
EX MH77J
EX MH77K
EX MH77L
EX MH77M
EX MH77N
EX MH77O
EX MH77P
EX MH77Q
EX MH77R
EX MH77S
EX MH77T
EX MH77U
EX MH77V
EX MH77W
EX MH77X
EX MH77Y
EX MH77Z
EX MH78A
EX MH78B
EX MH78C
EX MH78D
EX MH78E
EX MH78F
EX MH78G
EX MH78H
EX MH78I
EX MH78J
EX MH78K
EX MH78L
EX MH78M
EX MH78N
EX MH78O
EX MH78P
EX MH78Q
EX MH78R
EX MH78S
EX MH78T
EX MH78U
EX MH78V
EX MH78W
EX MH78X
EX MH78Y
EX MH78Z
EX MH79A
EX MH79B
EX MH79C
EX MH79D
EX MH79E
EX MH79F
EX MH79G
EX MH79H
EX MH79I
EX MH79J
EX MH79K
EX MH79L
EX MH79M
EX MH79N
EX MH79O
EX MH79P
EX MH79Q
EX MH79R
EX MH79S
EX MH79T
EX MH79U
EX MH79V
EX MH79W
EX MH79X
EX MH79Y
EX MH79Z
EX MH80A
EX MH80B
EX MH80C
EX MH80D
EX MH80E
EX MH80F
EX MH80G
EX MH80H
EX MH80I
EX MH80J
EX MH80K
EX MH80L
EX MH80M
EX MH80N
EX MH80O
EX MH80P
EX MH80Q
EX MH80R
EX MH80S
EX MH80T
EX MH80U
EX MH80V
EX MH80W
EX MH80X
EX MH80Y
EX MH80Z
EX MH81A
EX MH81B
EX MH81C
EX MH81D
EX MH81E
EX MH81F
EX MH81G
EX MH81H
EX MH81I
EX MH81J
EX MH81K
EX MH81L
EX MH81M
EX MH81N
EX MH81O
EX MH81P
EX MH81Q
EX MH81R
EX MH81S
EX MH81T
EX MH81U
EX MH81V
EX MH81W
EX MH81X
EX MH81Y
EX MH81Z
EX MH82A
EX MH82B
EX MH82C
EX MH82D
EX MH82E
EX MH82F
EX MH82G
EX MH82H
EX MH82I
EX MH82J
EX MH82K
EX MH82L
EX MH82M
EX MH82N
EX MH82O
EX MH82P
EX MH82Q
EX MH82R
EX MH82S
EX MH82T
EX MH82U
EX MH82V
EX MH82W
EX MH82X
EX MH82Y
EX MH82Z
EX MH83A
EX MH83B
EX MH83C
EX MH83D
EX MH83E
EX MH83F
EX MH83G
EX MH83H
EX MH83I
EX MH83J
EX MH83K
EX MH83L
EX MH83M
EX MH83N
EX MH83O
EX MH83P
EX MH83Q
EX MH83R
EX MH83S
EX MH83T
EX MH83U
EX MH83V
EX MH83W
EX MH83X
EX MH83Y
EX MH83Z
EX MH84A
EX MH84B
EX MH84C
EX MH84D
EX MH84E
EX MH84F
EX MH84G
EX MH84H
EX MH84I
EX MH84J
EX MH84K
EX MH84L
EX MH84M
EX MH84N
EX MH84O
EX MH84P
EX MH84Q
EX MH84R
EX MH84S
EX MH84T
EX MH84U
EX MH84V
EX MH84W
EX MH84X
EX MH84Y
EX MH84Z
EX MH85A
EX MH85B
EX MH85C
EX MH85D
EX MH85E
EX MH85F
EX MH85G
EX MH85H
EX MH85I
EX MH85J
EX MH85K
EX MH85L
EX MH85M
EX MH85N
EX MH85O
EX MH85P
EX MH85Q
EX MH85R
EX MH85S
EX MH85T
EX MH85U
EX MH85V
EX MH85W
EX MH85X
EX MH85Y
EX MH85Z
EX MH86A
EX MH86B
EX MH86C
EX MH86D
EX MH86E
EX MH86F
EX MH86G
EX MH86H
EX MH86I
EX MH86J
EX MH86K
EX MH86L
EX MH86M
EX MH86N
EX MH86O
EX MH86P
EX MH86Q
EX MH86R
EX MH86S
EX MH86T
EX MH86U
EX MH86V
EX MH86W
EX MH86X
EX MH86Y
EX MH86Z
EX MH87A
EX MH87B
EX MH87C
EX MH87D
EX MH87E
EX MH87F
EX MH87G
EX MH87H
EX MH87I
EX MH87J
EX MH87K
EX MH87L
EX MH87M
EX MH87N
EX MH87O
EX MH87P
EX MH87Q
EX MH87R
EX MH87S
EX MH87T
EX MH87U
EX MH87V
EX MH87W
EX MH87X
EX MH87Y
EX MH87Z
EX MH88A
EX MH88B
EX MH88C
EX MH88D
EX MH88E
EX MH88F
EX MH88G
EX MH88H
EX MH88I
EX MH88J
EX MH88K
EX MH88L
EX MH88M
EX MH88N
EX MH88O
EX MH88P
EX MH88Q
EX MH88R
EX MH88S
EX MH88T
EX MH88U
EX MH88V
EX MH88W
EX MH88X
EX MH88Y
EX MH88Z
EX MH89A
EX MH89B
EX MH89C
EX MH89D
EX MH89E
EX MH89F
EX MH89G
EX MH89H
EX MH89I
EX MH89J
EX MH89K
EX MH89L
EX MH89M
EX MH89N
EX MH89O
EX MH89P
EX MH89Q
EX MH89R
EX MH89S
EX MH89T
EX MH89U
EX MH89V
EX MH89W
EX MH89X
EX MH89Y
EX MH89Z
EX MH90A
EX MH90B
EX MH90C
EX MH90D
EX MH90E
EX MH90F
EX MH90G
EX MH90H
EX MH90I
EX MH90J
EX MH90K
EX MH90L
EX MH90M
EX MH90N
EX MH90O
EX MH90P
EX MH90Q
EX MH90R
EX MH90S
EX MH90T
EX MH90U
EX MH90V
EX MH90W
EX MH90X
EX MH90Y
EX MH90Z
EX MH91A
EX MH91B
EX MH91C
EX MH91D
EX MH91E
EX MH91F
EX MH91G
EX MH91H
EX MH91I
EX MH91J
EX MH91K
EX MH91L
EX MH91M
EX MH91N
EX MH91O
EX MH91P
EX MH91Q
EX MH91R
EX MH91S
EX MH91T
EX MH91U
EX MH91V
EX MH91W
EX MH91X
EX MH91Y
EX MH91Z
EX MH92A
EX MH92B
EX MH92C
EX MH92D
EX MH92E
EX MH92F
EX MH92G
EX MH92H
EX MH92I
EX MH92J
EX MH92K
EX MH92L
EX MH92M
EX MH92N
EX MH92O
EX MH92P
EX MH92Q
EX MH92R
EX MH92S
EX MH92T
EX MH92U
EX MH92V
EX MH92W
EX MH92X
EX MH92Y
EX MH92Z
EX MH93A
EX MH93B
EX MH93C
EX MH93D
EX MH93E
EX MH93F
EX MH93G
EX MH93H
EX MH93I
EX MH93J
EX MH93K
EX MH93L
EX MH93M
EX MH93N
EX MH93O
EX MH93P
EX MH93Q
EX MH93R
EX MH93S
EX MH93T
EX MH93U
EX MH93V
EX MH93W
EX MH93X
EX MH93Y
EX MH93Z
EX MH94A
EX MH94B
EX MH94C
EX MH94D
EX MH94E
EX MH94F
EX MH94G
EX MH94H
EX MH94I
EX MH94J
EX MH94K
EX MH94L
EX MH94M
EX MH94N
EX MH94O
EX MH94P
EX MH94Q
EX MH94R
EX MH94S
EX MH94T
EX MH94U
EX MH94V
EX MH94W
EX MH94X
EX MH94Y
EX MH94Z
EX MH95A
EX MH95B
EX MH95C
EX MH95D
EX MH95E
EX MH95F
EX MH95G
EX MH95H
EX MH95I
EX MH95J
EX MH95K
EX MH95L
EX MH95M
EX MH95N
EX MH95O
EX MH95P
EX MH95Q
EX MH95R
EX MH95S
EX MH95T
EX MH95U
EX MH95V
EX MH95W
EX MH95X
EX MH95Y
EX MH95Z
EX MH96A
EX MH96B
EX MH96C
EX MH96D
EX MH96E
EX MH96F
EX MH96G
EX MH96H
EX MH96I
EX MH96J
EX MH96K
EX MH96L
EX MH96M
EX MH96N
EX MH96O
EX MH96P
EX MH96Q
EX MH96R
EX MH96S
EX MH96T
EX MH96U
EX MH96V
EX MH96W
EX MH96X
EX MH96Y
EX MH96Z
EX MH97A
EX MH97B
EX MH97C
EX MH97D
EX MH97E
EX MH97F
EX MH97G
EX MH97H
EX MH97I
EX MH97J
EX MH97K
EX MH97L
EX MH97M
EX MH97N
EX MH97O
EX MH97P
EX MH97Q
EX MH97R
EX MH97S
EX MH97T
EX MH97U
EX MH97V
EX MH97W
EX MH97X
EX MH97Y
EX MH97Z
EX MH98A
EX MH98B
EX MH98C
EX MH98D
EX MH98E
EX MH98F
EX MH98G
EX MH98H
EX MH98I
EX MH98J
EX MH98K
EX MH98L
EX MH98M
EX MH98N
EX MH98O
EX MH98P
EX MH98Q
EX MH98R
EX MH98S
EX MH98T
EX MH98U
EX MH98V
EX MH98W
EX MH98X
EX MH98Y
EX MH98Z
EX MH99A
EX MH99B
EX MH99C
EX MH99D
EX MH99E
EX MH99F
EX MH99G
EX MH99H
EX MH99I
EX MH99J
EX MH99K
EX MH99L
EX MH99M
EX MH99N
EX MH99O
EX MH99P
EX MH99Q
EX MH99R
EX MH99S
EX MH99T
EX MH99U
EX MH99V
EX MH99W
EX MH99X
EX MH99Y
EX MH99Z
EX MH100A
EX MH100B
EX MH100C
EX MH100D
EX MH100E
EX MH100F
EX MH100G
EX MH100H
EX MH100I
EX MH100J
EX MH100K
EX MH100L
EX MH100M
EX MH100N
EX MH100O
EX MH100P
EX MH100Q
EX MH100R
EX MH100S
EX MH100T
EX MH100U
EX MH100V
EX MH100W
EX MH100X
EX MH100Y
EX MH100Z
EX MH101A
EX MH101B
EX MH101C
EX MH101D
EX MH101E
EX MH101F
EX MH101G
EX MH101H
EX MH101I
EX MH101J
EX MH101K
EX MH101L
EX MH101M
EX MH101N
EX MH101O
EX MH101P
EX MH101Q
EX MH101R
EX MH101S
EX MH101T
EX MH101U
EX MH101V
EX MH101W
EX MH101X
EX MH101Y
EX MH101Z
EX MH102A
EX MH102B
EX MH102C
EX MH102D
EX MH102E
EX MH102F
EX MH102G
EX MH102H
EX MH102I
EX MH102J
EX MH102K
EX MH102L
EX MH102M
EX MH102N
EX MH102O
EX MH102P
EX MH102Q
EX MH102R
EX MH102S
EX MH102T
EX MH102U
EX MH102V
EX MH102W
EX MH102X
EX MH102Y
EX MH102Z
EX MH103A
EX MH103B
EX MH103C
EX MH103D
EX MH103E
EX MH103F
EX MH103G
EX MH103H
EX MH103I
EX MH103J
EX MH103K
EX MH103L
EX MH103M
EX MH103N
EX MH103O
EX MH103P
EX MH103Q
EX MH103R
EX MH103S
EX MH103T
EX MH103U
EX MH103V
EX MH103W
EX MH103X
EX MH103Y
EX MH103Z
EX MH104A
EX MH104B
EX MH104C
EX MH104D
EX MH104E
EX MH104F
EX MH104G
EX MH104H
EX MH104I
EX MH104J
EX MH104K
EX MH104L
EX MH104M
EX MH104N
EX MH104O
EX MH104P
EX MH104Q
EX MH104R
EX MH104S
EX MH104T
EX MH104U
EX MH104V
EX MH104W
EX MH104X
EX MH104Y
EX MH104Z
EX MH105A
EX MH105B
EX MH105C
EX MH105D
EX MH105E
EX MH105F
EX MH105G
EX MH105H
EX MH105I
EX MH105J
EX MH105K
EX MH105L
EX MH105M
EX MH105N
EX MH105O
EX MH105P
EX MH105Q
EX MH105R
EX MH105S
EX MH105T
EX MH105U
EX MH105V
EX MH105W
EX MH105X
EX MH105Y
EX MH105Z
EX MH106A
EX MH106B
EX MH106C
EX MH106D
EX MH106E
EX MH106F
EX MH106G
EX MH106H
EX MH106I
EX MH106J
EX MH106K
EX MH106L
EX MH106M
EX MH106N
EX MH106O
EX MH106P
EX MH106Q
EX MH106R
EX MH106S
EX MH106T
EX MH106U
EX MH106V
EX MH106W
EX MH106X
EX MH106Y
EX MH106Z
EX MH107A
EX MH107B
EX MH107C
EX MH107D
EX MH107E
EX MH107F
EX MH107G
EX MH107H
EX MH107I
EX MH107J
EX MH107K
EX MH107L
EX MH107M
EX MH107N
EX MH107O
EX MH107P
EX MH107Q
EX MH107R
EX MH107S
EX MH107T
EX MH107U
EX MH107V
EX MH107W
EX MH107X
EX MH107Y
EX MH107Z
EX MH108A
EX MH108B
EX MH108C
EX MH108D
EX MH108E
EX MH108F
EX MH108G
EX MH108H
EX MH108I
EX MH108J
EX MH108K
EX MH108L
EX MH108M
EX MH108N
EX MH108O
EX MH108P
EX MH108Q
EX MH108R
EX MH108S
EX MH108T
EX MH108U
EX MH108V
EX MH108W
EX MH108X
EX MH108Y
EX MH108Z
EX MH109A
EX MH109B
EX MH109C
EX MH109D
EX MH109E
EX MH109F
EX MH109G
EX MH109H
EX MH109I
EX MH109J
EX MH109K
EX MH109L
EX MH109M
EX MH109N
EX MH109O
EX MH109P
EX MH109Q
EX MH109R
EX MH109S
EX MH109T
EX MH109U
EX MH109V
EX MH109W
EX MH109X
EX MH109Y
EX MH109Z
EX MH110A
EX MH110B
EX MH110C
EX MH110D
EX MH110E
EX MH110F
EX MH110G
EX MH110H
EX MH110I
EX MH110J
EX MH110K
EX MH110L
EX MH110M
EX MH110N
EX MH110O
EX MH110P
EX MH110Q
EX MH110R
EX MH110S
EX MH110T
EX MH110U
EX MH110V
EX MH110W
EX MH110X
EX MH110Y
EX MH110Z
EX MH111A
EX MH111B
EX MH111C
EX MH111D
EX MH111E
EX MH111F
EX MH111G
EX MH111H
EX MH111I
EX MH111J
EX MH111K
EX MH111L
EX MH111M
EX MH111N
EX MH111O
EX MH111P
EX MH111Q
EX MH111R
EX MH111S
EX MH111T
EX MH111U
EX MH111V
EX MH111W
EX MH111X
EX MH111Y
EX MH111Z
EX MH112A
EX MH112B
EX MH112C
EX MH112D
EX MH112E
EX MH112F
EX MH112G
EX MH112H
EX MH112I
EX MH112J
EX MH112K
EX MH112L
EX MH112M
EX MH112N
EX MH112O
EX MH112P
EX MH112Q
EX MH112R
EX MH112S
EX MH112T
EX MH112U
EX MH112V
EX MH112W
EX MH112X
EX MH112Y
EX MH112Z
EX MH113A
EX MH113B
EX MH113C
EX MH113D
EX MH113E
EX MH113F
EX MH113G
EX MH113H
EX MH113I
EX MH113J
EX MH113K
EX MH113L
EX MH113M
EX MH113N
EX MH113O
EX MH113P
EX MH113Q
EX MH113R
EX MH113S
EX MH113T
EX MH113U
EX MH113V
EX MH113W
EX MH113X
EX MH113Y
EX MH113Z
EX MH114A
EX MH114B
EX MH114C
EX MH114D
EX MH114E
EX MH114F
EX MH114G
EX MH114H
EX MH114I
EX MH114J
EX MH114K
EX MH114L
EX MH114M
EX MH114N
EX MH114O
EX MH114P
EX MH114Q
EX MH114R
EX MH114S
EX MH114T
EX MH114U
EX MH114V
EX MH114W
EX MH114X
EX MH114Y
EX MH114Z
EX MH115A
EX MH115B
EX MH115C
EX MH115D
EX MH115E
EX MH115F
EX MH115G
EX MH115H
EX MH115I
EX MH115J
EX MH115K
EX MH115L
EX MH115M
EX MH115N
EX MH115O
EX MH115P
EX MH115Q
EX MH115R
EX MH115S
EX MH115T
EX MH115U
EX MH115V
EX MH115W
EX MH115X
EX MH115Y
EX MH115Z
EX MH116A
EX MH116B
EX MH116C
EX MH116D
EX MH116E
EX MH116F
EX MH116G
EX MH116H
EX MH116I
EX MH116J
EX MH116K
EX MH116L
EX MH116M
EX MH116N
EX MH116O
EX MH116P
EX MH116Q
EX MH116R
EX MH116S
EX MH116T
EX MH116U
EX MH116V
EX MH116W
EX MH116X
EX MH116Y
EX MH116Z
EX MH117A
EX MH117B
EX MH117C
EX MH117D
EX MH117E
EX MH117F
EX MH117G
EX MH117H
EX MH117I
EX MH117J
EX MH117K
EX MH117L
EX MH117M
EX MH117N
EX MH117O
EX MH117P
EX MH117Q
EX MH117R
EX MH117S
EX MH117T
EX MH117U
EX MH117V
EX MH117W
EX MH117X
EX MH117Y
EX MH117Z
EX MH118A
EX MH118B
EX MH118C
EX MH118D
EX MH118E
EX MH118F
EX MH118G
EX MH118H
EX MH118I
EX MH118J
EX MH118K
EX MH118L
EX MH118M
EX MH118N
EX MH118O
EX MH118P
EX MH118Q
EX MH118R
EX MH118S
EX MH118T
EX MH118U
EX MH118V
EX MH118W
EX MH118X
EX MH118Y
EX MH118Z
EX MH119A
EX MH119B
EX MH119C
EX MH119D
EX MH119E
EX MH119F
EX MH119G
EX MH119H
EX MH119I
EX MH119J
EX MH119K
EX MH119L
EX MH119M
EX MH119N
EX MH119O
EX MH119P
EX MH119Q
EX MH119R
EX MH119S
EX MH119T
EX MH119U
EX MH119V
EX MH119W
EX MH119X
EX MH119Y
EX MH119Z
EX MH120A
EX MH120B
EX MH120C
EX MH120D
EX MH120E
EX MH120F
EX MH120G
EX MH120H
EX MH120I
EX MH120J
EX MH120K
EX MH120L
EX MH120M
EX MH120N
EX MH120O
EX MH120P
EX MH120Q
EX MH120R
EX MH120S
EX MH120T
EX MH120U
EX MH120V
EX MH120W
EX MH120X
EX MH120Y
EX MH120Z
EX MH121A
EX MH121B
EX MH121C
EX MH121D
EX MH121E
EX MH121F
EX MH121G
EX MH121H
EX MH121I
EX MH121J
EX MH121K
EX MH121L
EX MH121M
EX MH121N
EX MH121O
EX MH121P
EX MH121Q
EX MH121R
EX MH121S
EX MH121T
EX MH121U
EX MH121V
EX MH121W
EX MH121X
EX MH121Y
EX MH121Z
EX MH122A
EX MH122B
EX MH122C
EX MH122D
EX MH122E
EX MH122F
EX MH122G
EX MH122H
EX MH122I
EX MH122J
EX MH122K
EX MH122L
EX MH122M
EX MH122N
EX MH122O
EX MH122P
EX MH122Q
EX MH122R
EX MH122S
EX MH122T
EX MH122U
EX MH122V
EX MH122W
EX MH122X
EX MH122Y
EX MH122Z
EX MH123A
EX MH123B
EX MH123C
EX MH123D
EX MH123E
EX MH123F
EX MH123G
EX MH123H
EX MH123I
EX MH123J
EX MH123K
EX MH123L
EX MH123M
EX MH123N
EX MH123O
EX MH123P
EX MH123Q
EX MH123R
EX MH123S
EX MH123T
EX MH123U
EX MH123V
EX MH123W
EX MH123X
EX MH123Y
EX MH123Z
EX MH124A
EX MH124B
EX MH124C
EX MH124D
EX MH124E
EX MH124F
EX MH124G
EX MH124H
EX MH124I
EX MH124J
EX MH124K
EX MH124L
EX MH124M
EX MH124N
EX MH124O
EX MH124P
EX MH124Q
EX MH124R
EX MH124S
EX MH124T
EX MH124U
EX MH124V
EX MH124W
EX MH124X
EX MH124Y
EX MH124Z
EX MH125A
EX MH125B
EX MH125C
EX MH125D
EX MH125E
EX MH125F
EX MH125G
EX MH125H
EX MH125I
EX MH125J
EX MH125K
EX MH125L
EX MH125M
EX MH125N
EX MH125O
EX MH125P
EX MH125Q
EX MH125R
EX MH125S
EX MH125T
EX MH125U
EX MH125V
EX MH125W
EX MH125X
EX MH125Y
EX MH125Z
EX MH126A
EX MH126B
EX MH126C
EX MH126D
EX MH126E
EX MH126F
EX MH126G
EX MH126H
EX MH126I
EX MH126J
EX MH126K
EX MH126L
EX MH126M
EX MH126N
EX MH126O
EX MH126P
EX MH126Q
EX MH126R
EX MH126S
EX MH126T
EX MH126U
EX MH126V
EX MH126W
EX MH126X
EX MH126Y
EX MH126Z
EX MH127A
EX MH127B
EX MH127C
EX MH127D
EX MH127E
EX MH127F
EX MH127G
EX MH127H
EX MH127I
EX MH127J
EX MH127K
EX MH127L
EX MH127M
EX MH127N
EX MH127O
EX MH127P
EX MH127Q
EX MH127R
EX MH127S
EX MH127T
EX MH127U
EX MH127V
EX MH127W
EX MH127X
EX MH127Y
EX MH127Z
EX MH128A
EX MH128B
EX MH128C
EX MH128D
EX MH128E
EX MH128F
EX MH128G
EX MH128H
EX MH128I
EX MH128J
EX MH128K
EX MH128L
EX MH128M
EX MH128N
EX MH128O
EX MH128P
EX MH128Q
EX MH128R
EX MH128S
EX MH128T
EX MH128U
EX MH128V
EX MH128W
EX MH128X
EX MH128Y
EX MH128Z
EX MH129A
EX MH129B
EX MH129C
EX MH129D
EX MH129E
EX MH129F
EX MH129G
EX MH129H
EX MH129I
EX MH129J
EX MH129K
EX MH129L
EX MH129M
EX MH129N
EX MH129O
EX MH129P
EX MH129Q
EX MH129R
EX MH129S
EX MH129T
EX MH129U
EX MH129V
EX MH129W
EX MH129X
EX MH129Y
EX MH129Z
EX MH130A
EX MH130B
EX MH130C
EX MH130D
EX MH130E
EX MH130F
EX MH130G
EX MH130H
EX MH130I
EX MH130J
EX MH130K
EX MH130L
EX MH130M
EX MH130N
EX MH130O
EX MH130P
EX MH130Q
EX MH130R
EX MH130S
EX MH130T
EX MH130U
EX MH130V
EX MH130W
EX MH130X
EX MH130Y
EX MH130Z
EX MH131A
EX MH131B
EX MH131C
EX MH131D
EX MH131E
EX MH131F
EX MH131G
EX MH131H
EX MH131I
EX MH131J
EX MH131K
EX MH131L
EX MH131M
EX MH131N
EX MH131O
EX MH131P
EX MH131Q
EX MH131R
EX MH131S
EX MH131T
EX MH131U
EX MH131V
EX MH131W
EX MH131X
EX MH131Y
EX MH131Z
EX MH132A
EX MH132B
EX MH132C
EX MH132D
EX MH132E
EX MH132F
EX MH132G
EX MH132H
EX MH132I
EX MH132J
EX MH132K
EX MH132L
EX MH132M
EX MH132N
EX MH132O
EX MH132P
EX MH132Q
EX MH132R
EX MH132S
EX MH132T
EX MH132U
EX MH132V
EX MH132W
EX MH132X
EX MH132Y
EX MH132Z
EX MH133A
EX MH133B
EX MH133C
EX MH133D
EX MH133E
EX MH133F
EX MH133G
EX MH133H
EX MH133I
EX MH133J
EX MH133K
EX MH133L
EX MH133M
EX MH133N
EX MH133O
EX MH133P
EX MH133Q
EX MH133R
EX MH133S
EX MH133T
EX MH133U
EX MH133V
EX MH133W
EX MH133X
EX MH133Y
EX MH133Z
EX MH134A
EX MH134B
EX MH134C
EX MH134D
EX MH134E
EX MH134F
EX MH134G
EX MH134H
EX MH134I
EX MH134J
EX MH134K
EX MH134L
EX MH134M
EX MH134N
EX MH134O
EX MH134P
EX MH134Q
EX MH134R
EX MH134S
EX MH134T
EX MH134U
EX MH134V
EX MH134W
EX MH134X
EX MH134Y
EX MH134Z
EX MH135A
EX MH135B
EX MH135C
EX MH135D
EX MH135E
EX MH135F
EX MH135G
EX MH135H
EX MH135I
EX MH135J
EX MH135K
EX MH135L
EX MH135M
EX MH135N
EX MH135O
EX MH135P
EX MH135Q
EX MH135R
EX MH135S
EX MH135T
EX MH135U
EX MH135V
EX MH135W
EX MH135X
EX MH135Y
EX MH135Z
EX MH136A
EX MH136B
EX MH136C
EX MH136D
EX MH136E
EX MH136F
EX MH136G
EX MH136H
EX MH136I
EX MH136J
EX MH136K
EX MH136L
EX MH136M
EX MH136N
EX MH136O
EX MH136P
EX MH136Q
EX MH136R
EX MH136S
EX MH136T
EX MH136U
EX MH136V
EX MH136W
EX MH136X
EX MH136Y
EX MH136Z
EX MH137A
EX MH137B
EX MH137C
EX MH137D
EX MH137E
EX MH137F
EX MH137G
EX MH137H
EX MH137I
EX MH137J
EX MH137K
EX MH137L
EX MH137M
EX MH137N
EX MH137O
EX MH137P
EX MH137Q
EX MH137R
EX MH137S
EX MH137T
EX MH137U
EX MH137V
EX MH137W
EX MH137X
EX MH137Y
EX MH137Z
EX MH138A
EX MH138B
EX MH138C
EX MH138D
EX MH138E
EX MH138F
EX MH138G
EX MH138H
EX MH138I
EX MH138J
EX MH138K
EX MH138L
EX MH138M
EX MH138N
EX MH138O
EX MH138P
EX MH138Q
EX MH138R
EX MH138S
EX MH138T
EX MH138U
EX MH138V
EX MH138W
EX MH138X
EX MH138Y
EX MH138Z
EX MH139A
EX MH139B
EX MH139C
EX MH139D
EX MH139E
EX MH139F
EX MH139G
EX MH139H
EX MH139I
EX MH139J
EX MH139K
EX MH139L
EX MH139M
EX MH139N
EX MH139O
EX MH139P
EX MH139Q
EX MH139R
EX MH139S
EX MH139T
EX MH139U
EX MH139V
EX MH139W
EX MH139X
EX MH139Y
EX MH139Z
EX MH140A
EX MH140B
EX MH140C
EX MH140D
EX MH140E
EX MH140F
EX MH140G
EX MH140H
EX MH140I
EX MH140J
EX MH140K
EX MH140L
EX MH140M
EX MH140N
EX MH140O
EX MH140P
EX MH140Q
EX MH140R
EX MH140S
EX MH140T
EX MH140U
EX MH140

was assumed to have 4 washbasins that deliver 375 L/d and four (4) water closets that generate 150 L/hr for 10 hr/day resulting in a total flow of 7500 L/day.

Table 6-3: Land Use and Theoretical Wastewater Flows

Land Use	Flow Rate	Area (ha)	Units	Pop.	Average Flow (L/S)	Peak Factor	Infiltration	Total Flows (L/s)
Minto and Mattamy Lands								
Schools	28,000 L/ha/d	4.55			1.50	1.5	1.50	3.8
Park Block	4 L/s	4.39			4.0	1	1.45	5.5
Commercial	28,000 L/ha/d	2.13			0.70	1.5	0.70	1.8
Low-Medium density Residential	280 l/c/d	35.26	1080	3378	11.0	2.92	11.64	43.6
High Density Residential	280 l/c/d	0.90	120	216	0.7	3.51	0.30	2.8
Roads	-	27.00				1	8.91	8.9
Park and Ride		2.57			0.1	1	0.85	1.0
Total		**76.8**	**1200**	**3594**	**17.95**		**25.35**	**67.4**
Brazeau Aggregate Extraction Area								
Schools	28,000 L/ha/d	1.47			0.48	1.5	0.49	1.2
Commercial	28,000 L/ha/d	0.67			0.22	1.5	0.22	0.6
Low-Medium Density Residential	280 l/c/d	10.27	360	1126	3.65	3.21	3.39	15.1
High Density Residential	280 l/c/d	0.28	38	68	0.22	3.63	0.09	0.9
Roads	-	7.95				1	2.62	2.6
Park Block	-	1.48				1	0.49	0.5
Pond Blocks	-	1.78				1	0.59	0.6
Total		**23.9**		**1194**	**4.57**		**7.89**	**21.5**
Drummond Aggregate Extraction Area								
Schools	28,000 L/ha/d	1.25			0.41	1.5	0.41	1.0
Commercial	28,000 L/ha/d	0.57			0.18	1.5	0.19	0.5
Low-Medium Density Residential	280 l/c/d	8.72	288	900	2.92	3.26	2.88	12.4
High Density Residential	280 l/c/d	0.24	32	58	0.19	3.64	0.08	0.8
Roads	-	6.75				1	2.23	2.2

Land Use	Flow Rate	Area (ha)	Units	Pop.	Average Flow (L/S)	Peak Factor	Infiltration	Total Flows (L/s)
Park Blocks	-	1.26				1	0.42	0.4
Pond Blocks	-	1.51				1	0.50	0.5
Total		**20.3**		**958**	**3.70**		**6.71**	**17.8**
Barrhaven South Urban Expansion Area Totals								
Total		**121.0**		**5746**	**26.22**		**40.0**	**106.7**

Based on the land uses presented on the Demonstration Plan (Figure 4-2), the BSUEA would generate a peak wastewater flow of approximately 106.7 L/s.

6.3 Wastewater Collection System Strategy

6.3.1 Proposed Sewer System Layout and Sizing

A trunk sanitary sewer system layout was developed based on the ROW corridors identified on the BSUEA Demonstration Plan for the purposes of demonstrating the feasibility of providing wastewater servicing for the BSUEA lands, refer to the Key Servicing Plans. Proposed trunk sanitary sewers were sized based on the aforementioned design criteria and the drainage areas depicted on the Master Sanitary Drainage Area Drawing MSAN, refer to the BSUEA Sanitary Sewer Design Sheet (Appendix J) for detailed calculations. Final configuration and sizing of the wastewater collection system will be confirmed at detailed design of each subdivision stage. At such time, refinements may be implemented.

The proposed BSUEA trunk sanitary sewers will discharge to existing/planned sanitary sewers at the following six (6) locations, as shown on Figure 6-2:

1. The Future Collector Road
2. New Greenbank Road
3. Flameflower Street
4. Alex Polowin Avenue
5. Kilbirnie Drive
6. Greenbank Road

It is noted that the residual capacity in the River Mist Road trunk sanitary sewer has in fact increased with the addition of the BSUEA peak flows. This is the result of adding a relatively small tributary area while reducing the average daily residential flow from 350 L/cap to 280 L/cap combined with diverting some existing drainage areas, located in Quinn's Pointe, away from the outlet.

Table 6-4: Residual Capacity Comparison in the BSC Trunk Sanitary Sewers

Existing Trunk Sanitary Sewer	Limiting Pipe reach	Current Minimum Residual Capacity	Proposed BSUEA Tributary Lands	Proposed BSUEA Tributary Area	Revised Minimum Residual Capacity with inclusion of BSUEA Peak Flow
Cambrian Road	MH 13A to MH15A	51.4 L/s	Drummond, Brazeau, Mattamy West (Residential only)	48 ha	52.9 L/s
River Mist Road	MH 102A to MH 17A	14.4 L/s	Mattamy East, Mattamy West (Commercial only), Northwest corner of Minto	12 ha	30.5 L/s
River Mist Road	MH 1 to MH 163	5.58 L/s	Minto	5 ha	4.63 L/s
Greenbank Road	MH 45 to MH 435A	295.4 L/s	Minto	60 ha	283.2 L/s

With the addition of the BSUEA lands, a total theoretical peak wastewater flow of 403.7 L/s was calculated at the most downstream maintenance hole in the BSC (MH 501A on Greenbank Road), as indicated in the Sanitary Sewer Design Sheet in Appendix J. This calculated theoretical peak flow is less than the 590 L/s allocated for all of the BSC in Stantec's City-wide 2013 Wastewater Collection System Assessment. In this assessment, Stantec created a hydrodynamic model of trunk sanitary sewers (450 mm in diameter and greater) which demonstrated that the existing downstream trunk system could accommodate the theoretical flow of 590 L/s generated by the BSC with no risk of surcharging or basement flooding. Consequently, Stantec concluded that system upgrades were not required to accommodate the anticipated growth in the BSC. Since the Stantec assessment considered a peak flow that was 186 L/s greater than that calculated for the BSC and the BSUEA combined, it is understood that the existing trunk sanitary sewers located downstream of the BSC can accommodate the additional flows generated by the BSUEA.

SWM POND BLOCK AS PER CAIVAN - THE RIDGE CITY FILE No. D07-16-19-0005

CAIVAN - ABIC GRADING PLAN PREPARED BY DSEL, DECEMBER 2019.

TAMARACK - THE MEADOWS IN HALF MOON BAY CITY FILE No. D07-16-18-0011

FUTURE SCHOOL

FUTURE DELPHINUS AVE

JACKDAW AVE

SCHOOL

FUTURE GREENBANK ROAD

DUNDONALD DR

URBAN BOUNDARY

EXPANSION ROAD

HAIKU STREET

HAIKU STREET

ELEVATION ROAD

OBSIDIAN STREET

PARK

1.45
205A-206A
PARK

EXTERNAL DRAINAGE AREA AND SANITARY SEWER DESIGN WITHIN FUTURE GREENBANK ROAD PER TAMARACK-THE MEADOWS IN HALF MOON BAY PREPARED BY DSEL PROJECT NO. 1089 DATED 2019-09-10

MH 1090A - MH 405A REFER TO CAIVAN - THE RIDGE CITY FILE No. D07-16-19-0005

CAIVAN - THE RIDGE CITY FILE No. D07-16-19-0005

A=23.91Ha — COMMERCIAL — TO MH 26A

A=28.51Ha — 2340 — RESIDENTIAL — TO MH 26A

A=3.17Ha — PARK — TO MH 26A

LEGEND

- SUBJECT LANDS
- SANITARY TRUNK
- LOCAL SANITARY SEWER
- EXISTING SANITARY SEWER
- SANITARY SEWER BY OTHERS
- URBAN BOUNDARY
- SANITARY DRAINAGE AREA
- EXTERNAL SANITARY DRAINAGE AREA

7.50Ha / 85 / 638 / MH UP / MH DOWN / RESIDENTIAL — SANITARY DRAINAGE AREA; POPULATION PER HECTARE; TOTAL POPULATION; UPSTREAM MANHOLE; DOWNSTREAM MANHOLE; TRIB TYPE

- SANITARY MANHOLE
- FUTURE SANITARY MANHOLE

1.05Ha / 10A-11A / PARK — NON-RESIDENTIAL SANITARY DRAINAGE AREA; UPSTREAM MANHOLE-DOWNSTREAM MANHOLE; TRIB TYPE

6.06Ha / 902A-903A — EXTERNAL SANITARY DRAINAGE AREA; UPSTREAM MANHOLE-DOWNSTREAM MANHOLE

101.87 T/G / 94.522 OBV — TOP OF GRATE; PROPOSED SANITARY OBVERT

A=10.00Ha / 100 / COMMERCIAL / TO MH 10A — FUT. EXTERNAL SANITARY DRAINAGE AREA; POPULATION; TRIB TYPE; DOWNSTREAM MANHOLE

DSEL
david schaeffer engineering ltd
120 Iber Road, Unit 103
Stittsville, Ontario, K2S 1E9
Tel. (613) 836-0856
Fax. (613) 836-7183
www.DSEL.ca

CAIVAN GREENBANK NORTH INC.

CITY OF OTTAWA

SANITARY SERVICING PLAN

SCALE:	1:1000	PROJECT No.:	19-1123
DATE:	MAY 2020	DRAWING:	3

SANITARY SEWER CALCULATION SHEET

Manning's n=0.013

LOCATION			RESIDENTIAL AREA AND POPULATION							COMM		INSTIT		PARK		C+I+I	INFILTRATION				PIPE						
STREET	FROM M.H.	TO M.H.	AREA (ha)	UNITS	POP.	CUMULATIVE AREA (ha)	CUMULATIVE POP.	PEAK FACT.	PEAK FLOW (l/s)	AREA (ha)	ACCU. AREA (ha)	AREA (ha)	ACCU. AREA (ha)	AREA (ha)	ACCU. AREA (ha)	PEAK FLOW (l/s)	TOTAL AREA (ha)	ACCU. AREA (ha)	INFILT. FLOW (l/s)	TOTAL FLOW (l/s)	DIST (m)	DIA (mm)	SLOPE (%)	CAP. (FULL) (l/s)	RATIO Q act/Q cap	VEL. (FULL) (m/s)	VEL. (ACT.) (m/s)
Unknown Road4 - 04																											
			0.14		12	0.14	12				0.00		0.00		0.00		0.14	0.14									
			0.31		27	0.45	39				0.00		0.00		0.00		0.31	0.45									
	113A	114A	2.45		208	2.90	247	3.5	2.79		0.00		0.00		0.00	0.00	2.45	2.90	0.96	3.75	55.0	250	0.25	29.7	0.13	0.61	0.41
	114A	115A	0.29		25	3.19	272	3.5	3.06		0.00		0.00		0.00	0.00	0.29	3.19	1.05	4.12	67.0	250	0.25	29.7	0.14	0.61	0.42
	115A	128A	0.27		23	3.46	295	3.5	3.31		0.00		0.00		0.00	0.00	0.27	3.46	1.14	4.45	67.0	250	0.25	29.7	0.15	0.61	0.43
			0.27		23	3.73	318				0.00		0.00		0.00		0.27	3.73									
			0.29		25	4.02	343				0.00		0.00		0.00		0.29	4.02									
			0.33		29	4.35	372				0.00		0.00		0.00		0.33	4.35									
	128A	137A	3.02		257	7.37	629	3.3	6.80		0.00		0.00		0.00	0.00	3.02	7.37	2.43	9.23	58.5	250	0.25	29.7	0.31	0.61	0.53
To Unknown Road19 - 17, Pipe 137A - 138A						7.37	629				0.00		0.00		0.00			7.37									
Unknown Road19 - 17																											
Contribution From Unknown Road4 - 04, Pipe 128A - 137A						7.37	629				0.00		0.00		0.00		7.37	7.37									
Contribution From Unknown Road18 - 16, Pipe 136A - 137A						2.75	238				0.00		0.00		0.00		2.75	10.12									
			0.06		6	10.18	873				0.00		0.00		0.00		0.06	10.18									
	137A	138A	0.55		47	10.73	920	3.3	9.71		0.00		0.00		0.00	0.00	0.55	10.73	3.54	13.26	111.5	250	0.25	29.7	0.45	0.61	0.59
	138A	143A	0.63		54	11.36	974	3.2	10.25		0.00		0.00		0.00	0.00	0.63	11.36	3.75	13.99	111.5	250	0.25	29.7	0.47	0.61	0.60
			0.44		38	11.80	1012				0.00		0.00		0.00		0.44	11.80									
	143A	144A	0.56		48	12.36	1060	3.2	11.08		0.00		0.00		0.00	0.00	0.56	12.36	4.08	15.16	79.5	250	0.25	29.7	0.51	0.61	0.61
	144A	155A	0.49		42	12.85	1102	3.2	11.49		0.00		0.00		0.00	0.00	0.49	12.85	4.24	15.73	88.5	250	0.25	29.7	0.53	0.61	0.61
To Unknown Road11 - 100, Pipe 155A - 405A						12.85	1102				0.00		0.00		0.00			12.85									
Unknown Road11 - 100																											
Contribution From Unknown Road19 - 17, Pipe 144A - 155A						12.85	1102				0.00		0.00		0.00		12.85	12.85									
			0.02		2	12.87	1104				0.00		0.00		0.00		0.02	12.87									
	155A	405A	2.03		173	14.90	1277	3.2	13.17		0.00		0.00		0.00	0.00	2.03	14.90	4.92	18.09	28.0	250	0.25	29.7	0.61	0.61	0.63
To Unknown Road17 - 15, Pipe 405A - 406A						14.90	1277				0.00		0.00		0.00			14.90									
Unknown Road17 - 15																											
Contribution From Unknown Road11 - 100, Pipe 155A - 405A						14.90	1277				0.00		0.00		0.00		14.90	14.90									
						14.90	1277			23.91	23.91	6.06	6.06	3.17	3.17		33.14	48.04									
						14.90	1277				23.91		6.06		3.17		0.00	48.04									
			0.96		0	15.86	1277				23.91		6.06		3.17		0.96	49.00									
			0.61		0	16.47	1277				23.91		6.06		3.17		0.61	49.61									
			1.11		95	17.58	1372				23.91		6.06		3.17		1.11	50.72									
	405A	406A	28.51		2340	46.09	3712	2.9	34.76		23.91		6.06		3.17	10.05	28.51	79.23	26.15	70.96	28.5	375	0.25	87.7	0.81	0.79	0.88
Unknown Road18 - 16																											
			0.30		26	0.30	26				0.00		0.00	1.45	1.45		1.75	1.75									
	205A	206A	0.99		85	1.29	111	3.6	1.29		0.00		0.00		1.45	0.16	0.99	2.74	0.90	2.35	62.0	200	0.65	26.4	0.09	0.84	0.52
			0.22		19	1.51	130				0.00		0.00		1.45		0.22	2.96									
	206A	211A	1.28		109	2.79	239	3.5	2.71		0.00		0.00		1.45	0.16	1.28	4.24	1.40	4.26	59.0	200	0.35	19.4	0.22	0.62	0.49
	211A	212A	0.11		10	2.90	249	3.5	2.82		0.00		0.00		1.45	0.16	0.11	4.35	1.44	4.41	29.5	200	0.35	19.4	0.23	0.62	0.50
	132A	133A	0.32		28	0.32	28	3.7	0.33		0.00		0.00		0.00	0.00	0.32	0.32	0.11	0.44	66.0	200	0.65	26.4	0.02	0.84	0.30

DESIGN PARAMETERS

Park Flow =	9300	L/ha/da	0.10764	l/s/Ha				
Average Daily Flow =	280	l/p/day			Industrial Peak Factor = as per MOE Graph			
Comm/Inst Flow =	28000	L/ha/da	0.3241	l/s/Ha	Extraneous Flow =	0.330	L/s/ha	
Industrial Flow =	35000	L/ha/da	0.40509	l/s/Ha	Minimum Velocity =	0.600	m/s	
Max Res. Peak Factor =	4.00				Manning's n = (Conc)	0.013	(Pvc)	0.013
Commercial/Inst./Park Peak Factor =	1.00				Townhouse coeff=	2.7		
Institutional =	0.32	l/s/Ha			Single house coeff=	3.4		

Designed: AK	PROJECT: **Caivan - Drummond Lands**		
Checked: ADF	LOCATION: **City of Ottawa**		
Dwg. Reference: Sanitary Drainage Plan, Dwgs. No. 3	File Ref: 19-1123	Date: **11 May 2020**	Sheet No. 1 of 2

SANITARY SEWER CALCULATION SHEET

Manning's n=0.013

LOCATION				RESIDENTIAL AREA AND POPULATION							COMM		INSTIT		PARK		C+I+I	INFILTRATION				PIPE						
STREET		FROM M.H.	TO M.H.	AREA (ha)	UNITS	POP.	CUMULATIVE AREA (ha)	CUMULATIVE POP.	PEAK FACT.	PEAK FLOW (l/s)	AREA (ha)	ACCU. AREA (ha)	AREA (ha)	ACCU. AREA (ha)	AREA (ha)	ACCU. AREA (ha)	PEAK FLOW (l/s)	TOTAL AREA (ha)	ACCU. AREA (ha)	INFILT. FLOW (l/s)	TOTAL FLOW (l/s)	DIST (m)	DIA (mm)	SLOPE (%)	CAP. (FULL) (l/s)	RATIO Q act/Q cap	VEL. (FULL) (m/s)	VEL. (ACT.) (m/s)
				0.02		2	0.34	30				0.00		0.00		0.00		0.02	0.34									
				0.18		16	0.52	46				0.00		0.00		0.00		0.18	0.52									
		133A	134A	0.98		84	1.50	130	3.6	1.50		0.00		0.00		0.00	0.00	0.98	1.50	0.50	2.00	54.0	200	0.35	19.4	0.10	0.62	0.40
		134A	135A	0.13		12	1.63	142	3.6	1.64		0.00		0.00		0.00	0.00	0.13	1.63	0.54	2.18	10.5	200	0.35	19.4	0.11	0.62	0.41
		135A	136A	0.62		53	2.25	195	3.5	2.23		0.00		0.00		0.00	0.00	0.62	2.25	0.74	2.97	103.5	200	0.35	19.4	0.15	0.62	0.44
		136A	137A	0.50		43	2.75	238	3.5	2.70		0.00		0.00		0.00	0.00	0.50	2.75	0.91	3.60	103.5	200	0.35	19.4	0.19	0.62	0.47
To Unknown Road19 - 17, Pipe 137A - 138A							2.75	238				0.00		0.00		0.00			2.75									

DESIGN PARAMETERS

Park Flow =	9300	L/ha/da	0.10764	l/s/Ha			
Average Daily Flow =	280	l/p/day			Industrial Peak Factor = as per MOE Graph		
Comm/Inst Flow =	28000	L/ha/da	0.3241	l/s/Ha	Extraneous Flow =	0.330	L/s/ha
Industrial Flow =	35000	L/ha/da	0.40509	l/s/Ha	Minimum Velocity =	0.600	m/s
Max Res. Peak Factor =	4.00				Manning's n = (Conc)	0.013	(Pvc) 0.013
Commercial/Inst./Park Peak Factor =	1.00				Townhouse coeff=	2.7	
Institutional =	0.32	l/s/Ha			Single house coeff=	3.4	

Designed: AK	PROJECT: **Cavian - Drummond Lands**		
Checked: ADF	LOCATION: **City of Ottawa**		
Dwg. Reference: Sanitary Drainage Plan, Dwgs. No. 3	File Ref: 19-1123	Date: **11 May 2020**	Sheet No 2 of 2

MH405A as proposed in The Ridge sanitary outlet design

CONTINUED ON PAGE

avenue Delphinus Avenue

ant Sonmarg Crescent

avenue Jackdaw Avenue

voie Pine Warbler Way

JACKDAW

CAMBRIAN ROAD

FUTURE GREENBANK ROAD

Elevation Road

Haiku Street

Focality Crescent

Obsidian Street

TO GREENBANK

TO MH 310A

TO SAN CTRL MH 3A

REFER TO DWG No. 83

REFER TO DWG No. 18

FUT. GREENBANK ROAD SANITARY SEWER
SCALE 1:2000

KEY PLAN
SCALE 1:15000

LEGEND

- SANITARY DRAINAGE BOUNDARY
- SANITARY SUB-DRAINAGE BOUNDARY
- SANITARY DRAINAGE BOUNDARY (OTHER PHASES)
- UPSTREAM MH TO DOWNSTREAM MH — 43A - 44A
- AREA IN HECTARES — 0.78
- DENOTES PARK — 61
- POPULATION
- UPSTREAM MH TO DOWNSTREAM MH (OTHER PHASES) — 309A-310A
- AREA IN HECTARES (OTHER PHASES) — 12.95
- POPULATION (OTHER PHASES) — 1102
- EXTERNAL AREA IN HECTARES — A=53.63
- EXTERNAL POPULATION — 107
- DENSITY (PERSONS/HECTARE) — POP=5739
- EXTERNAL LAND USE — RESIDENTIAL
- MAINTENANCE HOLE — 300mmø SAN MH202A
- CAP

NOT FOR CONSTRUCTION

No.	BY	DATE	DESCRIPTION
4	A.D.F.	20-04-24	3RD SUBMISSION
3	A.D.F.	19-12-23	2ND SUBMISSION
2	A.D.F.	19-10-04	1ST SUBMISSION
1	A.D.F.	19-09-19	ISSUED FOR CLIENT REVIEW

TOPOGRAPHIC INFORMATION
JD BARNES LIMITED PROJECT NUMBER 18-10-145-00 SURVEY DATED JULY 26, 2019

LEGAL INFORMATION
CALCULATED M-PLAN PROVIDED BY JD BARNES LTD, PROJECT 18-10-145-00, DATED APRIL 6, 2020

BENCH MARK No. 001196403710
ELEVATIONS SHOWN ON THIS PLAN ARE RELATED TO GEODETIC DATUM AND ARE DERIVED FROM THE MUNICIPALITY BENCHMARK No. 001196403710 HAVING A PUBLISHED ELEVATION OF 91.724 METERS.

CAIVAN COMMUNITIES

THE RIDGE PHASE 1

DSEL
david schaeffer engineering ltd
120 Iber Road Unit 103
Stittsville, Ontario, K2S 1E9
Tel. (613) 836-0856
Fax. (613) 836-7183
www.DSEL.ca

LICENSED PROFESSIONAL ENGINEER
A. D. FORBERT
100395626
2020-04-24
PROVINCE OF ONTARIO

Ottawa CITY OF OTTAWA

SANITARY DRAINAGE PLAN

© DSEL

DRAWN BY:	G.G.G.	CHECKED BY:	A.D.F.
DESIGNED BY:	C.M.K.	CHECKED BY:	A.D.F.
SCALE:		PROJECT No.	18-1030
HORIZ. 1:1000	0 10 20 30 40	SHEET No.	82

CITY FILE No. D07-16-19-0005 CITY PLAN No. XXXXXX

SANITARY SEWER CALCULATION SHEET

Manning's n=0.013

LOCATION			RESIDENTIAL AREA AND POPULATION									COMM		INSTIT		PARK		C+I+I	INFILTRATION				PIPE						
STREET	FROM M.H.	TO M.H.	AREA	UNITS	UNITS Singles	UNITS Townhouse	POP.	CUMULATIVE AREA	CUMULATIVE POP.	PEAK FACT.	PEAK FLOW	AREA	ACCU. AREA	AREA	ACCU. AREA	AREA	ACCU. AREA	PEAK FLOW	TOTAL AREA	ACCU. AREA	INFILT. FLOW	TOTAL FLOW	DIST	DIA	SLOPE	CAP. (FULL)	RATIO Q act/Q cap	VEL. (FULL)	VEL. (ACT.)
			(ha)					(ha)			(l/s)	(ha)	(ha)	(ha)	(ha)	(ha)	(ha)	(l/s)	(ha)	(ha)	(l/s)	(l/s)	(m)	(mm)	(%)	(l/s)		(m/s)	(m/s)
Drummond Future Road																													
	Plug	305A	0.89				67	0.89	67	3.63	0.79		0.00		0.00		0.00	0.00	0.89	0.89	0.29	1.08	8.0	200	0.35	19.40	0.06	0.62	0.33
To Expansion Road, Pipe 305A - 306A								0.89	67				0.00		0.00		0.00			0.89									
Future Residential																													
	Ctrl 3A	109A	1.90				162	1.90	162	3.54	1.86		0.00		0.00		0.00	0.00	1.90	1.90	0.63	2.49	11.0	200	0.35	19.40	0.13	0.62	0.42
To Obsidian Street, Pipe 109A - 400A								1.90	162				0.00		0.00		0.00			1.90									
Focality Crescent																													
	107A	108A	0.14	3		3	9	0.14	9	3.74	0.11		0.00		0.00		0.00	0.00	0.14	0.14	0.05	0.16	12.5	200	2.45	51.34	0.00	1.63	0.36
	108A	110A	0.17	5		5	14	0.31	23	3.70	0.28		0.00		0.00		0.00	0.00	0.17	0.31	0.10	0.38	50.5	200	0.35	19.40	0.02	0.62	0.24
To Haiku Street, Pipe 110A - 1100A								0.31	23				0.00		0.00		0.00			0.31									
	107A	112A	0.45	18		18	49	0.45	49	3.65	0.58		0.00		0.00		0.00	0.00	0.45	0.45	0.15	0.73	73.5	200	0.70	27.44	0.03	0.87	0.37
	112A	113A	0.43	16		16	44	0.88	93	3.60	1.09		0.00		0.00		0.00	0.00	0.43	0.88	0.29	1.38	70.5	200	0.35	19.40	0.07	0.62	0.36
	113A	114A	0.12	3		3	9	1.00	102	3.59	1.19		0.00		0.00		0.00	0.00	0.12	1.00	0.33	1.52	12.5	200	0.35	19.40	0.08	0.62	0.36
	114A	115A	0.18	5		5	14	1.18	116	3.58	1.35		0.00		0.00		0.00	0.00	0.18	1.18	0.39	1.74	50.5	200	0.40	20.74	0.08	0.66	0.40
To Haiku Street, Pipe 115A - 111A								1.18	116				0.00		0.00		0.00			1.18									
Sturnidae Street																													
	124A	125A	0.60	18	18		62	0.60	62	3.64	0.73		0.00		0.00		0.00	0.00	0.60	0.60	0.20	0.93	101.0	200	0.65	26.44	0.04	0.84	0.39
	125A	126A	0.50	12	12		41	1.10	103	3.59	1.20		0.00		0.00		0.00	0.00	0.50	1.10	0.36	1.56	91.0	200	0.35	19.40	0.08	0.62	0.37
Contribution From Montology Way, Pipe 123A - 126A								0.81	63				0.00		0.00		0.00		0.81	1.91									
	126A	106A						1.91	166	3.54	1.91		0.00		0.00		0.00	0.00	0.00	1.91	0.63	2.54	63.0	200	0.35	19.40	0.13	0.62	0.42
To Elevation Road, Pipe 106A - 116A								1.91	166				0.00		0.00		0.00			1.91									
Park																													
	Ctrl 4A	104A						0.00					0.00		0.00	1.72	1.72	0.19	1.72	1.72	0.57	0.75	10.5	200	0.35	19.40	0.04	0.62	0.29
To Chillerton Drive, Pipe 104A - 106A								0.00	0				0.00		0.00		1.72			1.72									
Canadensis Lane																													
	229A	230A	0.42	15		15	41	0.42	41	3.67	0.49		0.00		0.00		0.00	0.00	0.42	0.42	0.14	0.63	73.5	200	2.00	46.38	0.01	1.48	0.51
	230A	103A	0.48	18		18	49	0.90	90	3.60	1.05		0.00		0.00		0.00	0.00	0.48	0.90	0.30	1.35	90.0	200	3.00	56.81	0.02	1.81	0.75
To Chillerton Drive, Pipe 103A - 104A								0.90	90				0.00		0.00		0.00			0.90									
Surface Lane																													
	227A	228A	0.47	18		18	49	0.47	49	3.65	0.58		0.00		0.00		0.00	0.00	0.47	0.47	0.16	0.74	72.5	200	2.00	46.38	0.02	1.48	0.53
	228A	102A	0.48	18		18	49	0.95	98	3.60	1.14		0.00		0.00		0.00	0.00	0.48	0.95	0.31	1.46	90.0	200	0.85	30.24	0.05	0.96	0.49
To Chillerton Drive, Pipe 102A - 103A								0.95	98				0.00		0.00		0.00			0.95									
Chillerton Drive																													
	101A	102A	0.14	3		3	9	0.14	9	3.74	0.11		0.00		0.00		0.00	0.00	0.14	0.14	0.05	0.16	25.5	200	2.60	52.89	0.00	1.68	0.34
Contribution From Surface Lane, Pipe 228A - 102A								0.95	98				0.00		0.00		0.00		0.95	1.09									
	102A	103A	0.22	7		7	19	1.31	126	3.57	1.46		0.00		0.00		0.00	0.00	0.22	1.31	0.43	1.89	59.0	200	1.70	42.76	0.04	1.36	0.67

DESIGN PARAMETERS

Park Flow =	9300	L/ha/da	0.10764	l/s/Ha			
Average Daily Flow =	280	l/p/day			Industrial Peak Factor = as per MOE Graph		
Comm/Inst Flow =	28000	L/ha/da	0.3241	l/s/Ha	Extraneous Flow =	0.330	L/s/ha
Industrial Flow =	35000	L/ha/da	0.40509	l/s/Ha	Minimum Velocity =	0.600	m/s
Max Res. Peak Factor =	3.80				Manning's n = (Conc)	0.013	(Pvc) 0.013
Commercial/Inst./Park Peak Factor =	1.00				Townhouse coeff=	2.7	
Institutional =	0.32	l/s/Ha			Single house coeff=	3.4	

Designed: SLM

Checked: ADF

Dwg. Reference: Sanitary Drainage Plan, Dwgs. No. 80-83

PROJECT: **Ciavan Communities - Brazeau Phase 1**

LOCATION: **City of Ottawa**

File Ref: 18-1030

Date: **24 Apr 2020**

Sheet No. 1 of 6

SANITARY SEWER CALCULATION SHEET

Manning's n=0.013

LOCATION			RESIDENTIAL AREA AND POPULATION									COMM		INSTIT		PARK		C+I+I	INFILTRATION				PIPE						
STREET	FROM M.H.	TO M.H.	AREA (ha)	UNITS	UNITS Singles	UNITS Townhouse	POP.	CUMULATIVE AREA (ha)	CUMULATIVE POP.	PEAK FACT.	PEAK FLOW (l/s)	AREA (ha)	ACCU. AREA (ha)	AREA (ha)	ACCU. AREA (ha)	AREA (ha)	ACCU. AREA (ha)	PEAK FLOW (l/s)	TOTAL AREA (ha)	ACCU. AREA (ha)	INFILT. FLOW (l/s)	TOTAL FLOW (l/s)	DIST (m)	DIA (mm)	SLOPE (%)	CAP. (FULL) (l/s)	RATIO Q act/Q cap	VEL (FULL) (m/s)	VEL (ACT.) (m/s)
Contribution From Canadensis Lane, Pipe 230A - 103A								0.90	90				0.00		0.00		0.00		0.90	2.21									
	103A	104A	0.46	14		14	38	2.67	254	3.49	2.87		0.00		0.00		0.00	0.00	0.46	2.67	0.88	3.75	120.0	200	0.50	23.19	0.16	0.74	0.54
Contribution From Park, Pipe 4A - 104A								0.00	0				0.00		0.00		1.72		1.72	4.39									
	104A	106A	0.08	1		1	3	2.75	257	3.49	2.90		0.00		0.00		1.72	0.19	0.08	4.47	1.48	4.56	45.5	200	0.35	19.40	0.24	0.62	0.50
To Elevation Road, Pipe 106A - 116A								2.75	257				0.00		0.00		1.72			4.47									
Epoch Street																													
	220A	221A	0.42	10		10	27	0.42	27	3.69	0.32		0.00		0.00		0.00	0.00	0.42	0.42	0.14	0.46	77.5	200	0.95	31.97	0.01	1.02	0.35
	221A	222A	0.49	18		18	49	0.91	76	3.62	0.89		0.00		0.00		0.00	0.00	0.49	0.91	0.30	1.19	93.0	200	0.35	19.40	0.06	0.62	0.34
	222A	223A	0.52	20		20	54	1.43	130	3.57	1.50		0.00		0.00		0.00	0.00	0.52	1.43	0.47	1.98	100.5	200	0.35	19.40	0.10	0.62	0.40
To Elevation Road, Pipe 223A - 105A								1.43	130				0.00		0.00		0.00			1.43									
Eminence Street																													
	215A	216A	0.49	12	12		41	0.49	41	3.67	0.49		0.00		0.00		0.00	0.00	0.49	0.49	0.16	0.65	75.5	200	0.85	30.24	0.02	0.96	0.39
	216A	217A	0.72	17	17		58	1.21	99	3.60	1.15		0.00		0.00		0.00	0.00	0.72	1.21	0.40	1.55	113.5	200	0.35	19.40	0.08	0.62	0.37
	217A	219A	0.45	12	12		41	1.66	140	3.56	1.62		0.00		0.00		0.00	0.00	0.45	1.66	0.55	2.16	83.5	200	0.35	19.40	0.11	0.62	0.41
To Elevation Road, Pipe 219A - 223A								1.66	140				0.00		0.00		0.00			1.66									
Elevation Road																													
	218A	219A	0.13	2	2		7	0.13	7	3.74	0.08		0.00		0.00		0.00	0.00	0.13	0.13	0.04	0.13	24.0	200	2.65	53.39	0.00	1.70	0.35
Contribution From Eminence Street, Pipe 217A - 219A								1.66	140				0.00		0.00		0.00		1.66	1.79									
	219A	223A	0.23	4	4		14	2.02	161	3.54	1.85		0.00		0.00		0.00	0.00	0.23	2.02	0.67	2.52	59.0	200	0.85	30.24	0.08	0.96	0.58
Contribution From Epoch Street, Pipe 222A - 223A								1.43	130				0.00		0.00		0.00		1.43	3.45									
	223A	105A	0.42	6	6		21	3.87	312	3.46	3.50		0.00		0.00		0.00	0.00	0.42	3.87	1.28	4.77	82.5	200	0.70	27.44	0.17	0.87	0.65
	105A	106A	0.42	7	7		24	4.29	336	3.45	3.75		0.00		0.00		0.00	0.00	0.42	4.29	1.42	5.17	94.0	200	1.30	37.40	0.14	1.19	0.83
Contribution From Chillerton Drive, Pipe 104A - 106A								2.75	257				0.00		0.00		1.72		4.47	8.76									
Contribution From Sturnidae Street, Pipe 126A - 106A								1.91	166				0.00		0.00		0.00		1.91	10.67									
			0.35	11		11	30	9.30	789				0.00		0.00		1.72		0.35	11.02									
	106A	116A	0.35	8	8		28	9.65	817	3.28	8.69		0.00		0.00		1.72	0.19	0.35	11.37	3.75	12.63	118.0	200	0.35	19.40	0.65	0.62	0.66
To Haiku Street, Pipe 116A - 1160A								9.65	817				0.00		0.00		1.72			11.37									
			1.57				118	1.57	118				0.00		0.00		0.00		1.57	1.57									
	309A	310A	5.67				595	7.24	713	3.31	7.65		0.00		0.00		0.00	0.00	5.67	7.24	2.39	10.04	15.0	250	0.25	29.73	0.34	0.61	0.55
To Expansion Road, Pipe 310A - 1311A								7.24	713				0.00		0.00		0.00			7.24									
Drummond Future Road																													
	301A	302A	1.27				95	1.27	95	3.60	1.11		0.00		0.00		0.00	0.00	1.27	1.27	0.42	1.53	94.5	200	0.35	19.40	0.08	0.62	0.36
To Expansion Road, Pipe 302A - 1180A								1.27	95				0.00		0.00		0.00			1.27									
Drummond Future Road																													
			0.22				23	0.22	23				0.00		0.00	1.45	1.45		1.67	1.67									
	1303A	3031A	0.61				46	0.83	69	3.63	0.81		0.00		0.00		1.45	0.16	0.61	2.28	0.75	1.72	108.0	200	0.35	19.40	0.09	0.62	0.38
To Expansion Road, Pipe 3031A - 302A								0.83	69				0.00		0.00		1.45			2.28									

DESIGN PARAMETERS

Park Flow =	9300	L/ha/da	0.10764	l/s/Ha			
Average Daily Flow =	280	l/p/day			Industrial Peak Factor = as per MOE Graph		
Comm/Inst Flow =	28000	L/ha/da	0.3241	l/s/Ha	Extraneous Flow =	0.330	L/s/ha
Industrial Flow =	35000	L/ha/da	0.40509	l/s/Ha	Minimum Velocity =	0.600	m/s
Max Res. Peak Factor =	3.80				Manning's n = (Conc)	0.013	(Pvc) 0.013
Commercial/Inst./Park Peak Factor =	1.00				Townhouse coeff=	2.7	
Institutional =	0.32	l/s/Ha			Single house coeff=	3.4	

Designed: SLM

Checked: ADF

Dwg. Reference: Sanitary Drainage Plan, Dwgs. No. 80-83

PROJECT: **Ciavan Communities - Brazeau Phase 1**

LOCATION: **City of Ottawa**

File Ref: 18-1030

Date: **24 Apr 2020**

Sheet No. 2 of 6

SANITARY SEWER CALCULATION SHEET

Manning's n=0.013

LOCATION			RESIDENTIAL AREA AND POPULATION									COMM		INSTIT		PARK		C+I+I	INFILTRATION				PIPE						
STREET	FROM M.H.	TO M.H.	AREA (ha)	UNITS	UNITS Singles	UNITS Townhouse	POP.	CUMULATIVE AREA (ha)	CUMULATIVE POP.	PEAK FACT.	PEAK FLOW (l/s)	AREA (ha)	ACCU. AREA (ha)	AREA (ha)	ACCU. AREA (ha)	AREA (ha)	ACCU. AREA (ha)	PEAK FLOW (l/s)	TOTAL AREA (ha)	ACCU. AREA (ha)	INFILT. FLOW (l/s)	TOTAL FLOW (l/s)	DIST (m)	DIA (mm)	SLOPE (%)	CAP. (FULL) (l/s)	RATIO Q act/Q cap	VEL (FULL) (m/s)	VEL (ACT.) (m/s)
Expansion Road																													
			0.16				17	0.16	17				0.00		0.00		0.00		0.16	0.16									
	303A	3031A	0.19				14	0.35	31	3.68	0.37		0.00		0.00		0.00	0.00	0.19	0.35	0.12	0.49	65.0	200	0.65	26.44	0.02	0.84	0.32
Contribution From Drummond Future Road, Pipe 1303A - 3031A								0.83	69				0.00		0.00		1.45		2.28	2.63									
	3031A	302A	0.22				17	1.40	117	3.58	1.36		0.00		0.00		1.45	0.16	0.22	2.85	0.94	2.45	59.0	200	0.35	19.40	0.13	0.62	0.42
Contribution From Expansion Road, Pipe 301A - 302A								1.27	95				0.00		0.00		0.00		1.27	4.12									
	302A	1180A	0.20				15	2.87	227	3.50	2.58		0.00		0.00		1.45	0.16	0.20	4.32	1.43	4.16	51.0	200	0.35	19.40	0.21	0.62	0.49
	1180A	118A						2.87	227	3.50	2.58		0.00		0.00		1.45	0.16	0.00	4.32	1.43	4.16	10.5	200	0.35	19.40	0.21	0.62	0.49
To Haiku Street, Pipe 118A - 117A								2.87	227				0.00		0.00		1.45			4.32									
			0.19				20	0.19	20				0.00		0.00		0.00		0.19	0.19									
	303A	305A	0.21				16	0.40	36	3.67	0.43		0.00		0.00		0.00	0.00	0.21	0.40	0.13	0.56	69.5	200	2.45	51.34	0.01	1.63	0.52
Contribution From Drummond Future Road, Pipe 1305A - 305A								0.89	67				0.00		0.00		0.00		0.89	1.29									
			0.13				14	1.42	117				0.00		0.00		0.00		0.13	1.42									
	305A	306A	0.16				12	1.58	129	3.57	1.49		0.00		0.00		0.00	0.00	0.16	1.58	0.52	2.01	53.5	200	0.35	19.40	0.10	0.62	0.40
	306A	307A	0.13				10	1.71	139	3.56	1.60		0.00		0.00		0.00	0.00	0.13	1.71	0.56	2.17	10.5	200	0.35	19.40	0.11	0.62	0.41
	307A	308A	0.41				31	2.12	170	3.54	1.95		0.00		0.00		0.00	0.00	0.41	2.12	0.70	2.65	78.0	200	0.35	19.40	0.14	0.62	0.43
	308A	3033A	0.39				29	2.51	199	3.52	2.27		0.00		0.00		0.00	0.00	0.39	2.51	0.83	3.10	67.0	200	0.35	19.40	0.16	0.62	0.45
	3033A	310A	0.31				23	2.82	222	3.50	2.52		0.00		0.00		0.00	0.00	0.31	2.82	0.93	3.45	62.0	200	0.40	20.74	0.17	0.66	0.49
Contribution From Drummond Future Road, Pipe 309A - 310A								7.24	713.00				0.00		0.00		0.00		0.00	7.24									
			0.07				5	10.13	940				0.00		0.00		0.00		0.07	10.13									
	310A	1311A	1.22				128	11.35	1068	3.23	11.16		0.00		0.00		0.00	0.00	1.22	11.35	3.75	14.91	111.5	250	0.25	29.73	0.50	0.61	0.61
	1311A	1312A						11.35	1068	3.23	11.16		0.00		0.00		0.00	0.00	0.00	11.35	3.75	14.91	111.0	250	0.25	29.73	0.50	0.61	0.61
	1312A	1313A	4.04				424	15.39	1492	3.14	15.21		0.00		0.00		0.00	0.00	4.04	15.39	5.08	20.29	108.5	250	0.25	29.73	0.68	0.61	0.65
	1313A	405A						15.39	1492	3.14	15.21		0.00		0.00		0.00	0.00	0.00	15.39	5.08	20.29	89.0	250	0.25	29.73	0.68	0.61	0.65
To Future Greenbank Road, Pipe 405A - 406A								15.39	1492				0.00		0.00		0.00			15.39									
Drummond Commercial																													
	1321A	3211A						0.00				7.40	7.40		0.00		0.00	2.40	7.40	7.40	2.44	4.84	11.0	200	0.50	23.19	0.21	0.74	0.58
To Haiku Street, Pipe 3211A - 133A								0.00	0				7.40		0.00		0.00			7.40									
Brazeau Commercial																													
	Ctrl 1A	132A						0.00				13.83	13.83		0.00		0.00	4.48	13.83	13.83	4.56	9.05	15.5	200	0.35	19.40	0.47	0.62	0.60
To Haiku Street, Pipe 132A - 3211A								0.00	0				13.83		0.00		0.00			13.83									
Haiku Street																													
Contribution From Brazeau Commercial, Pipe 1A - 132A								0.00	0				13.83		0.00		0.00		13.83	13.83									
	132A	3211A	0.69				0	0.69	0				13.83		0.00		0.00	4.48	0.69	14.52	4.79	9.27	63.5	200	0.35	19.40	0.48	0.62	0.61
Contribution From Drummond Commercial, Pipe 1321A - 3211A								0.00	0				7.40		0.00		0.00		7.40	21.92									
	3211A	133A						0.69	0				21.23		0.00		0.00	6.88	0.00	21.92	7.23	14.11	9.5	200	0.35	19.40	0.73	0.62	0.67
	133A	134A	0.16				0	0.85	0				21.23		0.00		0.00	6.88	0.16	22.08	7.29	14.17	61.5	200	0.35	19.40	0.73	0.62	0.67
	134A	135A	0.06				0	0.91	0				21.23		0.00		0.00	6.88	0.06	22.14	7.31	14.19	39.5	200	0.35	19.40	0.73	0.62	0.67
To Haiku Street, Pipe 135A - 118A								0.91	0				21.23		0.00		0.00			22.14									
Montology Way																													
	1260A	127A	0.24	3	3		11	0.24	11	3.73	0.13		0.00		0.00		0.00	0.00	0.24	0.24	0.08	0.21	37.5	200	0.65	26.44	0.01	0.84	0.24
	127A	128A	0.13	2	2		7	0.37	18	3.71	0.22		0.00		0.00		0.00	0.00	0.13	0.37	0.12	0.34	12.5	200	0.35	19.40	0.02	0.62	0.23
	128A	129A	0.48	12	12		41	0.85	59	3.64	0.70		0.00		0.00		0.00	0.00	0.48	0.85	0.28	0.98	76.5	200	0.35	19.40	0.05	0.62	0.32
	129A	130A	0.60	17	17		58	1.45	117	3.58	1.36		0.00		0.00		0.00	0.00	0.60	1.45	0.48	1.84	102.0	200	0.35	19.40	0.09	0.62	0.39
	130A	131A						1.45	117	3.58	1.36		0.00		0.00		0.00	0.00	0.00	1.45	0.48	1.84	7.5	200	0.35	19.40	0.09	0.62	0.39
To Montology Way, Pipe 131A - 135A								1.45	117				0.00		0.00		0.00			1.45									
Rugosa Street																													
	211A	204A	0.49	12	12		41	0.49	41	3.67	0.49		0.00		0.00		0.00	0.00	0.49	0.49	0.16	0.65	89.0	200	0.80	29.34	0.02	0.93	0.37

DESIGN PARAMETERS

Park Flow =	9300	L/ha/da	0.10764	l/s/Ha		
Average Daily Flow =	280	l/p/day			Industrial Peak Factor = as per MOE Graph	
Comm/Inst Flow =	28000	L/ha/da	0.3241	l/s/Ha	Extraneous Flow =	0.330 L/s/ha
Industrial Flow =	35000	L/ha/da	0.40509	l/s/Ha	Minimum Velocity =	0.600 m/s
Max Res. Peak Factor =	3.80				Manning's n = (Conc)	0.013 (Pvc) 0.013
Commercial/Inst./Park Peak Factor =	1.00				Townhouse coeff=	2.7
Institutional =	0.32	l/s/Ha			Single house coeff=	3.4

Designed: SLM

Checked: ADF

Dwg. Reference: Sanitary Drainage Plan, Dwgs. No. 80-83

PROJECT: **Ciavan Communities - Brazeau Phase 1**

LOCATION: **City of Ottawa**

File Ref: 18-1030

Date: **24 Apr 2020**

Sheet No. 3 of 6

1020_SAN_slm.xlsx

SANITARY SEWER CALCULATION SHEET

Manning's n=0.013

LOCATION			RESIDENTIAL AREA AND POPULATION									COMM		INSTIT		PARK	C+I+I	INFILTRATION				PIPE						
STREET	FROM M.H.	TO M.H.	AREA (ha)	UNITS	UNITS Singles	UNITS Townhouse	POP.	CUMULATIVE AREA (ha)	CUMULATIVE POP.	PEAK FACT.	PEAK FLOW (l/s)	AREA (ha)	ACCU. AREA (ha)	AREA (ha)	ACCU. AREA (ha)	AREA (ha)	ACCU. AREA (ha)	PEAK FLOW (l/s)	TOTAL AREA (ha)	ACCU. AREA (ha)	INFILT. FLOW (l/s)	TOTAL FLOW (l/s)	DIST (m)	DIA (mm)	SLOPE (%)	CAP. (FULL) (l/s)	RATIO Q act/Q cap	VEL (FULL) (m/s)	VEL (ACT.) (m/s)
	204A	205A	0.74	19	19		65	1.23	106	3.59	1.23		0.00		0.00		0.00	0.00	0.74	1.23	0.41	1.64	120.0	200	0.35	19.40	0.08	0.62	0.37
	205A	206A						1.23	106	3.59	1.23		0.00		0.00		0.00	0.00	0.00	1.23	0.41	1.64	13.5	200	0.35	19.40	0.08	0.62	0.37
To Appalachian Circle, Pipe 206A - 207A								1.23	106				0.00		0.00		0.00			1.23									
Appalachian Circle																													
	209A	210A	0.08	1	1		4	0.08	4	3.76	0.05		0.00		0.00		0.00	0.00	0.08	0.08	0.03	0.08	12.5	200	2.95	56.33	0.00	1.79	0.29
	210A	211A	0.20	4	4		14	0.28	18	3.71	0.22		0.00		0.00		0.00	0.00	0.20	0.28	0.09	0.31	50.5	200	3.80	63.94	0.00	2.04	0.52
	211A	212A	0.19	4	4		14	0.47	32	3.68	0.38		0.00		0.00		0.00	0.00	0.19	0.47	0.16	0.54	50.0	200	0.45	22.00	0.02	0.70	0.29
	212A	213A	0.09	1	1		4	0.56	36	3.67	0.43		0.00		0.00		0.00	0.00	0.09	0.56	0.18	0.61	12.5	200	1.55	40.83	0.02	1.30	0.47
	213A	214A	0.53	14	14		48	1.09	84	3.61	0.98		0.00		0.00		0.00	0.00	0.53	1.09	0.36	1.34	86.5	200	2.35	50.28	0.03	1.60	0.68
To Foundation Lane, Pipe 214A - 119A								1.09	84				0.00		0.00		0.00			1.09									
	209A	201A	0.58	18	18		62	0.58	62	3.64	0.73		0.00		0.00		0.00	0.00	0.58	0.58	0.19	0.92	93.5	200	0.65	26.44	0.03	0.84	0.39
	201A	202A	0.69	22	22		75	1.27	137	3.56	1.58		0.00		0.00		0.00	0.00	0.69	1.27	0.42	2.00	116.5	200	0.95	31.97	0.06	1.02	0.56
	202A	203A	0.18	3	3		11	1.45	148	3.55	1.70		0.00		0.00		0.00	0.00	0.18	1.45	0.48	2.18	13.5	200	0.80	29.34	0.07	0.93	0.54
	203A	206A	0.17	4	4		14	1.62	162	3.54	1.86		0.00		0.00		0.00	0.00	0.17	1.62	0.53	2.40	50.5	200	1.10	34.40	0.07	1.09	0.62
Contribution From Rugosa Street, Pipe 205A - 206A								1.23	106				0.00		0.00		0.00		1.23	2.85									
	206A	207A	0.20	5	5		17	3.05	285	3.47	3.21		0.00		0.00		0.00	0.00	0.20	3.05	1.01	4.21	50.5	200	0.35	19.40	0.22	0.62	0.49
	207A	208A	0.12	2	2		7	3.17	292	3.47	3.28		0.00		0.00		0.00	0.00	0.12	3.17	1.05	4.33	12.0	200	0.35	19.40	0.22	0.62	0.50
	208A	214A	0.65	18	18		62	3.82	354	3.44	3.94		0.00		0.00		0.00	0.00	0.65	3.82	1.26	5.20	112.5	200	1.90	45.21	0.12	1.44	0.95
To Unknown Road1 - 07, Pipe 214A - 119A								3.82	354				0.00		0.00		0.00			3.82									
Foundation Lane																													
Contribution From Appalachian Circle, Pipe 208A - 214A								3.82	354				0.00		0.00		0.00		3.82	3.82									
Contribution From Appalachian Circle, Pipe 213A - 214A								1.09	84				0.00		0.00		0.00		1.09	4.91									
	214A	119A	0.08				0	4.99	438	3.40	4.83		0.00		0.00		0.00	0.00	0.08	4.99	1.65	6.48	59.0	200	0.35	19.40	0.33	0.62	0.55
To Montology Way, Pipe 119A - 120A								4.99	438				0.00		0.00		0.00			4.99									
Travertine Way																													
	119A	122A	0.52	13	13		45	0.52	45	3.66	0.53		0.00		0.00		0.00	0.00	0.52	0.52	0.17	0.71	86.5	200	0.65	26.44	0.03	0.84	0.36
	122A	123A	0.09	1	1		4	0.61	49	3.65	0.58		0.00		0.00		0.00	0.00	0.09	0.61	0.20	0.78	12.5	200	1.50	40.17	0.02	1.28	0.50
	123A	126A	0.20	4	4		14	0.81	63	3.63	0.74		0.00		0.00		0.00	0.00	0.20	0.81	0.27	1.01	50.0	200	3.20	58.67	0.02	1.87	0.70
To Sturnidae Street, Pipe 126A - 106A								0.81	63				0.00		0.00		0.00			0.81									
Contribution From Foundation Lane, Pipe 214A - 119A								4.99	438				0.00		0.00		0.00		4.99	4.99									
	119A	120A	0.60	17	17		58	5.59	496	3.38	5.43		0.00		0.00		0.00	0.00	0.60	5.59	1.84	7.28	103.5	200	0.35	19.40	0.38	0.62	0.57
	120A	121A	0.14	2	2		7	5.73	503	3.38	5.51		0.00		0.00		0.00	0.00	0.14	5.73	1.89	7.40	13.5	200	0.35	19.40	0.38	0.62	0.57
	121A	131A	0.43	10	10		34	6.16	537	3.37	5.86		0.00		0.00		0.00	0.00	0.43	6.16	2.03	7.89	110.0	200	0.90	31.12	0.25	0.99	0.82
Contribution From Montology Way, Pipe 130A - 131A								1.45	117				0.00		0.00		0.00		1.45	7.61									
	131A	135A	0.19	4	4		14	7.80	668	3.32	7.20		0.00		0.00		0.00	0.00	0.19	7.80	2.57	9.77	58.5	200	0.35	19.40	0.50	0.62	0.62
To Haiku Street, Pipe 135A - 118A								7.80	668				0.00		0.00		0.00			7.80									
Haiku Street																													
Contribution From Montology Way, Pipe 131A - 135A								7.80	668				0.00		0.00		0.00		7.80	7.80									
Contribution From Haiku Street, Pipe 134A - 135A								0.91	0				21.23		0.00		0.00		22.14	29.94									
	135A	118A						8.71	668	3.32	7.20		21.23		0.00		0.00	6.88	0.00	29.94	9.88	23.96	6.5	250	0.25	29.73	0.81	0.61	0.67
Contribution From Expansion Road, Pipe 1180A - 118A								2.87	227				0.00		0.00		1.45		4.32	34.26									
	118A	117A	0.70	19	19		65	12.28	960	3.25	10.11		21.23		0.00		1.45	7.04	0.70	34.96	11.54	28.68	119.0	300	0.20	43.25	0.66	0.61	0.65
	117A	116A	0.67	15	15		51	12.95	1011	3.24	10.61		21.23		0.00		1.45	7.04	0.67	35.63	11.76	29.40	125.5	375	0.15	67.91	0.43	0.61	0.59

DESIGN PARAMETERS

Park Flow =	9300	L/ha/da	0.10764	l/s/Ha			
Average Daily Flow =	280	l/p/day			Industrial Peak Factor = as per MOE Graph		
Comm/Inst Flow =	28000	L/ha/da	0.3241	l/s/Ha	Extraneous Flow =	0.330	L/s/ha
Industrial Flow =	35000	L/ha/da	0.40509	l/s/Ha	Minimum Velocity =	0.600	m/s
Max Res. Peak Factor =	3.80				Manning's n = (Conc)	0.013 (Pvc)	0.013
Commercial/Inst./Park Peak Factor =	1.00				Townhouse coeff=	2.7	
Institutional =	0.32	l/s/Ha			Single house coeff=	3.4	

Designed: SLM	PROJECT: **Ciavan Communities - Brazeau Phase 1**		
Checked: ADF	LOCATION: **City of Ottawa**		
Dwg. Reference: Sanitary Drainage Plan, Dwgs. No. 80-83	File Ref: 18-1030	Date: **24 Apr 2020**	Sheet No. 4 of 6

SANITARY SEWER CALCULATION SHEET

Manning's n=0.013

LOCATION			RESIDENTIAL AREA AND POPULATION									COMM		INSTIT		PARK		C+I+I	INFILTRATION				PIPE						
STREET	FROM M.H.	TO M.H.	AREA (ha)	UNITS	UNITS Singles	UNITS Townhouse	POP.	CUMULATIVE AREA (ha)	CUMULATIVE POP.	PEAK FACT.	PEAK FLOW (l/s)	AREA (ha)	ACCU. AREA (ha)	AREA (ha)	ACCU. AREA (ha)	AREA (ha)	ACCU. AREA (ha)	PEAK FLOW (l/s)	TOTAL AREA (ha)	ACCU. AREA (ha)	INFILT. FLOW (l/s)	TOTAL FLOW (l/s)	DIST (m)	DIA (mm)	SLOPE (%)	CAP. (FULL) (l/s)	RATIO Q act/Q cap	VEL (FULL) (m/s)	VEL (ACT.) (m/s)
Contribution From Elevation Road, Pipe 106A - 116A								9.65	817				0.00		0.00		1.72		11.37	47.00									
	116A	1160A						22.60	1828	3.09	18.32		21.23		0.00		3.17	7.22	0.00	47.00	15.51	41.05	17.0	375	0.15	67.91	0.60	0.61	0.64
To Haiku Street, Pipe 1160A - 1150A								22.60	1828				21.23		0.00		3.17			47.00									
Haiku Street - Local Sewer																													
	109A	1100A	0.20	6		6	17	0.20	17	3.71	0.20		0.00		0.00		0.00	0.00	0.20	0.20	0.07	0.27	55.0	200	1.00	32.80	0.01	1.04	0.30
To Haiku Street, Pipe 1100A - 109A								0.20	17				0.00		0.00		0.00			0.20									
	1150A	1160A	0.24	6		6	17	0.24	17	3.71	0.20		0.00		0.00		0.00	0.00	0.24	0.24	0.08	0.28	41.5	200	0.65	26.44	0.01	0.84	0.27
To Haiku Street, Pipe 1160A - 115A								0.24	17				0.00		0.00		0.00			0.24									
	110A	111A	0.41	16		16	44	0.41	44	3.66	0.52		0.00		0.00		0.00	0.00	0.41	0.41	0.14	0.66	74.5	200	0.65	26.44	0.02	0.84	0.35
To Haiku Street, Pipe 111A - 110A								0.41	44				0.00		0.00		0.00			0.41									
	111A	115A	0.49	19		19	52	0.49	52	3.65	0.61		0.00		0.00		0.00	0.00	0.49	0.49	0.16	0.78	87.5	200	0.65	26.44	0.03	0.84	0.37
To Haiku Street, Pipe 115A - 111A								0.49	52				0.00		0.00		0.00			0.49									
Haiku Street																													
Contribution From Haiku Street, Pipe 116A - 1160A								22.60	1828				21.23		0.00		3.17		47.00	47.00									
Contribution From Haiku Street - Local Sewer, Pipe 1150A - 1160A								0.24	17.00				0.00		0.00		0.00		0.00	0.24									
	1160A	1150A						22.84	1845	3.09	18.48		21.23		0.00		3.17	7.22	0.00	47.24	15.59	41.29	41.5	375	0.15	67.91	0.61	0.61	0.64
	1150A	115A						22.84	1845	3.09	18.48		21.23		0.00		3.17	7.22	0.00	47.24	15.59	41.29	4.5	375	0.15	67.91	0.61	0.61	0.64
Contribution From Focality Crescent, Pipe 114A - 115A								1.18	116				0.00		0.00		0.00		1.18	48.42									
Contribution From Haiku Street - Local Sewer, Pipe 111A - 115A								0.49	52.00				0.00		0.00		0.00		0.00	0.49									
	115A	111A						24.51	2013	3.07	20.01		21.23		0.00		3.17	7.22	0.00	48.91	16.14	43.37	87.5	375	0.15	67.91	0.64	0.61	0.65
Contribution From Haiku Street - Local Sewer, Pipe 110A - 111A								0.41	44.00				0.00		0.00		0.00		0.00	0.41									
	111A	110A						24.92	2057	3.06	20.41		21.23		0.00		3.17	7.22	0.00	49.32	16.28	43.90	74.5	375	0.15	67.91	0.65	0.61	0.65
Contribution From Focality Crescent, Pipe 108A - 110A								0.31	23				0.00		0.00		0.00		0.31	49.63									
	110A	1100A						25.23	2080	3.06	20.61		21.23		0.00		3.17	7.22	0.00	49.63	16.38	44.21	4.5	375	0.15	67.91	0.65	0.61	0.65
Contribution From Haiku Street - Local Sewer, Pipe 109A - 1100A								0.20	17.00				0.00		0.00		0.00		0.00	0.20									
	1100A	109A						25.43	2097	3.06	20.77		21.23		0.00		3.17	7.22	0.00	49.83	16.44	44.43	55.0	375	0.15	67.91	0.65	0.61	0.65
To Obsidian Street, Pipe 109A - 400A								25.43	2097				21.23		0.00		3.17			49.83									
Future Commercial																													
	2A	2250A						0.00				2.68	2.68		0.00		0.00	0.87	2.68	2.68	0.88	1.75	11.0	200	0.35	19.40	0.09	0.62	0.38
To Obsidian Street, Pipe 2250A - 226A								0.00	0				2.68		0.00		0.00			2.68									
Obsidian Street																													
	224A	225A	0.33	9		9	25	0.33	25	3.69	0.30		0.00		0.00		0.00	0.00	0.33	0.33	0.11	0.41	75.0	200	0.65	26.44	0.02	0.84	0.30
	225A	2250A	0.27	8		8	22	0.60	47	3.66	0.56		0.00		0.00		0.00	0.00	0.27	0.60	0.20	0.75	67.5	200	0.90	31.12	0.02	0.99	0.41
Contribution From Future Commercial, Pipe 2A - 2250A								0.00	0				2.68		0.00		0.00		2.68	3.28									
	2250A	226A	0.15	3		3	9	0.75	56	3.64	0.66		2.68		0.00		0.00	0.87	0.15	3.43	1.13	2.66	46.0	200	1.40	38.81	0.07	1.24	0.70
	226A	109A	0.34	9		9	25	1.09	81	3.61	0.95		2.68		0.00		0.00	0.87	0.34	3.77	1.24	3.06	92.0	200	1.60	41.49	0.07	1.32	0.76
Contribution From Haiku Street, Pipe 1100A - 109A								25.43	2097				21.23		0.00		3.17		49.83	53.60									
Contribution From Future Residential, Pipe 3A - 109A								1.90	162				0.00		0.00		0.00		1.90	55.50									
	109A	400A	0.09				0	28.51	2340	3.03	22.94		23.91		0.00		3.17	8.09	0.09	55.59	18.34	49.38	63.0	375	0.15	67.91	0.73	0.61	0.67
To Drummond Future Road , Pipe 400A - 401A								28.51	2340				23.91		0.00		3.17			55.59									

DESIGN PARAMETERS

Park Flow =	9300	L/ha/da	0.10764	l/s/Ha		
Average Daily Flow =	280	l/p/day			Industrial Peak Factor = as per MOE Graph	
Comm/Inst Flow =	28000	L/ha/da	0.3241	l/s/Ha	Extraneous Flow =	0.330 L/s/ha
Industrial Flow =	35000	L/ha/da	0.40509	l/s/Ha	Minimum Velocity =	0.600 m/s
Max Res. Peak Factor =	3.80				Manning's n = (Conc)	0.013 (Pvc) 0.013
Commercial/Inst./Park Peak Factor =	1.00				Townhouse coeff=	2.7
Institutional =	0.32	l/s/Ha			Single house coeff=	3.4

Designed: SLM	PROJECT: **Ciavan Communities - Brazeau Phase 1**		
Checked: ADF	LOCATION: **City of Ottawa**		
Dwg. Reference: Sanitary Drainage Plan, Dwgs. No. 80-83	File Ref: 18-1030	Date: **24 Apr 2020**	Sheet No. 5 of 6

SANITARY SEWER CALCULATION SHEET

Manning's n=0.013

LOCATION			RESIDENTIAL AREA AND POPULATION									COMM		INSTIT		PARK		C+I+I	INFILTRATION				PIPE						
STREET	FROM M.H.	TO M.H.	AREA (ha)	UNITS	UNITS Singles	UNITS Townhouse	POP.	CUMULATIVE AREA (ha)	CUMULATIVE POP.	PEAK FACT.	PEAK FLOW (l/s)	AREA (ha)	ACCU. AREA (ha)	AREA (ha)	ACCU. AREA (ha)	AREA (ha)	ACCU. AREA (ha)	PEAK FLOW (l/s)	TOTAL AREA (ha)	ACCU. AREA (ha)	INFILT. FLOW (l/s)	TOTAL FLOW (l/s)	DIST (m)	DIA (mm)	SLOPE (%)	CAP. (FULL) (l/s)	RATIO Q act/Q cap	VEL (FULL) (m/s)	VEL (ACT.) (m/s)
Drummond Future Road																													
Contribution From Obsidian Street, Pipe 109A - 400A								28.51	2340				23.91		0.00		3.17		55.59	55.59									
	400A	401A	0.24				25	28.75	2365	3.02	23.17		23.91		0.00		3.17	8.09	0.24	55.83	18.42	49.68	72.5	375	0.15	67.91	0.73	0.61	0.67
	401A	402A	0.14				15	28.89	2380	3.02	23.30		23.91		0.00		3.17	8.09	0.14	55.97	18.47	49.86	62.0	375	0.15	67.91	0.73	0.61	0.67
To future Greenbank Road, Pipe 402A - 403A								28.89	2380				23.91		0.00		3.17			55.97									
Future Greenbank Road																													
Contribution From Drummond Future Road, Pipe 401A - 402A								28.89	2380				23.91		0.00		3.17		55.97	55.97									
	402A	403A	0.38				0	29.27	2380	3.02	23.30		23.91		0.00		3.17	8.09	0.38	56.35	18.60	49.98	80.0	375	0.15	67.91	0.74	0.61	0.67
	403A	404A	0.33				0	29.60	2380	3.02	23.30		23.91		0.00		3.17	8.09	0.33	56.68	18.70	50.09	80.0	375	0.15	67.91	0.74	0.61	0.67
	404A	405A	0.33				0	29.93	2380	3.02	23.30		23.91		0.00		3.17	8.09	0.33	57.01	18.81	50.20	81.0	375	0.15	67.91	0.74	0.61	0.67
Contribution From Expansion Road, Pipe 1313A - 405A							0	15.39	1492				0.00		0.00		0.00		0.00	15.39									
	405A	406A	0.25				0	45.57	3872	2.88	36.10		23.91		0.00		3.17	8.09	0.25	72.65	23.97	68.16	59.5	375	0.25	87.67	0.78	0.79	0.88
	406A	407A	0.35				0	45.92	3872	2.88	36.10	6.06	23.91		6.06		3.17	10.05	6.41	79.06	26.09	72.24	83.5	375	0.30	96.03	0.75	0.87	0.95
	407A	408A	0.46				0	46.38	3872	2.88	36.10		23.91		6.06		3.17	10.05	0.46	79.52	26.24	72.39	110.0	375	0.30	96.03	0.75	0.87	0.95
	408A	409A	0.40				0	46.78	3872	2.88	36.10		23.91		6.06		3.17	10.05	0.40	79.92	26.37	72.53	96.5	375	0.30	96.03	0.76	0.87	0.95
	409A	410A	0.51				0	47.29	3872	2.88	36.10		23.91		6.06		3.17	10.05	0.51	80.43	26.54	72.69	120.0	375	0.30	96.03	0.76	0.87	0.96
	410A	570A	0.30				0	47.59	3872	2.88	36.10		23.91		6.06		3.17	10.05	0.30	80.73	26.64	72.79	63.0	375	0.30	96.03	0.76	0.87	0.96
	570A	57A						47.59	3872	2.88	36.10		23.91		6.06		3.17	10.05	0.00	80.73	26.64	72.79	15.0	375	0.50	123.98	0.59	1.12	1.17

DESIGN PARAMETERS

Park Flow =	9300	L/ha/da	0.10764	l/s/Ha				
Average Daily Flow =	280	l/p/day			Industrial Peak Factor = as per MOE Graph			
Comm/Inst Flow =	28000	L/ha/da	0.3241	l/s/Ha	Extraneous Flow =	0.330	L/s/ha	
Industrial Flow =	35000	L/ha/da	0.40509	l/s/Ha	Minimum Velocity =	0.600	m/s	
Max Res. Peak Factor =	3.80				Manning's n = (Conc)	0.013	(Pvc)	0.013
Commercial/Inst./Park Peak Factor =	1.00				Townhouse coeff=	2.7		
Institutional =	0.32	l/s/Ha			Single house coeff=	3.4		

Designed: SLM

Checked: ADF

Dwg. Reference: Sanitary Drainage Plan, Dwgs. No. 80-83

PROJECT: **Ciavan Communities - Brazeau Phase 1**

LOCATION: **City of Ottawa**

File Ref: 18-1030

Date: **24 Apr 2020**

Sheet No. 6 of 6

APPENDIX D

STORM

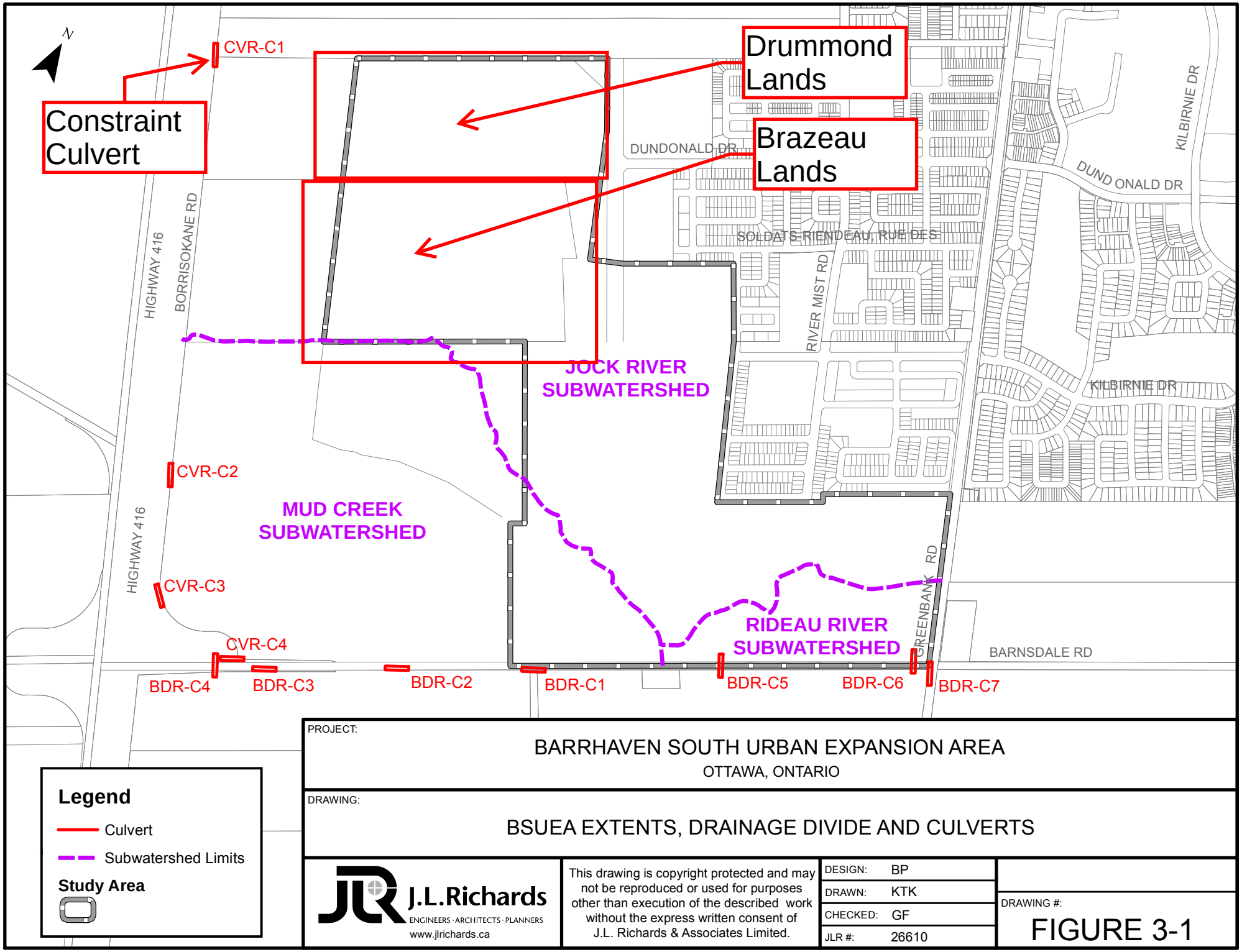

Legend

- Culvert
- Subwatershed Limits

Study Area

PROJECT:

BARRHAVEN SOUTH URBAN EXPANSION AREA
OTTAWA, ONTARIO

DRAWING:

BSUEA EXTENTS, DRAINAGE DIVIDE AND CULVERTS

J.L.Richards
ENGINEERS · ARCHITECTS · PLANNERS
www.jlrichards.ca

This drawing is copyright protected and may not be reproduced or used for purposes other than execution of the described work without the express written consent of J.L. Richards & Associates Limited.

DESIGN:	BP
DRAWN:	KTK
CHECKED:	GF
JLR #:	26610

DRAWING #:

FIGURE 3-1

File Location: R:\26000\26610 - Barrhaven Expansion - Minto Brazeau Mattamy\JLR DWG\GIS\26610 C BSUEA EXTENTS.mxd

Plot Date: September 12, 2017 8:45:23 AM

Table 5-1: Inventory of Model Boundary Water Crossings

Culvert ID	Location	Type	Size (mm)
CR-C1	On Cambrian Road, 910 m east of Borrisokane Road, carries Clarke West Municipal Drain	Circ. CSP	1650
CR-C2	On Cambrian Road at Borrisokane Road	Circ. CSP	N/A
BDR-C4	On Barnsdale Road, 50 m west of Borrisokane Road	Circ. CSP	1200
BDR-C5	On Barnsdale Road, 500 m west of the existing Greenbank Road	Circ. CSP	500
BDR-C6	On Barnsdale Road, 60 m west of the existing Greenbank Road	Circ. CSP	400

It should be noted that culvert CR-C2 was not included as part of the topographical survey and size is currently unknown.

The 2014 Barrhaven South Master Servicing Study Draft Addendum (Draft 2014 BSMSSA) prepared by Stantec, notes that water crossing CR-C1 is to be replaced with storm sewers when the Clarke West Municipal Drain is enclosed as part of the adjacent development and the Clarke Stormwater Management Facility is constructed. The Draft 2014 BSMSSA also indicated that culvert CR-C2 is to be maintained, and will accommodate flows from the existing catchment area south of Cambrian Road up to the 1:100 year event. Should future development occur south of the woodlot draining to CR-C2, grading and servicing from the future development area in the vicinity of the woodlot should be developed to maximize overland sheet flow drainage (not channelized) towards the woodlot.

Table 5-2: Inventory of Model Water Crossings (Internal)

Culvert ID	Location	Type	Size (mm)
CVR-C1	East of Borrisokane Road along the north corner of the BSUEA	Circ. CSP	500
CVR-C2	East of Borrisokane Road at Field Entrance	Circ. CSP	450
CVR-C3	East of Borrisokane Road at Field Entrance	Circ. CSP	400
CVR-C4	Borrisokane Road Crossing north of Barnsdale Road	Circ. CSP	1200
BDR-C1	Viewbank Road Crossing	Circ. CSP	400
BDR-C2	Field Entrance Crossing South of Barnsdale Road	Circ. CSP	400
BDR-C3	Field Entrance Crossing South of Barnsdale Road	Circ. CSP	500
BDR-C7	Barnsdale Road Crossing close to the existing Greenbank Road Intersection	Circ. CSP	500

Table 5-2, above, summarizes the various culvert crossings within the BSUEA. As shown above, all the culverts are 500 mm in diameter or less with the exception of CVR-C4, which is 1200 mm in diameter.

B5.5.1 Storm Distribution

The hydrological response of the BSUEA and abutting lands was simulated under a 6 hour, 12 hour and 24 hour SCS Type II storm distribution. The SCS Type II storm distribution was developed by the American Soil Conservation Service and is generally used for estimating flows in rural areas. The critical storm event under pre-development conditions, with the highest peak runoff, was found to occur under the 12 hour SCS Type II storm distribution.

B5.6 Modeling Results

The pre-development SWMHYMO simulation results, predicting flows at each of the culverts for the critical storm event, are shown in Table 5-5, below. The estimated capacity and level of service of each culvert is also provided. The details of culvert CR-C2, crossing Cambrian Road at Borrisokane Road, could not be obtained in the field due to obstructions and/or structural failure. Hence, the capacity and level of service at this culvert could not be confirmed.

Table 5-5: Hydrological Simulation Results at Culvert Locations (12 hour SCS Type II storm)

Culvert ID	Flow (m^3/s) at culvert location for return period (recurrence)						Estimated Culvert Capacity (m^3/s)	Estimated Level of Service (years)
	1:2 yr	1:5 yr	1:10 yr	1:25 yr	1:50 yr	1:100 yr		
CR-C1	0.3	0.7	1.0	1.6	2.0	2.5	5.5	1:100
CR-C2	0.2	0.4	0.7	1.0	1.3	1.6	N/A	N/A
CVR-C1	0.1	0.3	0.5	0.8	1.0	1.3	0.4	1:5
CVR-C2	0.0	0.1	0.1	0.2	0.2	0.3	0.2	1:25
CVR-C3	0.0	0.1	0.2	0.2	0.3	0.4	0.3	1:50
CVR-C4	0.2	0.4	0.6	0.9	1.1	1.4	2.6	1:100
BDR-C1	0.0	0.0	0.1	0.1	0.1	0.2	0.2	1:100
BDR-C2	0.0	0.1	0.1	0.1	0.2	0.2	0.2	1:50
BDR-C3	0.1	0.1	0.1	0.2	0.2	0.3	0.5	1:100
BDR-C4	0.2	0.4	0.6	0.9	1.2	1.5	2.6	1:100
BDR-C5	0.0	0.0	0.0	0.0	0.0	0.1	0.3	1:100
BDR-C6	0.0	0.0	0.1	0.1	0.2	0.2	0.2	1:100
BDR-C7	0.1	0.1	0.1	0.2	0.3	0.4	0.3	1:50
Total Flow to Thomas Baxter Municipal Drain	0.2	0.5	0.7	1.1	1.3	1.6	N/A	N/A

OUTLET TRUNK STORM SEWER TO JOCK RIVER
DISTANCE FROM MH205 TO JOCK RIVER 1:100 YR FLOOD PLAIN LIMIT IS APPROXIMATELY 815 M
INVERT AT MH205 = 93.42 M
INVERT AT JOCK RIVER 100 YR FLOOD PLAIN = APPROXIMATELY 92.0 M
OUTLET SEWER = 825 MM DIA. @ 0.17 %

CAMBRIAN RD
TO CLARK POND
TODD POND
OUTLET
FUTURE COLLECTOR RD
BORRISOKANE RD
HIGHWAY 416
TRAIL RD
RIVER MIST RD
EX GREENBANK RD
DUNDONALD DR
DES SOLDATS
RIENDEAU ST
FAMEFLOWER ST
KILBIRNIE DR
LAURALEAF CR.
BREAKSTONE RD
KNOCKADERRY CR.
ALEX PATTERSON AVE
NEW GREENBANK RD
BARNSDALE RD
DRUMMOND SWM POND
DRUMMOND AGGREGATE EXTRACTION AREA
BRAZEAU SWM POND
BRAZEAU AGGREGATE EXTRACTION AREA
SWM DRY POND
DRY SWM POND
PARK & RIDE
FRENCH PUBLIC ELEMENTARY SCHOOL
FRENCH CATHOLIC ELEMENTARY SCHOOL
NEIGHBOURHOOD PARK
COMMERCIAL
MEDIUM DENSITY
PARKETTE 1
PARKETTE 2
STREET 1
STREET 2
STREET 3
STREET 4
STREET 5
STREET 6
EAST WEST COLLECTOR
POND 1 (NORTH)
POND 2 (SOUTH)
SOUTH POND
710 HDS
825 HDS
SCHOOL
PARK

LEGEND

- PROPOSED STORM (EES SYSTEM), PER 2018 BSUEA MSS
- PROPOSED STORM (CONVENTIONAL), PER 2018 BSUEA MSS
- FUTURE STORM, PER 2014 BS MSS
- EXISTING STORM
- DRAINAGE BOUNDARY
- LIMIT OF STUDY AREA FOR BSUEA
- 710 HDS — HYDROLOGY DYNAMIC SEPARATOR
- AREA IN HECTARES* / RUNOFF COEFFICIENT* (5.48 | 0.64 | 318 - 364)
- PIPE REACH UPSTREAM MAINTENANCE HOLE TO DOWNSTREAM MAINTENANCE HOLE

* IF RED, AREAS DESIGNATED AS COMMERCIAL, SCHOOLS OR PARKS

NOTE:

ROADWAYS WITHIN A DRAINAGE AREA WHICH IS TRIBUTARY TO AN EES SEWER, ARE TO BE DESIGNED WITH EES SEWERS. CONVERSELY, ROADWAYS WITHIN A DRAINAGE AREA WHICH IS TRIBUTARY TO A CONVENTIONAL SEWER, ARE TO BE DESIGNED WITH CONVENTIONAL SEWERS.

No.	ISSUE / REVISION	DD/MM/YY
4	ISSUED FOR PLANNING COMMITTEE APPROVAL	04/05/18
3	ADDRESS COMMENTS, RE-ISSUE BSUEA MSS 2ND SUBMISSION	26/02/18
2	ISSUED AS PART OF DRAFT MSS	20/09/17
1	ISSUED FOR PRE-TAC WORKING MEETING	31/08/17

This drawing is copyright protected and may not be reproduced or used for purposes other than execution of the described work without the express written consent of J.L. Richards & Associates Limited.

VERIFY SHEET SIZE AND SCALES. BAR TO THE RIGHT IS 25mm IF THIS IS A FULL SIZE DRAWING. 0 25mm

SCALE: 1:4000

CLIENT:

CONSULTANT: www.jlrichards.ca

J.L.Richards ENGINEERS · ARCHITECTS · PLANNERS

CONSULTANT:

PROFESSIONAL STAMP: LICENSED PROFESSIONAL ENGINEER M. N. L. DALRYMPLE PROVINCE OF ONTARIO May 4/18

PROJECT NORTH

PROJECT:

BARRHAVEN SOUTH URBAN EXPANSION AREA (BSUEA)

-

DRAWING:

MASTER STORM DRAINAGE PLAN EES

DESIGN: JW
DRAWN: CJM
CHECKED: LD
JLR #: 26610

DRAWING #: MST-2

PLOT DATE: May 4, 2018 8:44:19 AM

File Location: n:\26000\26610 - barrhaven expansion - minto brazeau nattamy\JLR DWG\civil\26610 C-MST-2.dwg

ETOBICOKE EXFILTRATION SYSTEM STORM SEWERS

Maintenance Hole Number		SEWER DATA			Upstream	Downstream
		Dia	Slope	Length	Obvert	Obvert
FROM	TO	(mm)	(%)	(m)		
DI-1	170	900	1.05	56.1	107.04	106.45
170	172	900	1.05	186.5	106.45	104.47
172	174	1350	0.30	184.4	104.47	103.92
174	176	1350	0.30	156.7	103.92	103.45
176	152	1350	0.30	161.4	103.45	102.96
150	152	675	0.15	264.6	102.30	101.90
177	152	675	0.15	237.4	102.00	101.65
152	154	1500	0.35	175.8	101.45	100.82
154	156	1500	0.55	311.7	100.53	98.82
705 (ex.)	163	525	0.42	41.5	100.82	100.65
163	156	750	0.15	118.5	100.65	100.47
156	158	1500	0.55	202.6	97.86	96.74
158	159	1500	0.55	108.1	96.20	95.60
158	158A	1500	0.95	40.0	96.74	97.13
159	159A	1500	3.54	43.0	95.60	97.13
DI-2	300	900	1.05	121.1	105.68	104.39
300	302	900	0.35	168.1	104.39	103.81
302	304	900	0.94	162.6	102.02	100.49
304	321	1200	0.15	63.3	100.49	100.39
321	322	1200	0.15	88.2	100.39	100.28
322	323	1200	0.15	75.4	100.28	100.15
323	324	1200	0.35	140.8	100.15	99.82
320	324	825	0.15	139.2	99.83	99.62
324	330	1500	0.15	183.6	99.82	99.38
330	332	1500	0.15	144.2	99.38	99.16
332	334	1650	0.15	131.1	99.16	98.96
334	336	1650	0.15	173.3	98.96	98.70
336	337	1650	0.15	168.8	97.58	97.33
337	P2-N	1650	0.15	36.0	97.33	97.29
159	825HDS	1050	0.35	26.2	95.15	95.05
825HDS	822	1200	0.12	160.8	95.05	94.86
314	318	1050	0.15	170.2	101.68	101.43
316	318	1200	0.15	96.0	101.43	101.28
318	364	1200	0.58	266.2	101.28	99.62
364	362	1200	0.70	88.2	99.10	98.48
362	190	1200	0.70	177.7	97.78	96.54
351	190	600	0.67	134.4	95.83	94.93
754	190	1800	0.13	15.0	94.99	94.93
190	190A	1200	0.07	30.0	94.32	94.30
190A	190B	1200	0.09	52.7	94.30	94.25
190B	755	600	0.13	15.3	93.64	93.62
110	111	450	2.70	89.4	102.90	100.49
111	112	675	0.90	101.2	100.49	99.58
313	112	525	0.74	140.0	100.60	99.56
112	710	675	1.30	73.3	99.56	98.61
112	710	675	1.30	73.3	99.56	98.61
712	711	375	2.56	104.3	102.031	99.361
711	710	450	1.32	104.4	99.407	98.027
710	720	750	0.61	118.2	98.102	97.397
753	754	1800	0.11	54.9	95.008	94.949
754	755	1800	0.13	74.9	94.939	94.839
755	822	1800	0.13	79.5	94.84	94.74
EX.822	EX.821	1800	0.14	123.1	94.07	93.90
EX.821	EX.820	1800	0.15	121.9	93.90	93.71
EX.748	EX.747	600	0.20	83.1	95.95	95.79
EX.747	EX.745	600	0.99	12.1	95.72	95.60
EX.746	EX.744	600	0.20	69.4	95.58	95.44
EX.743	EX.744	450	1.31	81.4	95.92	94.92
EX.744	EX.820	675	0.32	12.4	93.75	93.70
EX.820	EX.102	1800	0.16	121.7	93.71	93.52
270	265	1500	0.15	100.0	99.40	99.30
265	260	1500	0.15	357.3	98.00	97.47
260	245	1500	0.15	227.8	97.47	97.12
250	245	1500	0.15	345.0	97.84	97.12
245	240	2100	0.15	84.9	97.12	97.00
240	Brazeau SWM Pond	2100	0.15	241.7	97.00	96.63
Brazeau SWM Pond	235	675	0.17	37.0	95.19	95.12
230	225	1500	0.15	450.0	97.56	96.99
225	215	1500	0.15	220.1	96.99	96.66
220	215	1500	0.15	408.7	97.27	96.66
215	Drummond SWM Pond	2100	0.15	350.0	96.66	96.13
Drummond SWM Pond	210	675	0.15	25.0	94.69	94.65
235	210	675	0.17	272.0	95.12	94.65
210	205	825	0.17	223.0	94.65	94.26
205	Flood Plain	825	0.17	617.0	94.26	92.94
900	227 (ex.)	975	0.15	120.0	97.83	97.75

patersongroup **memorandum**

consulting engineers

re: **Groundwater Infiltration Review**
Proposed Residential Development
Brazeau Pit and Drummonds Pit- Borrisokane Road - Ottawa

to: Caivan Communities - **Mr. Andrew Finnson** - afinnson@caivan.com

date: August 30, 2019

file: PG4504-MEMO.06 Revision 1

Paterson Group (Paterson) has prepared the current memorandum report to provide a review of the hydrogeological characteristics in support of groundwater infiltration recommendations for the aforementioned site.

Background Information

It is currently understood that the proposed residential development consists of a mixture of single family and townhouse style residential dwellings. It is also understood that the development will be serviced by municipal infrastructure that outlets to a stormwater management pond.

The field program for the geotechnical investigation at the Brazeau Pit was completed between November 16, 2018 and April 10, 2019. At that time, a total of 12 boreholes and 15 test pits were advanced to a maximum depth of 5.9 m below existing grade. The results of the investigation indicated that, in general, the subsurface profile consisted of a thin layer of fill material overlying a deposit of silty sand/sand with varying amounts of gravel and cobbles. A thick layer of fill material was encountered within the southeast portion of the subject site and primarily consisted of silty sand with varying amounts of clay, gravel, cobbles, organics and construction debris. This was typically underlain by a till deposit composed of a silty sand matrix with gravel, cobbles and boulders. A very stiff to stiff silty clay layer was noted between the silty sand/sand and till deposits at select boreholes within the western portion of the property. A DCPT test was completed at one borehole location and encountered practical refusal at a depth of 23.5 m. However, bedrock was not conclusively encountered as part of the geotechnical investigations for the proposed development.

The field program for the geotechnical investigation at the Drummonds Pit was completed between July 22 and July 26, 2019. At that time, a total of 8 boreholes and 14 test pits were advanced to a maximum depth of 11.3 m below existing grade. The results of the investigation indicated that, in general, the subsurface profile consisted of a fill material comprised of silty sand to sand and/or silty clay with varying amounts of gravel, cobbles and boulders. Depending on the depth of excavation during the extraction of the aggregate material, the above noted fill material is underlain by either silty sand/sand with varying amounts of gravel, cobbles and boulders or a glacial till deposit composed of a silty sand to silty clay matrix with varying amounts of gravel, cobbles and boulders. A very stiff to stiff silty clay layer was noted underlying the silty sand/sand or fill material at select test holes. A DCPT test was completed at one borehole location and encountered practical refusal at a depth of 11.6 m.

Bedrock was not conclusively encountered as part of the geotechnical investigations for the proposed development. However, based on available mapping, the site is located in an area where bedrock consists of dolomite of the Oxford formation, with overburden thickness ranging from 15 to 25 m.

Hydrogeological Setting

The subject site is located primarily within the Jock Downstream Reach subwatershed of the Jock watershed, with a negligible percentage of the property being located within the Mud Creek subwatershed of the Lower Rideau watershed.

Hydraulic Conductivity and Infiltration Values

Hydraulic conductivity testing was not completed as part of the geotechnical investigations for the proposed development. However, testing completed directly south of the subject site as part of the Community Development Plan (CDP) determined that the hydraulic conductivity of the silty sand/sand deposit ranged from 3.0×10^{-6} to 4.8×10^{-4} m/sec. The hydraulic conductivity values obtained from within the till deposit were slightly lower, and ranged from 5.0×10^{-7} to 7.6×10^{-5} m/sec. The values obtained from the field testing to the south are consistent with published values, and are considered applicable to the materials encountered at the subject site. With regards to the silty clay layer noted underlying the silty sand/sand deposit, hydraulic conductivity values were anticipated to range from 1.0×10^{-9} to 1.0×10^{-7} m/sec, and were based on published values. Due to the variability in the fill material noted on site, hydraulic conductivity values are anticipated to range from 1.0×10^{-7} to 1.0×10^{-4} m/sec and is dependant on the ratio of silty sand/sand to silty clay within the material. **For infiltration system design purposes, it is recommended to use an infiltration rate of 75 mm/hr for the Brazeau Pit site and an infiltration rate of 50 mm/hr for the Drummond Pit site.**

Based on discussions with David Schaeffer Engineering Ltd., it is understood that a version of the Etobicoke exfiltration system is being proposed for the development in order to ensure infiltration volumes to the underlying aquifer systems be maintained. The exfiltration system is proposed to be installed below the curb lines of the development and placed over native silty sand/sand, free-draining sand material 1.5 m in thickness or a silty sand/sand to silty clay fill material. **It is understood that the subject area is required to meet post-development infiltration levels of 40% of the area precipitation. It is further understood that the annual precipitation for the area is 844 mm, so a post-development infiltration level of 40% would require that a minimum infiltration of 338 mm be achieved for the subject site.**

Water Levels and Flow Directions

Water levels obtained at the time of the geotechnical investigations ranged from 0 to 9.1 m depth below existing grade. Based on the recovered water levels, it is expected that the local groundwater flow direction trends to the north towards the Jock River, located approximately 1.4 km north from the north property boundary of the Drummonds Pit. This is corroborated by the groundwater divide separating the Jock Downstream Reach subwatershed and the Mud Creek subwatershed located at the southern boundary of the Brazeau Pit. Its location at the southern edge of the property would suggest that groundwater flows north, away from the divide.

Groundwater Recharge and Discharge

The presence of overburden soils with moderate to high hydraulic conductivity overlying the bedrock aquifer units are considered to provide the potential for significant groundwater recharge within the study area. The Kars esker is considered to transmit large quantities of water that are recharged through the infiltration of precipitation within the non-cohesive material comprising the original overburden materials in the area. The subject site represents a small portion of the existing zone identified by the Mississippi-Rideau Source Protection Region (MRSPR) as a zone of significant groundwater recharge.

Recommendations

As previously discussed, existing conditions at the subject site currently allow for significant volumes of recharge to occur. As such, it is recommended that measures be taken as part of the proposed development to ensure that infiltration volumes to the underlying aquifer systems be maintained. In accomplishing this, the following are some of the potential measures that could be implemented at the subject site:

- ❏ Transport the water using a modified version of the Etobicoke exfiltration system for the development with a minimum 1 m vertical separation between the base of the system and the seasonally high water table to allow for adequate infiltration.
- ❏ Allocate land for City parks, providing opportunities to allow clean water to infiltrate into the overburden aquifer system.
- ❏ Promote infiltration of clean water from rooftops by directing stormwater to grassed areas as opposed to driveways and/or municipal infrastructure.
- ❏ Implement Low Impact Development (LID) measures in conjunction with BMP for stormwater quality and quantity control to assist in infiltrating clean water, treating salt impacted water where required or redirecting salt impacted water away from infiltration locations.

It is important to note that not all of the above may necessarily need to be employed at the subject site, and that the measures required to maintain existing infiltration will be dependant on the final design of the proposed development.

We trust that this information satisfies your requirements.

Best Regards,

Paterson Group Inc.



Mike Killam, P.Eng.

David J. Gilbert, P.Eng.

Paterson Group Inc.

Head Office and Laboratory
154 Colonnade Road South
Ottawa - Ontario - K2E 7J5
Tel: (613) 226-7381 Fax: (613) 226-6344

Northern Office and Laboratory
63 Gibson Street
North Bay - Ontario - P1B 8Z4
Tel: (705) 472-5331 Fax: (705) 472-2334

St. Lawrence Office
993 Princess Street
Kingston - Ontario - K7L 1H3
Tel: (613) 542-7381

J.F. Sabourin and Associates Inc.
52 Springbrook Drive,
Ottawa, ON K2S 1B9
T 613-836-3884 F 613-836-0332

jfsa.com

Ottawa. ON
Paris. ON
Gatineau. QC
Montréal. QC
Québec. QC

May 01, 2020 Project Number: P1800

David Schaeffer Engineering Limited
120 Iber Road, Unit 103
Stittsville, ON
K2S 1E9

Attention: **Mr. Kevin Murphy, P.Eng.**

Subject: **The Ridge (Brazeau):**
Low Impact Development (LID) Design

Introduction

As a part of the detailed design of the Ridge (Brazeau) subdivision, located in Barrhaven within the City of Ottawa, J.F. Sabourin and Associates Inc. (JFSA) were commissioned to complete an in-depth analysis of the proposed development and its Low Impact Development (LID) measures to ensure that the site's infiltration targets will be met post-development. The detailed study area consists of 27.058 ha, which will be serviced by a storm sewer system and stormwater management facility. Ultimately, this stormwater infrastructure will service a total drainage area of 71.75 ha, which will be required to meet the same infiltration requirements. A detailed PCSWMM hydrologic/hydraulic model was developed to replicate the proposed developments water budget using historical rainfall data. The following memo outlines the proposed developments water budget and the infiltration benefits that the LID's provide.

Site Infiltration Targets

As a part of the Master Servicing Study Barrhaven South Urban Expansion Area report completed by J.L. Richards in May 2018, it was determined that pre-development infiltration within the study area accounted for 40% of the overall sites water budget. The City and RVCA determined that pre-development infiltration levels should be maintained under post-development conditions and that the infiltration should be provided across the development and not simply concentrated to one or two locations. The City and RVCA determined that the preferred infiltration servicing strategy for this area would be Etobicoke Exfiltration Systems (EES) and that these systems should be limited only to local roads and their respective catchments, with the intent to prohibit any infiltration of roadway runoff from either collector or arterial roads due to the salting practices applied at those locations.

Etobicoke Exfiltration System (EES) Design

Within the Ridge development, there will be a total of 24 EESs implemented, to meet the infiltration requirements outlined above. The EES units will be installed underneath storm sewers within the right-of-way (ROW) in specific areas as determined by David Schaeffer Engineering (DSEL) as a part of the developments detailed design. Each system will consist of one or two 250 mm diameter perforated pipes surrounded by a 0.85 m deep by 1.20 m wide clear stone trench. Detail drawings of the proposed EES units are provided in Figure 1. The location of each EES and its respective design geometries are indicated in Figure 2. Table A1 to A3 in Attachment A provides a full summary of the design parameters for each EES. Note that there are no LID measures proposed on private property (residential rear yards) or within the parklands.

Modelling Approach

The model used for this water budget analysis builds on the existing detailed PCSWMM model of the Ridge (Brazeau) development, which was created as a part of the stormwater management analysis. All components of this model remain unaltered, such as subcatchment parameters, SWM pond configuration, catch basins and the major and minor systems, with the only exception being the large undetailed external lands that were simulated using SWMHYMO, that were included in the SWM analysis to ensure the ultimate SWM design is sufficient. For details regarding all model's parameters, refer to JFSA's "Stormwater Management Report for The Ridge (Brazeau) Subdivision", April 2020.

The storage provided by each of the EESs has been represented in the model as storage nodes, with appropriate depth/area curves assigned to each EES based on the detailed design parameters. A porosity of 0.4 has been assumed for all EESs, and as all units will contain a perforated PVC pipe to help disperse the runoff throughout the entire system, the storage volume provided by these pipes has also been accounted for in the EES storage volume curves.

The soil infiltration rate for the site, determined by Paterson Group (see below), was reduced by a factor of safety of 2.5 as per the guidance from Credit Valley and Toronto and Region Conservation Authorities on Low Impact Development. A specific outlet curve (depth/flow relationship) was developed for each EES, based on its respective geometry. Note that this analysis only considered infiltration through the bottom of the EES, resulting in a conservative estimate for the total infiltration benefits provided by each EES. The total flow through each outlet curve was then used to determine the total infiltration provided by each EES.

The proposed EESs were connected to their respective maintenance holes in the model through an orifice of 250 mm with a discharge coefficient of 0.82 (short pipe) to reflect any restriction that the proposed perforated pipe could have on conveying flow from the maintenance hole to the EES. Note that all EESs are named after the maintenance hole that they are connected to.

Soil Infiltration Rate

Paterson Group conducted soil infiltration testing within the vicinity of the proposed EES measures, which determined a soil infiltration rate of 75 mm/hr for the Ridge (Brazeau) site. Email correspondence indicating the infiltration rate obtained by Paterson for the subject site has been included in Attachment A. For the subcatchments within the development, default Hortons infiltration values have been applied as per the City of Ottawa Sewer Design Guidelines (2012).

Evaporation & Evapotranspiration Parameters

To ensure that the depression storage within the models subcatchments can regenerate after the first rainfall event, monthly evaporation rates have been applied. The Master Servicing Study provided no documentation on the surface evaporation rates used in that analysis, and as such monthly evaporation rates applied in this model are as per those specified in the City of Ottawa's PCSWMM Carp River model documentation. A summary of these monthly values can be found in Attachment A Table A4.

To ensure that evapotranspiration is appropriately accounted for in the continuous simulation water budget, the groundwater routine within the model's hydrologic algorithm has been activated. Groundwater parameters have been applied as specified for type A soils in the J L Richards Master Servicing Study. Excerpts from this report regarding the groundwater parameters have been provided in Attachment A.

Continuous Simulations

The detailed PCSWMM model was run for 39 years, from 1967 to 2007, using hourly rainfall data from Environment Canada's Ottawa International Airport station. Note that there was no data available for the years 2001 and 2005 in this data set. The hourly rainfall data used in this analysis is a heavily reviewed and vetted product sold by Environment Canada, and only includes rainfall data and does not include any snowfall that occurred during this window. The yearly operational window for this rain gauge consistently started on April 1st, but the end of operation varied from year to year and was either the last day of October or November. For consistency, all simulations were run from April 1st to December 7th, note an additional 7 days were added to the simulation to ensure any volume still contained within the EESs was able to infiltrate out of the system. Table A5 in Attachment A provides a full summary of the rainfall data used in this analysis. From this rainfall data, it is seen that the average yearly simulated rainfall for this window is 552.0 mm.

Based on Environment Canada normals data for the Ottawa MacDonald Cartier International Airport, the annual average rainfall is 758.2 mm. Reducing this window to include only the months of April to October, the average total rainfall is 585.6 mm, see Table A6 in Attachment A for full details. Note that this normals analysis was completed for the years 1981 to 2010, The discrepancy between the hourly rainfall data and the normals summary may be simply in part due to the difference in years analyzed. As specified by the Master Servicing Study, the proposed development should infiltrate 40% of the annual runoff. As the hourly rainfall data used in this simulation does not extend the full year, the infiltration target for this analysis has been assumed to be 40% of the average simulated rainfall volume (552.0 mm), which is calculated to be 220.8 mm or 59,744 m³ based on the 27.058 ha study area.

Simulation Results

Table 1 outlines the average simulated infiltration volumes for each of the proposed EESs contained within the development, as per the model simulations from 1967 - 2007. From this analysis, it was found that on average each EES will infiltrate approximately 1,334 m³ / 4.9 mm, and all EESs on average will infiltrate 32,009m³ / 118.2 mm per year, based on the simulated window (April- Nov). Infiltration volumes for each EES for each year have been provided in Tables B1 in Attachment B. Also provided in Attachment B are full summaries of the surface runoff, surface evaporation, surface infiltration and groundwater evapotranspiration for each of the subcatchments within the model for each simulated year. Note that the surface infiltration volumes have not been considered as "truly infiltrated" in this water budget analysis, as these volumes are simply an indicator of the rainfall volume that is passed to the groundwater module. This volume will then either evapotranspirate or infiltrate into the groundwater aquifer, based on the program's groundwater algorithms. The volumes infiltrated into the acquire as a part of the groundwater module has been considered as infiltrated in the water budget.

Table 1: EES Infiltration Summary (April - November)

EES ID	Average Infiltration (m^3)
ESS_MH_102	1,463
ESS_MH_103	2,200
ESS_MH_104	825
ESS_MH_108	790
ESS_MH_109	525
ESS_MH_110	1,142
ESS_MH_111	550
ESS_MH_114	1,446
ESS_MH_119	1,307
ESS_MH_120	329
ESS_MH_121	1,663
ESS_MH_125	1,883
ESS_MH_127	978
ESS_MH_128	103
ESS_MH_129	1,279
ESS_MH_130	1,244
ESS_MH_204	1,952
ESS_MH_208	2,345
ESS_MH_215	1,444
ESS_MH_217	2,898
ESS_MH_218	1,031
ESS_MH_222	2,154
ESS_MH_223	1,024
ESS_MH_227	1,433
Average	1,334
Total	32,009

Table 2 outlines the water budget breakdown of the development based on the 39 years of simulations, this includes evaporation, evapotranspiration, infiltration, and runoff from the various components within the development. From this analysis, it was found that the proposed EESs within the development will on average infiltrate 32,009m^3 / 118.2 mm (21% of the total precipitation) while the pervious surfaces within the development will infiltrate 37,806 m^3 / 139.7 mm (25% of the total precipitation). Adding the infiltration provided by the EESs and the pervious surfaces yearly results in the average total infiltration for the site to be 69,816 m^3 / 258 mm (46% of the total precipitation). This exceeds the 40% infiltration requirement set out by the Master Servicing study by 10,072m^3 / 37mm (6% of the total precipitation).

Table 2: Brazeau Development Water Budget Summary

Year	Rainfall		Subcatchments						Groundwater				EES		Water Budget Summary					
	[1]	[2]	[3]		[4]		[5]		[6]		[5]-[6]		[7]		[3]-[7]		[4]+[6]		[5]-[6]+[7]	
	(mm)	(m^3)	Surface Runoff (m^3)		Surface Evaporation (m^3)		Surface Infiltration (m^3)		Evapotranspiration (m^3)		Subsurface Infiltration (m^3)		EES Infiltration (m^3)		Total Runoff (m^3)		Total Evaporation (m^3)		Infiltration (m^3)	
1967	373	100,925	39,389	39%	7,763	8%	54,931	54%	19,706	20%	35,225	35%	22,207	22%	17,182	17%	27,469	27%	57,432	57%
1968	520.6	140,862	53,080	38%	14,199	10%	75,850	54%	44,731	32%	31,119	22%	29,343	21%	23,737	17%	58,930	42%	60,462	43%
1969	499	135,017	48,882	36%	15,354	11%	72,631	54%	44,365	33%	28,265	21%	31,343	23%	17,539	13%	59,719	44%	59,608	44%
1970	538.1	145,597	55,887	38%	16,267	11%	76,019	52%	42,555	29%	33,464	23%	31,199	21%	24,688	17%	58,821	40%	64,663	44%
1971	491	132,852	45,914	35%	17,424	13%	70,869	53%	42,392	32%	28,477	21%	28,354	21%	17,560	13%	59,816	45%	56,831	43%
1972	764.1	206,747	82,437	40%	19,532	9%	108,006	52%	40,812	20%	67,194	33%	42,342	20%	40,095	19%	60,344	29%	109,536	53%
1973	670.1	181,313	69,999	39%	16,948	9%	96,249	53%	43,057	24%	53,192	29%	38,264	21%	31,735	18%	60,005	33%	91,456	50%
1974	332.1	89,858	29,920	33%	13,536	15%	47,772	53%	43,983	49%	3,790	4%	20,585	23%	9,335	10%	57,519	64%	24,375	27%
1975	497.7	134,665	51,770	38%	13,793	10%	71,219	53%	41,270	31%	29,949	22%	28,181	21%	23,589	18%	55,063	41%	58,130	43%
1976	467.5	126,494	43,137	34%	16,738	13%	68,505	54%	43,294	34%	25,211	20%	28,849	23%	14,288	11%	60,032	47%	54,060	43%
1977	587.6	158,990	59,247	37%	16,170	10%	86,111	54%	43,287	27%	42,824	27%	36,833	23%	22,414	14%	59,457	37%	79,657	50%
1978	558.2	151,035	54,895	36%	18,245	12%	80,449	53%	43,015	28%	37,433	25%	32,340	21%	22,555	15%	61,261	41%	69,773	46%
1979	753.6	203,906	81,090	40%	16,922	8%	108,478	53%	43,421	21%	65,057	32%	38,886	19%	42,204	21%	60,343	30%	103,943	51%
1980	555	150,169	53,228	35%	17,068	11%	82,012	55%	43,070	29%	38,941	26%	34,105	23%	19,123	13%	60,138	40%	73,046	49%
1981	840.9	227,527	93,387	41%	20,678	9%	116,085	51%	40,482	18%	75,603	33%	43,155	19%	50,232	22%	61,160	27%	118,758	52%
1982	542.6	146,814	53,350	36%	15,054	10%	80,280	55%	43,696	30%	36,585	25%	34,296	23%	19,054	13%	58,749	40%	70,881	48%
1983	537	145,299	51,588	36%	16,335	11%	79,476	55%	43,314	30%	36,162	25%	34,503	24%	17,085	12%	59,649	41%	70,665	49%
1984	416.2	112,613	41,395	37%	10,734	10%	61,464	55%	41,804	37%	19,660	17%	24,987	22%	16,408	15%	52,538	47%	44,647	40%
1985	456	123,382	44,890	36%	14,120	11%	66,653	54%	44,226	36%	22,428	18%	25,329	21%	19,561	16%	58,345	47%	47,757	39%
1986	814	220,248	83,497	38%	19,107	9%	120,323	55%	41,307	19%	79,016	36%	44,932	20%	38,565	18%	60,414	27%	123,948	56%
1987	602.9	163,130	59,373	36%	17,485	11%	88,442	54%	42,837	26%	45,605	28%	36,026	22%	23,347	14%	60,322	37%	81,631	50%
1988	610.2	165,105	63,292	38%	16,842	10%	87,407	53%	43,092	26%	44,315	27%	35,627	22%	27,665	17%	59,934	36%	79,942	48%
1989	512.8	138,751	49,371	36%	16,027	12%	74,837	54%	43,555	31%	31,282	23%	31,252	23%	18,119	13%	59,582	43%	62,534	45%
1990	651.2	176,199	63,216	36%	18,926	11%	95,504	54%	40,871	23%	54,633	31%	38,249	22%	24,967	14%	59,797	34%	92,882	53%
1991	520.4	140,807	49,276	35%	16,065	11%	76,667	54%	43,429	31%	33,239	24%	33,030	23%	16,246	12%	59,494	42%	66,269	47%
1992	621.2	168,081	64,230	38%	17,249	10%	88,592	53%	41,852	25%	46,740	28%	36,429	22%	27,801	17%	59,101	35%	83,169	49%
1993	643.5	174,115	61,019	35%	20,086	12%	94,880	54%	41,133	24%	53,746	31%	40,521	23%	20,498	12%	61,219	35%	94,267	54%
1994	514.5	139,211	51,418	37%	14,812	11%	75,262	54%	44,654	32%	30,608	22%	28,160	20%	23,258	17%	59,467	43%	58,768	42%
1995	443.6	120,027	47,267	39%	8,874	7%	64,835	54%	44,207	37%	20,628	17%	20,680	17%	26,587	22%	53,081	44%	41,308	34%
1996	476.8	129,010	46,518	36%	14,127	11%	69,914	54%	44,189	34%	25,726	20%	29,234	23%	17,284	13%	58,316	45%	54,960	43%
1997	363.6	98,381	34,237	35%	11,838	12%	53,529	54%	43,884	45%	9,645	10%	24,421	25%	9,816	10%	55,722	57%	34,066	35%
1998	440.3	119,134	40,949	34%	16,054	13%	64,576	54%	42,343	36%	22,232	19%	25,970	22%	14,979	13%	58,397	49%	48,202	40%
1999	424.4	114,832	40,682	35%	13,910	12%	62,413	54%	43,421	38%	18,992	17%	24,243	21%	16,439	14%	57,330	50%	43,235	38%
2000	535.9	145,001	49,771	34%	18,803	13%	78,307	54%	41,112	28%	37,195	26%	30,258	21%	19,513	13%	59,915	41%	67,453	47%
2001	-	-	-	-	-	-	-	-	-	-	-	-	-	-	-	-	-	-	-	-
2002	551.5	149,222	60,203	40%	12,881	9%	78,049	52%	45,170	30%	32,880	22%	29,359	20%	30,844	21%	58,050	39%	62,239	42%
2003	554.6	150,061	53,148	35%	17,382	12%	81,585	54%	41,663	28%	39,922	27%	31,764	21%	21,384	14%	59,045	39%	71,686	48%
2004	573.3	155,121	64,645	42%	15,997	10%	76,670	49%	43,375	28%	33,295	21%	26,063	17%	38,582	25%	59,372	38%	59,358	38%
2005	-	-	-	-	-	-	-	-	-	-	-	-	-	-	-	-	-	-	-	-
2006	723.4	195,734	73,268	37%	17,840	9%	107,490	55%	41,866	21%	65,623	34%	43,928	22%	29,340	15%	59,707	31%	109,551	56%
2007	550.7	149,006	52,994	36%	17,665	12%	80,822	54%	42,284	28%	38,538	26%	33,118	22%	19,876	13%	59,949	40%	71,656	48%
Average	552.0	149,365	55,432	37%	15,868	11%	80,081	54%	42,275	28%	37,806	25%	32,009	21%	23,423	15%	58,143	39%	69,816	46%

Notes:

Total drainage area 27.058 ha

Surface Infiltration not considered as a part of the total infiltration, as this value is simply the volume that is passed to the groundwater module.

Conclusion

In summary, the detailed PCSWMM model of the proposed Ridge (Brazeau) development has been updated to include the EES measures proposed within the site. Continuous simulations using 39 years of historical rainfall data determined that the proposed water budget for the Ridge subdivision would be 15% surface runoff, 39% evaporation and 46% infiltration. From this analysis, it was found that the proposed EESs within the development will on average infiltrate 32,009m³ / 118.2 mm (21% of the total precipitation) while the pervious surfaces within the development will infiltrate 37,806 m³ / 139.7 mm (25% of the total precipitation). Adding the infiltration provided by the EESs and the pervious surfaces yearly results in the average total infiltration for the site to be 69,816 m³ / 258 mm (46% of the total precipitation). This exceeds the 40% infiltration requirement set out by the Master Servicing study by 10,072m³ / 37mm (6% of the total precipitation), confirming that the proposed development will not adversely affect the existing groundwater recharge and existing infiltration budget.

Yours truly,
J.F Sabourin and Associates Inc.



Jonathon Burnett, B.Eng, P.Eng
Water Resources Engineer

cc: J.F Sabourin, M.Eng, P.Eng
Director of Water Resources Projects

Figures

Figure 1: Exfiltration System Details
Figure 2: Exfiltration System Locations

Tables

Table 1: EES Infiltration Summary (April - November)
Table 2: Water Budget Summary

Attachments

Attachment A: Continuous Simulation Parameters & Background Information
Attachment B: Continuous Simulation Results

EXFILTRATION TRENCH – ROADS

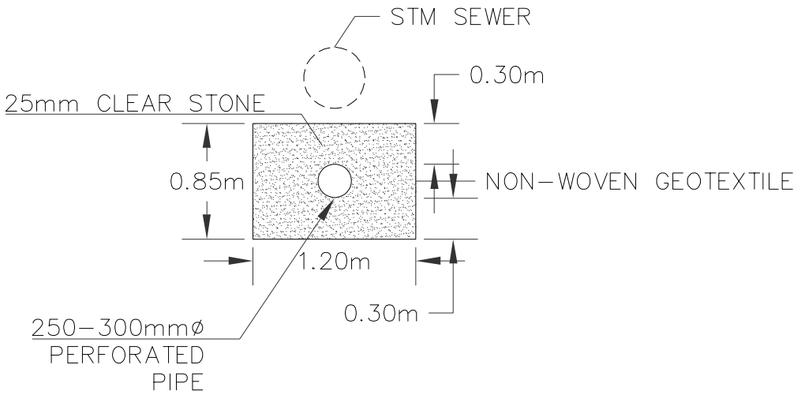

SECTION DETAIL A

SCALE: N.T.S.

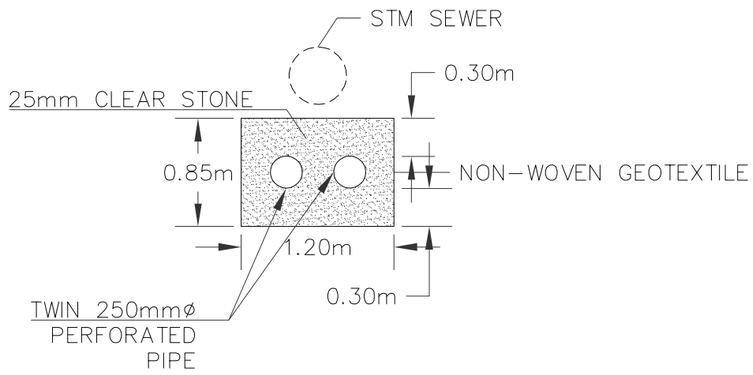

SECTION DETAIL A

SCALE: N.T.S.

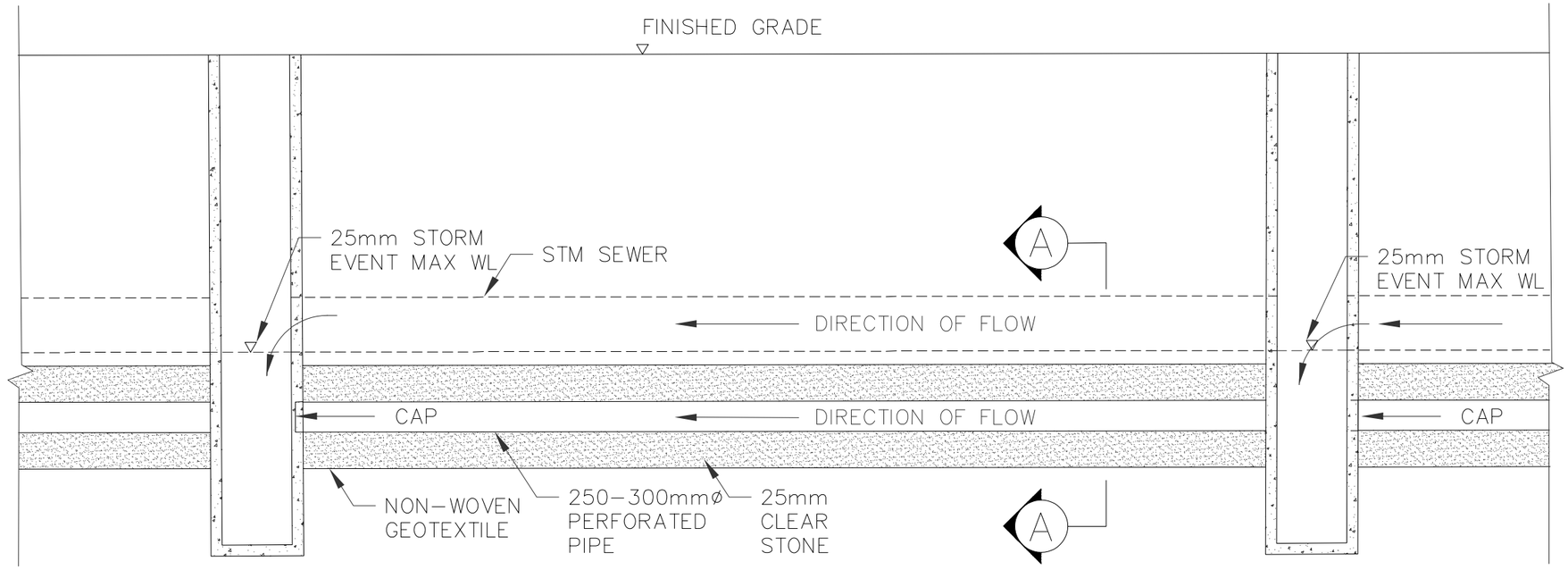

PROFILE

SCALE: N.T.S.

SCALE : NTS

J.F. Sabourin & Associates Inc.
WATER RESOURCES AND ENVIRONMENTAL CONSULTANTS
OTTAWA (613) 836–3884
GATINEAU (819) 243–6858

CLIENT :
DAVID SCHAEFFER
ENGINEERING LTD.

PROJECT :
THE RIDGE PHASE 1
SUBDIVISION

BY	DATE	DESCRIPTION	BY

EXFILTRATION
SYSTEM DETAILS

FIGURE 1

DESIGNED:
DRAWN: BL
VERIFIED: JFS
APPROVED: JFS

DRAWING REF.
1800–19\202001 LID Subm3\
Design\CAD\Figure 1 & 2.dwg

DATE: APRIL 2020
PROJECT No.: 1800

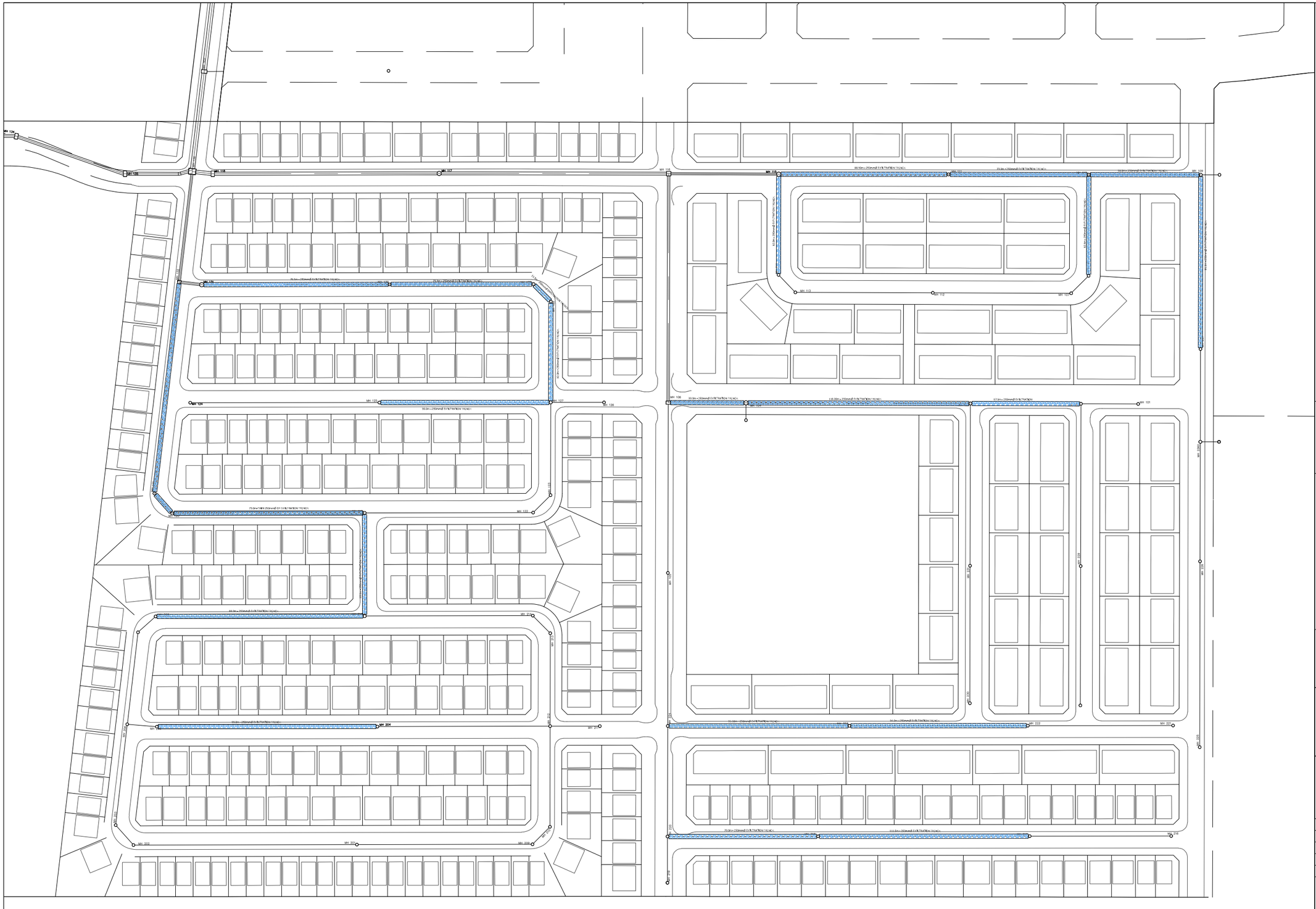

LEGEND:

Etobicoke Exfiltration System

SCALE :

0 40 80 120

J.F. Sabourin & Associates Inc.
WATER RESOURCES AND ENVIRONMENTAL CONSULTANTS
OTTAWA (613) 836-3884
GATINEAU (819) 243-6858

CLIENT :

DAVID SCHAEFFER
ENGINEERING LTD.

PROJECT :

THE RIDGE PHASE 1
SUBDIVISION

BY	DATE	DESCRIPTION	BY

EXFILTRATION
SYSTEM LOCATIONS

FIGURE 2

DESIGNED:	
DRAWN:	BL
VERIFIED:	JFS
APPROVED:	JFS
DATE	PROJECT No.
JAN 2020	1800

DRAWING REF.
1800-19\202001 LID Subm3\
Design\CAD\Figure 1 & 2.dwg

J.F. Sabourin and Associates Inc.
52 Springbrook Drive,
Ottawa, ON K2S 1B9
T 613-836-3884 F 613-836-0332

jfsa.com

Ottawa. ON
Paris. ON
Gatineau. QC
Montréal. QC
Québec. QC

Attachment A

Continuous Simulation Parameters & Background Information

Table A1 - Etobikoe Exfiltration System - Parameters

Parameter	EES_MH_204	EES_MH_208	EES_MH_215	EES_MH_119	EES_MH_120	EES_MH_121	EES_MH_125	EES_MH_127	EES_MH_128	EES_MH_129	EES_MH_130	EES_MH_217	EES_MH_218	EES_MH_223	EES_MH_222	EES_MH_102	EES_MH_103	EES_MH_104	EES_MH_227	EES_MH_109	EES_MH_110	EES_MH_111	EES_MH_114	EES_MH_108
Number of Pipes	1	1	1	1	1	1	1	1	1	1	1	1	1	1	1	1	1	1	1	1	1	1	1	1
Pipe Diameter (mm)	250	250	250	250	250	250	250	250	250	250	250	250	250	250	250	250	250	250	250	250	250	250	250	250
Pipe Length (m)	99	88	53.5	79	12.5	112	90	52	11	75.5	76.5	111.5	79	95.5	94	57.5	118	39	91.5	58	73	88.5	52	52.5
Pipe Volume (m^3)	4.86	4.32	2.63	3.88	0.61	5.50	4.42	2.55	0.54	3.71	3.76	5.47	3.88	4.69	4.61	2.82	5.79	1.91	4.49	2.85	3.58	4.34	2.55	2.58
Trench Width (m)	1.2	1.2	1.2	1.2	1.2	1.2	1.2	1.2	1.2	1.2	1.2	1.2	1.2	1.2	1.2	1.2	1.2	1.2	1.2	1.2	1.2	1.2	1.2	1.2
Trench Height (m)	0.85	0.85	0.85	0.85	0.85	0.85	0.85	0.85	0.85	0.85	0.85	0.85	0.85	0.85	0.85	0.85	0.85	0.85	0.85	0.85	0.85	0.85	0.85	0.85
Trench Length (m)	99	88	53.5	79	12.5	112	90	52	11	75.5	76.5	111.5	79	95.5	94	57.5	118	39	91.5	58	73	88.5	52	52.5
Void Ratio	0.4	0.4	0.4	0.4	0.4	0.4	0.4	0.4	0.4	0.4	0.4	0.4	0.4	0.4	0.4	0.4	0.4	0.4	0.4	0.4	0.4	0.4	0.4	0.4
Trench Volume (m^3)	38.45	34.18	20.78	30.68	4.85	43.50	34.95	20.19	4.27	29.32	29.71	43.30	30.68	37.09	36.51	22.33	45.83	15.15	35.54	22.53	28.35	34.37	20.19	20.39
Total Volume (m^3)	43.31	38.50	23.40	34.56	5.47	48.99	39.37	22.75	4.81	33.03	33.47	48.78	34.56	41.78	41.12	25.15	51.62	17.06	40.03	25.37	31.93	38.71	22.75	22.97
Infiltration Rate (mm/hr)	75	75	75	75	75	75	75	75	75	75	75	75	75	75	75	75	75	75	75	75	75	75	75	75
Safety Factor	2.5	2.5	2.5	2.5	2.5	2.5	2.5	2.5	2.5	2.5	2.5	2.5	2.5	2.5	2.5	2.5	2.5	2.5	2.5	2.5	2.5	2.5	2.5	2.5
Bottom Area (m^2)	118.8	105.6	64.2	94.8	15	134.4	108	62.4	13.2	90.6	91.8	133.8	94.8	114.6	112.8	69	141.6	46.8	109.8	69.6	87.6	106.2	62.4	63
Infiltration Flow Rate (m^3/s)	0.00099	0.00088	0.00054	0.00079	0.00013	0.00112	0.00090	0.00052	0.00011	0.00076	0.00077	0.00112	0.00079	0.00096	0.00094	0.00058	0.00118	0.00039	0.00092	0.00058	0.00073	0.00089	0.00052	0.00053
MH Invert	103.579	102.671	100.303	99.144	98.878	98.79	98.481	98.177	98.039	97.923	97.732	104.573	104.327	102.148	102.311	99.917	98.755	97.975	100.759	99.151	98.346	97.925	98.296	98.908
New MH Invert	103.029	102.121	99.753	98.594	98.328	98.24	97.931	97.627	97.489	97.373	97.182	104.023	103.777	101.598	101.761	99.367	98.205	97.425	100.209	98.601	97.796	97.375	97.746	98.358
Pipe Elevation	102.979	102.071	99.703	98.544	98.278	98.19	97.881	97.577	97.439	97.323	97.132	103.973	103.727	101.548	101.711	99.317	98.155	97.375	100.159	98.551	97.746	97.325	97.696	98.308
EES Bottom	102.679	101.771	99.403	98.244	97.978	97.89	97.581	97.277	97.139	97.023	96.832	103.673	103.427	101.248	101.411	99.017	97.855	97.075	99.859	98.251	97.446	97.025	97.396	98.008

Table A2 - Etobikoe Exfiltration System - Infiltration Curves
(m^3/s)

Depth	EES_MH_204	EES_MH_208	EES_MH_215	EES_MH_119	EES_MH_120	EES_MH_121	EES_MH_125	EES_MH_127	EES_MH_128	EES_MH_129	EES_MH_130	EES_MH_217	EES_MH_218	EES_MH_223	EES_MH_222	EES_MH_102	EES_MH_103	EES_MH_104	EES_MH_227	EES_MH_109	EES_MH_110	EES_MH_111	EES_MH_114	EES_MH_108
0.000	0.00000	0.00000	0.00000	0.00000	0.00000	0.00000	0.00000	0.00000	0.00000	0.00000	0.00000	0.00000	0.00000	0.00000	0.00000	0.00000	0.00000	0.00000	0.00000	0.00000	0.00000	0.00000	0.00000	0.00000
0.005	0.00099	0.00088	0.00054	0.00079	0.00013	0.00112	0.00090	0.00052	0.00011	0.00076	0.00077	0.00112	0.00079	0.00096	0.00094	0.00058	0.00118	0.00039	0.00092	0.00058	0.00073	0.00089	0.00052	0.00053
5.000	0.00099	0.00088	0.00054	0.00079	0.00013	0.00112	0.00090	0.00052	0.00011	0.00076	0.00077	0.00112	0.00079	0.00096	0.00094	0.00058	0.00118	0.00039	0.00092	0.00058	0.00073	0.00089	0.00052	0.00053

Table A3 - Etobikoe Exfiltration System - Storage Curves
(m^2)

Depth	EES_MH_204	EES_MH_208	EES_MH_215	EES_MH_119	EES_MH_120	EES_MH_121	EES_MH_125	EES_MH_127	EES_MH_128	EES_MH_129	EES_MH_130	EES_MH_217	EES_MH_218	EES_MH_223	EES_MH_222	EES_MH_102	EES_MH_103	EES_MH_104	EES_MH_227	EES_MH_109	EES_MH_110	EES_MH_111	EES_MH_114	EES_MH_108
0.000	50.95	45.29	27.53	40.66	6.43	57.64	46.32	26.76	5.66	38.86	39.37	57.38	40.66	49.15	48.38	29.59	60.73	20.07	47.09	29.85	37.57	45.55	26.76	27.02
0.850	50.95	45.29	27.53	40.66	6.43	57.64	46.32	26.76	5.66	38.86	39.37	57.38	40.66	49.15	48.38	29.59	60.73	20.07	47.09	29.85	37.57	45.55	26.76	27.02
0.851	0.001	0.001	0.001	0.001	0.001	0.001	0.001	0.001	0.001	0.001	0.001	0.001	0.001	0.001	0.001	0.001	0.001	0.001	0.001	0.001	0.001	0.001	0.001	0.001
5.000	0.001	0.001	0.001	0.001	0.001	0.001	0.001	0.001	0.001	0.001	0.001	0.001	0.001	0.001	0.001	0.001	0.001	0.001	0.001	0.001	0.001	0.001	0.001	0.001

Table A4 - Monthly Evaporation

Month	Evaporation Rate (mm/Day)
January	0.0000
February	0.0000
March	0.0000
April	1.1330
May	2.5160
June	3.9330
July	4.5160
August	3.8710
September	2.3670
October	1.3870
November	0.2000
December	0.0000

Source:

Table 10- MODEL DEVELOPMENT PROGRAM – CARP RIVER RESTORATION PLAN - Appendices, City of Ottawa (Feb 2014)

Table A5 - Historical Rainfall Data
Summary:
Ottawa International Airport

Year	Rainfall Volume (mm)
1967	373.0
1968	520.6
1969	499.0
1970	538.1
1971	491.0
1972	764.1
1973	670.1
1974	332.1
1975	497.7
1976	467.5
1977	587.6
1978	558.2
1979	753.6
1980	555.0
1981	840.9
1982	542.6
1983	537.0
1984	416.2
1985	456.0
1986	814.0
1987	602.9
1988	610.2
1989	512.8
1990	651.2
1991	520.4
1992	621.2
1993	643.5
1994	514.5
1995	443.6
1996	476.8
1997	363.6
1998	440.3
1999	424.4
2000	535.9
2001	
2002	551.5
2003	554.6
2004	573.3
2005	
2006	723.4
2007	550.7
Average	552.0
Total	21529.1

No Data Available

Ottawa International Airport
1981 to 2010 Canadian Climate Normals Station Data

Parameters	Jan	Feb	Mar	Apr	May	Jun	Jul	Aug	Sep	Oct	Nov	Dec	Total
Rainfall (mm)	25.0	18.7	31.1	63.0	80.1	92.8	91.9	85.5	90.1	82.2	64.5	33.5	**758.2**
Snowfall (cm)	53.9	43.3	38.3	11.3	0.2	0.0	0.0	0.0	0.0	3.7	20.2	52.5	**223.5**
Precipitation (mm)	65.4	54.3	64.4	74.5	80.3	92.8	91.9	85.5	90.1	86.1	81.9	76.4	**943.4**

Source:

https://climate.weather.gc.ca/climate_normals/results_1981_2010_e.html?searchType=stnName&txtStationName=ottawa&searchMethod=contains&txtCentralLatMin=0&txtCentralLatSec=0&txtCentralLongMin=0&txtCentralLongSec=0&stnID=4337&dispBack=0#station-metadata

From: David Gilbert <DGilbert@Patersongroup.ca>
Sent: August 29, 2019 5:30 PM
To: Susan Murphy <susan.murphy@caivan.com>; Steve Pichette <SPichette@dsel.ca>
Cc: Michael Killam <MKillam@Patersongroup.ca>
Subject: Drummonds and Brazeau Pit - Infiltration information

Hi guys,

I spoke with Bobby Pettigrew at JL Richards and he used 40% of area precipitation to be infiltrated over a 30 year period using the infiltration system. Annual precipitation in water budget was noted to be 844 mm, so infiltration of 40% would be 338 mm. He noted that this amount was equivalent to full infiltration of a 22 mm rain event. The infiltration rate for system design for Brazeau Pit is 75 mm/hour and for Drummond Pit is 50 mm/hour. We are working on the groundwater contour plan based on our current groundwater observations for both sites. This drawing should be ready tomorrow.

Dave

David Gilbert, P.Eng.
Senior Geotechnical Engineer
patersongroup
solution oriented engineering
over 60 years serving our clients

154 Colonnade Road South
Ottawa, Ontario, K2E 7J5
Tel: (613) 226-7381 Ext. 205

3.0 GROUNDWATER

3.1 Groundwater Parameters

<table>
<tr><th>Parameter</th><th>Units</th><th>Description</th></tr>
<tr><td>Aquifer Name</td><td>-</td><td>Name of the aquifer representing soil conditions. Four Aquifers were created based on different soil conditions from OSG mapping. Only two of the aquifers are used within the study area.
<table>
<tr><th>Aquifer</th><th>Description</th><th>Clay content (%)</th><th>Sand content (%)</th></tr>
<tr><td>A</td><td>Sand</td><td>5</td><td>92</td></tr>
<tr><td>B</td><td>Sandy Loam</td><td>10</td><td>65</td></tr>
<tr><td>C (not used)</td><td>Sandy Clay Loam</td><td>28</td><td>60</td></tr>
<tr><td>D (not used)</td><td>Clay Loam</td><td>34</td><td>33</td></tr>
</table></td></tr>
<tr><td>Receiving Node</td><td>-</td><td>Name of the receiving node for groundwater outflow to baseflow. This is based on the groundwater subwatershed delineation.</td></tr>
<tr><td>Surface Elevation</td><td>m</td><td>Elevation of the ground surface for the subcatchment was averaged from the Patterson report.
Value: 107</td></tr>
<tr><td>Coefficients</td><td></td><td>The coefficients were set for the saturated groundwater zone to represent a storage reservoir where outflow is linear proportional to the water table depth without surface water interaction. It was considered that the nearest open water channels were sufficiently far to have negligible impact on groundwater levels. The groundwater equation used is:
$f_G = A1\ (d_L - h_{sw})$
Where:
f_G = groundwater flow
d_L = depth of the lower saturated subsurface zone
h_{sw} = height of surface water above the bottom of the groundwater zone
A1 = Calibration factor (estimated at 0.05)
Value: 0.05</td></tr>
<tr><td>Surface Water Depth</td><td>m</td><td>Set as 0.5 metres to allow flow from the water table to surrounding watercourses.
Value: 0.5</td></tr>
</table>

Parameter	Units	Description
Initial Elevation	m	Initial elevation of the water table **Value: 95.5**
		All other parameters used as per the receiving node or aquifer

3.2 Aquifer Parameters

Parameter	Units	Description / Values
Porosity	Fraction	The following values were used for the volumetric water content of the soil at saturation (i.e. volume of water per total volume): **Soil Group** / **A** / **B** / **C** / **D** Porosity / 0.436 / 0.450 / 0.432 / 0.472 *(Source: SPAW Calculator)*
Wilting Point	Fraction	This is soil moisture contact at which plants cannot obtain sufficient moisture from the soil to meet transpiration requirements and they will die. It is roughly equivalent to the moisture content of soil at 15 atmospheres. The following values were used: **Soil Group** / **A** / **B** / **C** / **D** Wilting Point / 0.050 / 0.081 / 0.183 / 0.213 *(Source: SPAW Calculator)*
Field Capacity	Fraction	Considered to be the amount of water a well-drained soil holds after free water has drained off. The following values were used: **Soil Group** / **A** / **B** / **C** / **D** Field Capacity / 0.094 / 0.179 / 0.283 / 0.350 *(Source: SPAW Calculator)*
Conductivity	mm/hr	Within the Aquifer Parameters, the soil saturated conductivity is a governing parameter of the percolation rate between the upper unsaturated soil layer and the lower saturated soil layer. This is not the same as any hydraulic conductivity used for the surface infiltration. The values have been selected from the SPAW calculator and are: **Soil Group** / **A** / **B** / **C** / **D** Conductivity (mm/hr) / 114 / 50.3 / 7.8 / 4.6 *(Source: SPAW Calculator)*

<table>
<tr><th>Parameter</th><th>Units</th><th>Description / Values</th></tr>
<tr><td>Conductivity Slope</td><td>-</td><td>Conductivity slope measures the rate at which a soil's hydraulic conductivity decreases with decreasing moisture content. Regression analysis has shown it can be estimated with the following relationship:

Conductivity Slope = 0.48(% Sand) + 0.85(% Clay)

Based on this relationship the following values were used:

<table>
<tr><th>Soil Group</th><th>A</th><th>B</th><th>C</th><th>D</th></tr>
<tr><td>Conductivity Slope</td><td>48</td><td>40</td><td>53</td><td>45</td></tr>
</table>
</td></tr>
<tr><td>Tension Slope</td><td></td><td>Used for backward compatibility in the software and not used in this model</td></tr>
<tr><td>Upper Evaporation Factor</td><td>Fraction</td><td>This factor determines the fraction of available subsurface evaporation rate used in the upper subsurface zone (compared to the lower subsurface zone). A higher evaporation rate is associated with looser soils, lower water table elevations and shallow root zones. It was assumed that in all soils 80% of the available subsurface evaporation would be used in the upper zone due to the depth of the water table.

Value: 0.8</td></tr>
<tr><td>Lower Evaporative Depth</td><td>m</td><td>The depth of the lower subsurface zone which can be used for evapotranspiration should be approximate to the expected average depth of root penetration. The following values were used:

<table>
<tr><th>Soil Group</th><th>A</th><th>B</th><th>C</th><th>D</th></tr>
<tr><td>Evaporative Depth (m)</td><td>1.5</td><td>2.4</td><td>3.0</td><td>5.2</td></tr>
</table>
(Source: Shah et al 2007 from EPA 2015)</td></tr>
<tr><td>Lower Groundwater Loss Rate</td><td>mm/hr</td><td>This is the rate of percolation from the lower subsurface zone to a deep aquifer and is approximate to the rate at which the water table elevation will drop over a prolonged dry period. The saturated hydraulic conductivity of a compacted clay soil was used in all cases.

Value: 0.004</td></tr>
<tr><td>Bottom Elevation</td><td>m</td><td>The elevation of the bedrock as averaged from the Patterson 2016 report.

Value: 85</td></tr>
</table>

<table>
<tr><th>Parameter</th><th>Units</th><th>Description / Values</th></tr>
<tr><td>Unsaturated Zone Moisture</td><td></td><td>The moisture content of the unsaturated upper subsurface zone at the start of the simulation. Cannot be less than the wilting point and cannot be more that porosity. Assumed to be an approximate value between the wilting point and porosity fractions.
<table>
<tr><th>Soil Group</th><th>A</th><th>B</th><th>C</th><th>D</th></tr>
<tr><td>Evaporative Depth (m)</td><td>0.25</td><td>0.22</td><td>0.32</td><td>0.35</td></tr>
</table>
</td></tr>
</table>

JFSA
WATER RESOURCES AND ENVIRONMENTAL CONSULTANTS

Ottawa. ON
Paris. ON
Gatineau. QC
Montréal. QC
Québec. QC

Attachment B

Continuous Simulation Results

Table B1 - Yearly Precipitation

Year	Rainfall	
	(mm)	(m^3)
1967	373	100,925
1968	520.6	140,862
1969	499	135,017
1970	538.1	145,597
1971	491	132,852
1972	764.1	206,747
1973	670.1	181,313
1974	332.1	89,858
1975	497.7	134,665
1976	467.5	126,494
1977	587.6	158,990
1978	558.2	151,035
1979	753.6	203,906
1980	555	150,169
1981	840.9	227,527
1982	542.6	146,814
1983	537	145,299
1984	416.2	112,613
1985	456	123,382
1986	814	220,248
1987	602.9	163,130
1988	610.2	165,105
1989	512.8	138,751
1990	651.2	176,199
1991	520.4	140,807
1992	621.2	168,081
1993	643.5	174,115
1994	514.5	139,211
1995	443.6	120,027
1996	476.8	129,010
1997	363.6	98,381
1998	440.3	119,134
1999	424.4	114,832
2000	535.9	145,001
2001	-	-
2002	551.5	149,222
2003	554.6	150,061
2004	573.3	155,121
2005	-	-
2006	723.4	195,734
2007	550.7	149,006
Average	552.0	149,365

Notes:

Total drainage area 27.058 ha

Table B2 - Etobicoke Exfiltration System
Yearly Infiltration Volumes (m^3)

Node	MH_102	MH_103	MH_104	MH_108	MH_109	MH_110	MH_111	MH_114	MH_119	MH_120	MH_121	MH_125	MH_127	MH_128	MH_129	MH_130	MH_204	MH_208	MH_215	MH_217	MH_218	MH_222	MH_223	MH_227	Total
1967	993	1,574	576	560	388	795	404	929	959	204	1,210	1,311	675	79	898	876	1,347	1,561	936	1,881	771	1,426	814	1,040	**22,207**
1968	1,329	1,971	742	746	516	1,074	548	1,290	1,182	275	1,481	1,694	885	103	1,193	1,162	1,780	2,121	1,317	2,556	1,038	1,919	1,063	1,358	**29,343**
1969	1,444	2,088	774	722	466	1,051	451	1,484	1,257	302	1,544	1,813	933	87	1,213	1,169	2,010	2,336	1,431	3,079	1,055	2,251	994	1,389	**31,343**
1970	1,444	2,175	820	740	491	1,077	529	1,430	1,307	299	1,587	1,865	954	85	1,218	1,176	1,925	2,295	1,419	2,874	1,029	2,136	962	1,362	**31,199**
1971	1,345	1,892	716	672	435	1,015	494	1,394	1,066	292	1,323	1,670	832	62	1,068	1,041	1,750	2,206	1,371	2,805	830	2,031	802	1,242	**28,354**
1972	1,901	2,886	1,073	1,062	732	1,536	776	1,869	1,726	416	2,234	2,461	1,289	150	1,712	1,666	2,618	3,046	1,861	3,747	1,420	2,814	1,406	1,941	**42,342**
1973	1,714	2,538	943	931	670	1,346	758	1,748	1,476	383	1,946	2,175	1,134	128	1,507	1,470	2,405	2,755	1,687	3,592	1,286	2,662	1,271	1,739	**38,264**
1974	1,043	1,428	558	478	278	713	247	1,030	825	214	955	1,278	643	46	816	758	1,213	1,687	1,038	2,021	482	1,464	496	874	**20,585**
1975	1,298	1,939	728	684	476	977	518	1,311	1,112	302	1,490	1,660	853	83	1,089	1,069	1,737	2,099	1,300	2,630	833	1,933	822	1,238	**28,181**
1976	1,375	2,023	766	713	439	1,029	388	1,331	1,243	286	1,459	1,749	899	68	1,153	1,113	1,714	2,190	1,334	2,631	879	1,959	822	1,286	**28,849**
1977	1,665	2,507	930	876	569	1,253	611	1,668	1,426	354	1,937	2,136	1,126	122	1,451	1,398	2,368	2,685	1,659	3,429	1,314	2,557	1,175	1,617	**36,833**
1978	1,475	2,250	853	829	520	1,200	540	1,439	1,324	316	1,723	1,928	1,012	114	1,307	1,277	1,927	2,357	1,471	2,809	1,033	2,101	1,070	1,465	**32,340**
1979	1,634	2,685	975	994	722	1,425	822	1,609	1,613	452	2,224	2,213	1,195	170	1,600	1,567	2,371	2,590	1,586	3,333	1,428	2,555	1,344	1,779	**38,886**
1980	1,545	2,443	911	862	516	1,230	518	1,493	1,503	326	1,900	2,049	1,081	125	1,410	1,351	2,013	2,436	1,493	2,979	1,069	2,261	1,078	1,513	**34,105**
1981	2,028	2,915	1,118	1,072	742	1,583	768	2,031	1,711	416	2,069	2,548	1,313	130	1,704	1,676	2,621	3,266	2,012	3,983	1,268	2,897	1,345	1,939	**43,155**
1982	1,612	2,407	906	839	532	1,212	520	1,583	1,440	337	1,748	2,068	1,054	97	1,364	1,321	2,060	2,580	1,590	3,103	1,048	2,309	1,039	1,527	**34,296**
1983	1,635	2,392	898	815	504	1,181	474	1,602	1,457	344	1,705	2,068	1,048	90	1,347	1,317	2,133	2,629	1,609	3,221	1,122	2,421	991	1,500	**34,503**
1984	1,065	1,767	643	649	418	933	441	984	1,142	245	1,418	1,454	769	97	1,053	1,033	1,530	1,655	997	2,026	950	1,585	975	1,158	**24,987**
1985	1,042	1,759	639	679	422	962	468	1,035	1,047	234	1,495	1,442	801	125	1,080	1,058	1,520	1,664	1,028	2,146	910	1,628	963	1,182	**25,329**
1986	2,027	3,146	1,178	1,150	843	1,637	921	1,969	1,909	500	2,417	2,657	1,394	158	1,824	1,795	2,642	3,219	1,982	3,879	1,306	2,865	1,482	2,032	**44,932**
1987	1,690	2,453	925	863	573	1,261	592	1,724	1,393	371	1,750	2,124	1,086	100	1,403	1,374	2,242	2,754	1,703	3,454	1,077	2,510	1,036	1,568	**36,026**
1988	1,691	2,333	894	849	593	1,239	657	1,744	1,203	345	1,639	2,064	1,053	95	1,364	1,341	2,223	2,806	1,741	3,447	1,081	2,487	1,130	1,608	**35,627**
1989	1,444	2,122	794	737	511	1,072	535	1,444	1,304	446	1,676	1,830	928	83	1,203	1,167	1,898	2,321	1,429	2,900	960	2,122	957	1,369	**31,252**
1990	1,764	2,626	985	916	619	1,334	666	1,757	1,610	370	1,956	2,255	1,162	116	1,535	1,451	2,357	2,815	1,729	3,547	1,182	2,596	1,176	1,725	**38,249**
1991	1,594	2,250	861	799	535	1,166	507	1,570	1,308	320	1,580	1,971	998	81	1,294	1,264	2,034	2,573	1,596	3,065	966	2,226	1,013	1,459	**33,030**
1992	1,669	2,422	911	891	580	1,291	630	1,702	1,421	405	1,823	2,093	1,081	112	1,430	1,394	2,293	2,707	1,667	3,450	1,158	2,517	1,146	1,636	**36,429**
1993	1,917	2,785	1,058	993	602	1,435	539	1,893	1,618	472	2,014	2,426	1,253	124	1,631	1,594	2,449	3,082	1,912	3,728	1,211	2,746	1,239	1,800	**40,521**
1994	1,273	1,879	715	719	526	1,045	648	1,258	1,047	266	1,411	1,626	847	107	1,133	1,112	1,710	2,061	1,287	2,486	914	1,845	959	1,286	**28,160**
1995	910	1,469	530	493	380	713	447	872	917	190	1,128	1,215	612	55	797	774	1,295	1,432	871	1,788	797	1,372	703	920	**20,680**
1996	1,373	2,027	769	719	471	1,040	480	1,325	1,271	286	1,468	1,748	909	99	1,163	1,133	1,736	2,174	1,333	2,613	919	1,960	921	1,297	**29,234**
1997	1,094	1,744	639	583	326	849	282	1,083	1,078	239	1,358	1,454	761	82	992	946	1,537	1,736	1,067	2,200	890	1,678	732	1,071	**24,421**
1998	1,162	1,777	670	669	397	961	434	1,128	1,046	310	1,430	1,519	809	107	1,087	1,064	1,562	1,861	1,147	2,263	856	1,707	840	1,164	**25,970**
1999	1,090	1,708	646	638	376	913	432	1,037	1,053	234	1,314	1,449	780	107	1,037	1,000	1,397	1,715	1,052	2,009	800	1,534	834	1,088	**24,243**
2000	1,397	2,045	777	755	514	1,107	519	1,401	1,166	294	1,525	1,773	924	105	1,218	1,184	1,834	2,267	1,399	2,799	911	2,042	941	1,361	**30,258**
2001	-	-	-	-	-	-	-	-	-	-	-	-	-	-	-	-	-	-	-	-	-	-	-	-	**-**
2002	1,257	2,098	769	790	556	1,117	573	1,176	1,303	270	1,680	1,718	919	121	1,249	1,231	1,720	1,960	1,197	2,371	995	1,801	1,104	1,384	**29,359**
2003	1,431	2,219	825	795	576	1,152	596	1,398	1,357	303	1,666	1,885	983	101	1,288	1,254	1,875	2,280	1,399	2,812	1,025	2,099	1,019	1,426	**31,764**
2004	1,206	1,773	678	640	449	922	496	1,213	968	308	1,338	1,556	800	75	1,023	995	1,556	1,952	1,224	2,405	776	1,773	785	1,152	**26,063**
2005	-	-	-	-	-	-	-	-	-	-	-	-	-	-	-	-	-	-	-	-	-	-	-	-	**-**
2006	1,958	3,031	1,116	1,093	714	1,566	738	1,895	1,859	428	2,403	2,547	1,340	153	1,758	1,717	2,661	3,114	1,920	3,829	1,599	2,915	1,592	1,982	**43,928**
2007	1,537	2,265	855	785	487	1,137	502	1,547	1,337	467	1,815	1,958	997	89	1,272	1,227	2,060	2,478	1,526	3,148	1,002	2,296	914	1,417	**33,118**
Average	**1,463**	**2,200**	**825**	**790**	**525**	**1,142**	**550**	**1,446**	**1,307**	**329**	**1,663**	**1,883**	**978**	**103**	**1,279**	**1,244**	**1,952**	**2,345**	**1,444**	**2,898**	**1,031**	**2,154**	**1,024**	**1,433**	**32,009**

Table B3 - Subcatchments
Yearly Runoff Volumes (m³)

Node	Area	1967	1968	1969	1970	1971	1972	1973	1974	1975	1976	1977	1978	1979	1980	1981	1982	1983	1984	1985	1986	1987	1988	1989	1990	1991	1992	1993	1994	1995	1996	1997	1998	1999	2000	2001	2002	2003	2004	2005	2006	2007	Average
A102NE	0.1339	292	393	365	400	344	590	508	225	374	330	442	407	587	407	655	405	395	313	336	627	447	458	372	477	377	467	467	384	347	351	262	313	309	379	-	436	404	438	-	555	401	**411**
A103NE	0.1353	340	456	423	463	400	682	590	262	434	383	514	471	681	472	755	471	458	364	390	728	518	532	431	555	437	540	542	445	404	407	304	363	358	439	-	502	470	505	-	645	466	**477**
A103SW	0.0582	135	182	169	186	159	273	235	104	173	153	205	188	272	189	302	188	183	145	156	290	207	212	172	221	174	216	216	178	160	162	121	145	143	176	-	201	187	202	-	257	186	**190**
A104NE	0.1378	332	446	414	454	391	668	577	256	425	375	502	461	667	462	740	461	448	356	382	713	507	520	422	543	428	529	530	435	395	398	297	354	350	430	-	492	459	495	-	630	456	**467**
A104NW	0.0471	67	91	84	93	79	138	117	52	86	76	102	94	136	94	155	93	91	72	77	144	103	105	85	110	87	108	107	88	80	81	60	72	71	87	-	104	93	104	-	128	92	**95**
A104SE	0.0528	128	172	160	175	150	258	222	99	164	145	194	178	257	178	285	177	173	137	147	274	196	200	163	209	165	204	204	168	152	154	115	138	136	166	-	189	177	191	-	243	176	**180**
A104SW	0.0473	116	155	144	158	136	232	201	89	148	131	175	161	232	161	257	160	156	124	133	248	177	181	147	189	149	184	185	152	137	139	104	124	122	150	-	171	160	172	-	220	159	**163**
A105NE	0.0577	134	180	167	183	157	270	233	103	171	151	202	186	269	186	299	186	181	143	154	287	204	209	170	218	172	213	214	176	159	160	120	143	142	173	-	199	185	200	-	254	184	**188**
A105NW	0.1045	265	356	330	361	312	532	461	204	339	299	401	367	532	368	589	368	357	284	304	569	404	415	337	433	341	421	423	347	315	318	237	282	279	343	-	391	366	393	-	503	363	**372**
A105SE	0.0582	135	182	168	185	159	272	235	104	173	152	204	188	271	188	301	187	182	144	155	289	206	211	171	220	174	215	216	177	160	162	121	144	143	175	-	200	187	202	-	256	185	**190**
A105SW	0.1044	282	378	351	384	332	564	490	217	360	317	426	390	565	392	624	391	379	302	324	605	430	441	358	461	363	448	450	369	335	338	252	300	297	364	-	414	389	417	-	535	386	**395**
A106N1	0.0845	223	299	278	304	262	447	387	172	285	251	337	309	447	310	494	309	300	239	256	478	340	349	283	364	287	354	356	292	265	267	199	238	235	288	-	328	308	330	-	423	306	**313**
A106N2	0.0773	209	281	260	285	246	419	363	161	267	236	316	290	419	291	463	290	282	224	240	449	319	327	266	342	269	332	334	274	249	251	187	223	220	270	-	308	289	309	-	397	287	**293**
A106NE	0.0626	155	208	193	211	182	311	269	119	198	174	234	215	311	215	344	215	208	166	178	332	236	242	197	253	199	246	247	203	184	185	138	165	163	200	-	229	214	230	-	294	212	**217**
A106NW	0.0644	166	222	206	226	195	332	288	137	211	186	250	229	332	230	367	229	223	177	190	355	252	259	210	270	213	263	264	217	197	198	148	176	174	214	-	244	228	245	-	314	227	**232**
A106R1	0.0465	7	10	8	20	6	29	20	3	17	0	9	9	26	1	42	3	0	3	7	9	7	20	5	6	0	17	0	9	12	4	0	1	3	2	-	16	2	39	-	5	4	**10**
A106R2	0.1506	12	18	11	40	10	66	42	3	30	0	14	22	46	0	97	2	0	3	5	13	6	37	9	5	0	42	0	9	15	5	0	0	0	2	-	47	3	93	-	5	3	**18**
A106SE	0.073	200	268	249	272	235	400	347	154	255	225	302	277	400	278	442	277	269	214	230	429	305	313	254	327	257	317	319	262	238	240	179	213	211	259	-	294	276	295	-	379	274	**280**
A106SW	0.0666	174	233	216	237	204	348	302	134	222	196	263	241	348	242	385	241	234	186	200	373	265	272	221	284	224	276	277	228	206	208	155	185	183	225	-	256	240	258	-	330	238	**244**
A108N1	0.052	73	98	91	101	85	150	127	56	93	82	110	102	147	101	168	101	99	78	84	156	111	114	92	118	94	118	116	95	86	87	65	78	77	94	-	112	101	113	-	138	100	**103**
A108NE	0.0393	96	129	120	132	113	193	167	74	123	109	146	134	193	134	214	133	130	103	111	206	147	151	122	157	124	153	154	126	114	115	86	103	102	125	-	142	133	143	-	183	132	**135**
A108NW	0.0287	47	63	59	65	55	96	82	36	60	53	71	66	94	65	107	65	63	50	54	100	72	73	60	76	60	75	75	61	55	56	42	50	50	61	-	71	65	72	-	89	64	**66**
A108R1	0.2228	22	31	21	68	18	107	68	7	53	0	26	35	78	0	160	4	0	7	13	25	16	65	15	11	0	67	0	18	31	11	0	0	2	5	-	72	5	152	-	10	7	**31**
A108R2	0.1143	10	15	10	33	8	53	34	3	26	0	12	17	38	0	78	2	0	3	5	11	6	31	7	5	0	33	0	8	14	5	0	0	1	2	-	37	2	75	-	4	3	**15**
A108SE	0.1135	262	351	326	357	308	526	455	201	334	295	395	363	525	363	584	363	352	281	300	561	399	409	332	428	337	416	417	343	311	314	234	278	275	338	-	388	361	390	-	496	359	**367**
A108SW	0.0507	104	140	130	143	123	211	181	80	134	118	158	145	210	145	234	145	141	111	120	224	160	163	133	170	134	167	167	137	124	125	94	112	110	135	-	156	144	157	-	198	143	**147**
A109NE	0.0292	42	56	52	58	49	86	73	32	54	47	63	59	85	58	97	58	57	45	48	90	64	65	53	68	54	68	67	55	49	50	38	45	44	54	-	65	58	65	-	79	57	**59**
A109NW	0.0533	127	171	158	174	149	255	221	98	162	143	192	176	255	177	283	176	171	136	146	272	194	199	161	207	164	202	203	167	151	152	114	136	134	164	-	188	176	189	-	241	174	**178**
A109SE	0.0936	217	291	270	296	255	436	376	167	277	244	327	301	435	301	483	300	292	232	249	465	330	339	275	354	279	345	346	284	257	260	194	231	229	280	-	321	299	323	-	411	297	**304**
A110NE	0.1026	251	337	312	342	295	504	436	193	320	283	379	348	503	349	558	348	338	269	288	538	382	392	318	409	323	399	400	329	298	301	224	267	264	324	-	371	346	373	-	476	344	**352**
A110NW	0.0866	215	288	267	293	252	431	373	165	274	242	324	298	430	298	477	297	289	230	246	460	327	336	272	350	276	341	342	281	255	257	192	229	226	278	-	317	296	319	-	407	294	**301**
A110R1	0.0385	5	7	5	15	4	22	15	2	12	0	6	7	19	0	33	2	0	2	5	7	5	15	3	4	0	13	0	6	9	3	0	1	2	1	-	13	1	31	-	3	3	**7**
A110R10	0.0379	5	8	6	16	4	23	15	2	13	0	7	7	20	0	34	2	0	2	5	7	5	16	4	4	0	14	0	7	9	3	0	1	2	1	-	13	2	32	-	4	3	**8**
A110R2	0.0357	5	7	5	14	4	21	14	2	11	0	6	7	17	0	30	2	0	2	4	6	4	14	3	3	0	12	0	6	8	3	0	1	2	1	-	12	1	28	-	3	2	**7**
A110R3	0.0389	5	7	6	15	4	22	15	2	13	0	6	7	19	0	33	2	0	2	5	7	5	15	3	4	0	14	0	6	9	3	0	1	2	1	-	13	1	31	-	3	3	**7**
A110R4	0.0471	6	9	7	19	5	27	18	3	15	0	8	9	23	0	40	2	0	3	6	8	6	18	4	5	0	16	0	8	11	4	0	1	2	2	-	16	2	38	-	4	3	**9**
A110R5	0.0452	6	9	7	19	5	27	18	3	16	0	8	9	24	0	40	3	0	3	6	9	6	19	4	5	0	16	0	8	11	4	0	1	3	2	-	16	2	38	-	4	4	**9**
A110R6	0.0418	6	8	6	17	5	25	17	3	14	0	7	8	22	0	37	2	0	3	6	8	6	17	4	5	0	15	0	8	10	4	0	1	2	2	-	15	2	35	-	4	3	**8**
A110R7	0.0456	6	9	7	19	5	27	18	3	16	0	8	9	24	0	41	3	0	3	6	9	6	19	4	5	0	16	0	8	11	4	0	1	3	2	-	16	2	38	-	4	4	**9**
A110R8	0.0591	8	12	9	25	7	36	24	4	20	0	11	11	31	1	53	3	0	4	8	12	8	24	6	7	0	21	0	11	15	5	0	2	3	2	-	21	2	49	-	6	5	**12**
A110R9	0.0323	4	6	4	12	3	18	12	2	10	0	5	6	14	0	26	1	0	2	3	5	3	11	3	3	0	11	0	4	6	2	0	0	1	1	-	11	1	25	-	2	2	**6**
A110SE	0.0587	149	201	186	204	176	300	260	115	191	169	226	207	300	208	332	207	202	160	172	320	228	234	190	244	193	238	239	196	178	179	134	160	158	193	-	220	207	222	-	284	205	**210**
A110SW	0.0824	193	260	241	264	227	389	336	149	247	218	292	268	388	269	431	268	261	207	222	414	295	302	245	316	249	308	308	253	230	232	173	206	204	250	-	287	267	288	-	367	265	**271**
A111NW	0.0905	218	293	272	298	257	438	379	168	279	246	330	303	438	303	486	302	294	234	251	468	333	341	277	356	281	347	348	286	259	262	195	233	230	282	-	323	301	325	-	414	299	**306**
A111SE	0.0869	215	289	268	294	253	432	374	166	275	243	325	299	432	299	478	298	290	231	247	461	328	337	273	352	277	342	343	282	256	258	192	229	227	278	-	318	297	320	-	409	295	**302**
A112NE	0.1184	282	378	351	385	331	566	489	217	360	318	426	391	565	392	627	390	380	302	324	604	429	441	358	460	363	448	449	369	335	337	252	300	297	364	-	417	389	419	-	534	386	**395**
A112NW	0.0531	132	177	164	179	155	264	228	101	168	148	199	182	264	183	292	182	177	141	151	282	201	206	167	215	169	209	210	172	156	158	118	140	139	170	-	194	182	195	-	250	180	**185**
A112R3	0.0559	9	13	10	26	8	37	25	4	21	0	11	12	34	1	53	4	0	5	9	13	9	25	6	8	1	22	0	13	16	6	1	3	5	2	-	20	3	49	-	7	6	**13**
A112R4	0.0976	13	18	14	39	10	56	38	6	31	0	16	18	47	1	83	4	0	5	12	17	12	38	9	9	0	34	0	15	22	8	0	2	4	3	-	33	4	78	-	8	7	**18**
A112SE	0.1192	295	397	368	403	347	593	513	227	377	333	446	410	592	410	656	409	398	316	339	633	450	462	375	482	380	470	471	387	351	354	264	315	311	382	-	436	408	439	-	560	405	**414**
A112SW	0.0441	115	155	143	157	135	231	200	89	147	130	174	160	231	160	255	160	155	123	132	247	176	180	146	188	148	183	184	151	137	138	103	123	121	149	-	170	159	171	-	218	158	**162**
A112WK	0.0389	41	56	52	58	49	88	73	32	54	47	63	59	85	58	99	58	56	44	48	89	64	65	53	68	54	68	66	55	49	50	37	45	44	54	-	66	57	67	-	79	57	**59**
A113R1	0.1345	13	19	13	42	11	66	42	5	33	0	16	21	49	0	97	3	0	4	9	16	10	40	9	7	0	41	0	12	19	7	0	0	1	3	-	44	3	92	-	7	5	**20**
A113R2	0.0836	11	16	12	33	9	48	32	5	27	0	14	16	41	1	71	4	0	5	10	15	10	32	7	8	0	29	0	13	19	7	0	1	4	3	-	29	3	67	-	7	6	**16**
A114NE	0.0293	76	102	94	103	89	152	131	58	97	85	114	105	152	105	168	105	102	81	87	162	116	118	96	124	97	120	121	99	90	91	68	81	80	98	-	112	105	112	-	144	104	**106**
A114R1	0.0675	11	15	12	31	9	44	30	5	26	0	14	14	40	2	64	5	0	6	11	15	11	30	8	9	1	26	0	15	19	7	1	3	6	3	-	24	3	59	-	8	7	**15**
A114R2	0.0534	6	9	7	20	5	29	19	3	16	0	8	9	23	0	43	2	0	3	5	8	6	19	4	4	0	18	0	7	10	4	0	0	1	2	-	18	2	41	-	4	3	**9**
A114R3	0.0736	10	14	10	29	8	42	28	4	24	0	12	14	36	1	62	3	0	4	9	13	9	28	7	7	0	26	0	12	16	6	0	1	3	2	-	25	3	59	-	6	5	**14**
A114R4	0.1447	21	30	23	61	17	89	60	9	51	0	26	29	78	2	130	8	0	10	20	29	21	60	14	17	1	53	0	27	36	13	1	4	9	5	-	51	6	121	-	15	12	**30**
A114SE	0.1052	227	305	283	311	267	459	394	175	290	256	343	316	456	316	508	315	307	242	261	486	347	355	288	370	292	362	362	298	269	272	203	243	240	294	-	339	314	341	-	431	311	**319**
A114SW	0.1843	438	588	545	598	515	880	761	337	560	494	662	608	879	609	976	607	590	469	503	939	668	685	556	715	564	697	699	574	521	525	391	466	462	566	-	649	605	652	-	831	600	**615**
A115NE	0.08	188	252	234	256	221	377	326	145	240	212	284	261	377	261	418	260	253	201	216	402	286	294	238	306	242	299	299	246	223	225	168	200	198	243	-	278	259	280	-	356	257	**264**
A115NW	0.0502	125	168	155	170	147	250	216	96	159	141	189	173	250	173	277	173	168	133	143	267	190	195	158	203	161	198	199	163	148	149	112	133	132	161	-	184	172	185	-	237	171	**175**
A115R1	0.0441	5	8	6	16	4	24	16	2	13	0	7	8	19	0	36	1	0	2	4	7	5	16	4	4	0	15	0	6	9	3	0	0	1	1	-	15	1	34	-	3	3	**8**
A115R2	0.0429	6	8	6	17	5	25	16	2	14	0	7	8	21	0	36	2	0	2	5	8	5	17	4	4	0	15	0	7	10	3	0	1	2	1	-	15	2	34	-	4	3	**8**
A115R3	0.0346	4	6	5	14	4	20	13	2	11	0	6	6	17	0	29	1	0	2	4	6	4	13	3	3	0	12	0	5	8	3	0	1	1	1	-	12	1	28	-	3	2	**6**
A115R4	0.0355	5	7	5	15	4	21	14	2	12	0	6	7	19	0	32	2	0	2	5	7	5	15	3	4	0	13	0	6	9	3	0	1	2	1	-	12	1	30	-	4	3	**7**
A115R5	0.05	7	10	8	21	6	30	20	3	17	0	9	10	26	1	45	3	0	3	7	10	7	20	5	6	0	18	0	9	12	4	0	1	3	2	-	17	2	42	-	5	4	**10**
A115R6	0.0405	6	8	6	17	5	24	16	3	14	0	7	8	21	0	36	2	0	3	5	8	6	17	4	4	0	15	0	7	10	4	0	1	2	1	-	14	2	34	-	4	3	**8**
A115SE	0.0218	33	44	41	45	38	67	57	25	42	37	49	46	66	46	75	45	44	35	38	70	50	51	42	53	42	53	52	43	39	39	29	35	35	42	-	50	45	51	-	62	45	**46**
A115SW	0.0392	57	78	72	80	67	118	100	44	74	65	87	81	116	80	132	80	78	61	66	123	88	90	73	94	74	93	92	75	68	69	52	62	61	75	-	88	79	89	-	109	79	**81**
A115W1	0.0351	73	99	92	101	86	148	128	57	94	83	111	102	147	102	165	102	99	78	84	157	112	115	93	120	95	117	117	96	87	88	66	79	78	95	-	110	101	110	-	139	101	**103**
A116E1	0.037	75	101	93	103	88	152	130	58	96	85	113	104	151	104	168	104	101	80	86	160	114	117	95	122	96	120	120	98	89	90	67	80	79	97	-	112	104	113	-	142	103	**105**
A116NE	0.081	190	256	237	260	224	383	331	147	243	215	288	264	382	265	424	264	257	204	219	408	291	298	242	311	245	303	304	250	226	228	170	203	201	246	-	282	263	284	-	361	261	**267**
A116NW	0.0753	182	244	226	248	214	365	315	140	232	205	275	252	364	252	404	252	245	194	209	389	277	284	231	296	234	289	290	238	216	218	162	194	192	235	-	269	251	270	-	344	249	**255**
A116R1	0.1084	9	12	8	28	7	47	29	2	22	0	10	15	32	0	70	1	0	2	3	9	4	26	6	3	0	30	0	6	10	4	0	0	0	1	-	34	2	67	-	3	2	**13**
A116R2	0.1022	6	9	5	22	4	40	24	0	15	0	6	13	24	0	56	0	0	1	1	6	1	19	4	1	0	25	0	3	4	2	0	0	0	1	-	30	1	54	-	2	1	**10**
A116R3	0.0796	9	14	10	30	8	44	29	4	24	0	12	14	35	0	64	3	0	4	8	13	9	29	7	7	0	27	0	11	16	6	0	1	2	2	-	27	3	61	-	6	5	**14**
A116R4	0.059	7	10	7	22	6	32	21	3	17	0	9	10	26	0	47	2	0	3	6	9	6	21	5	5	0	20	0	8	11	4	0	0	2	2	-	20	2	45	-	4	3	**10**
A116R5	0.069	7	11	7	23	6	35	23	3	18	0	9	11	26	0	52	2	0	3	5	9	6	22	5	4	0	22	0	7	11	4	0	0	1	2	-	23	2	49	-	4	3	**11**
A116R6	0.066	9	13	10	28	8	40	27	4	23	0	12	13	35	1	59	4	0	4	9	13	9	27	6	7	0	24	0	12	16	6	0	2	4	2	-	23	3	55	-	7	5	**13**
A116R7	0.062	9	13	10	26	7	38	25	4	21	0	11	12	33	1	55	3	0	4	8	12	9	26	6	7	0	22	0	11	15	6	0	2	4	2	-	22	3	52	-	6	5	**13**
A116SE	0.0791	168	226	209	230	197	339	291	129	215	189	254	233	337	233	376	233	226	179	193	360	256	262	213	274	216	268	268	220	199	201	150	179	177	217	-	250	232	252	-	318	230	**236**
A116SW	0.0762	204	273	254	277	240	408	354	157	260	230	308	282	408	283	451	282	274	218	234	437	311	319	259	333	262	323	325	267	242	244	182	217	215	263	-	300	281	301	-	386	279	**286**
A117NE	0.0839	200	268	249	273	235	401	347	154	255	225	302	277	400	277	445	277	269	214	229	428	304	312	253	326	257	318	318	261	237	239	178	213	210	258	-	296	276	297	-	379	274	**280**
A117NW	0.0821	198	266	247	270	233	398	344	152	253	223	299	275	397	275	441	274	267	212	227	424	302	310	251	323	255	315	316	259	235	237	177	211	209	256	-	293	273	295	-	376	271	**278**
A117R1	0.085	8	12	8	27	7	42	27	3	21	0	10	14	31	0	61	2	0	3	5	10	6	25	6	5	0	26	0	7	12	4	0	0	1	2	-	28	2	58	-	4	3	**12**
A117R2	0.062	8	12	9	24	7	36	24	4	20	0	10	11	30	0	53	3	0	3	7	11	8	24	5	6	0	22	0	10	14	5

Table B3 - Subcatchments
Yearly Runoff Volumes (m³)

Node	Area	1967	1968	1969	1970	1971	1972	1973	1974	1975	1976	1977	1978	1979	1980	1981	1982	1983	1984	1985	1986	1987	1988	1989	1990	1991	1992	1993	1994	1995	1996	1997	1998	1999	2000	2001	2002	2003	2004	2005	2006	2007	Average
A121R2	0.072	8	12	9	26	7	39	26	4	21	0	11	13	31	0	58	2	0	3	7	11	8	26	6	6	0	24	0	9	14	5	0	1	2	2	-	24	2	55	-	5	4	**12**
A121R3	0.044	5	7	5	15	4	23	15	2	12	0	6	7	17	0	34	1	0	2	4	6	4	14	3	3	0	14	0	5	7	3	0	0	1	1	-	15	1	32	-	3	2	**7**
A121R4	0.059	6	9	7	20	5	31	20	2	16	0	8	10	23	0	44	2	0	2	4	7	5	19	5	4	0	19	0	6	9	3	0	0	1	2	-	20	2	42	-	3	3	**9**
A121S1	0.154	361	483	448	492	424	724	626	277	460	406	544	500	723	500	803	499	485	386	414	772	549	564	457	589	464	573	575	472	429	432	322	383	379	465	-	534	497	537	-	683	494	**506**
A121SE	0.122	226	305	283	312	266	461	395	175	290	256	343	317	457	316	513	314	307	242	261	486	347	355	288	370	292	363	362	298	269	272	203	243	240	294	-	342	314	344	-	431	311	**320**
A121SW	0.077	181	243	225	247	212	363	314	139	231	204	273	251	362	251	403	250	244	193	208	387	276	283	229	295	233	288	288	237	215	217	162	193	191	234	-	268	250	269	-	343	248	**254**
A122NE	0.1276	295	395	366	402	346	592	512	226	376	331	445	408	591	409	657	408	396	316	338	631	448	461	374	481	379	468	469	386	350	353	263	313	310	380	-	437	406	439	-	558	403	**413**
A122R1	0.0732	4	7	4	16	3	29	17	0	11	0	5	9	17	0	40	0	0	1	0	4	1	14	3	1	0	18	0	2	3	1	0	0	0	0	-	22	1	39	-	2	1	**7**
A122R2	0.2135	12	19	11	46	9	82	49	0	32	0	13	26	50	0	116	0	0	2	1	12	3	40	9	2	0	51	0	7	8	4	0	0	0	1	-	63	2	112	-	4	2	**20**
A124NE	0.0469	101	135	126	138	119	203	175	78	129	114	152	140	202	140	226	140	136	108	116	216	154	158	128	165	130	161	161	132	120	121	90	108	106	130	-	150	139	151	-	191	138	**142**
A124NW	0.131	312	419	389	426	367	627	542	240	399	352	472	433	626	434	695	432	421	334	359	669	476	488	396	509	402	497	498	409	370	374	279	333	329	404	-	462	431	465	-	592	428	**438**
A124R1	0.0918	11	16	12	34	9	50	33	5	27	0	14	16	40	0	74	3	0	4	9	14	10	33	8	8	0	31	0	12	18	6	0	1	3	3	-	31	3	70	-	7	5	**16**
A124R2	0.136	15	22	15	47	12	71	46	6	37	0	18	23	54	0	104	4	0	6	11	19	12	45	10	9	0	43	0	15	23	8	0	1	2	4	-	45	4	99	-	8	6	**22**
A124SE	0.0469	119	160	148	163	140	239	207	92	152	134	180	165	239	166	265	165	161	128	137	256	182	187	151	195	154	189	190	156	142	143	107	127	126	154	-	176	165	177	-	226	163	**167**
A124SW	0.136	351	471	437	478	412	703	609	270	448	395	530	486	702	487	777	486	472	375	403	752	535	548	445	572	451	557	559	459	416	420	313	374	370	453	-	517	484	520	-	665	481	**492**
A125E1	0.0575	90	121	113	125	106	185	157	69	116	102	136	126	182	125	206	125	122	96	103	193	138	141	114	147	116	145	144	118	106	108	81	97	95	117	-	138	124	139	-	171	124	**127**
A125NE	0.0478	115	155	144	158	136	232	201	89	148	130	175	160	232	161	257	160	156	124	133	248	176	181	147	189	149	184	184	151	137	138	103	123	122	150	-	171	160	172	-	219	158	**162**
A125NW	0.0931	234	314	291	319	275	469	406	180	298	263	353	324	468	325	519	324	315	250	268	501	356	366	297	382	301	371	373	306	278	280	209	249	246	302	-	345	323	347	-	443	320	**328**
A125R1	0.1047	12	18	13	39	10	57	38	5	31	0	16	18	46	0	84	3	0	5	11	16	11	37	9	9	0	35	0	14	21	7	0	1	3	3	-	35	3	80	-	8	6	**18**
A125R2	0.1093	13	19	14	40	11	59	39	5	32	0	16	19	48	0	88	4	0	5	11	17	12	39	9	9	0	36	0	14	21	8	0	1	3	3	-	37	4	83	-	8	6	**19**
A125SE	0.0476	124	167	155	170	146	249	216	96	159	140	188	173	249	173	276	172	168	133	143	267	190	195	158	203	160	198	199	163	148	149	111	133	131	161	-	183	172	184	-	236	171	**175**
A125SW	0.0931	246	330	306	335	289	492	427	189	314	277	372	341	492	342	545	341	331	263	282	527	375	385	312	401	317	390	392	322	292	295	220	262	259	318	-	362	339	364	-	466	337	**345**
A126E1	0.0331	88	118	109	119	103	175	152	67	112	99	132	121	175	122	194	121	118	94	101	188	134	137	111	143	113	139	140	115	104	105	78	93	92	113	-	129	121	130	-	166	120	**123**
A126NE	0.0333	51	69	64	71	60	105	89	39	65	58	77	72	103	71	117	71	69	54	59	109	78	80	65	83	66	82	81	67	60	61	46	55	54	66	-	78	71	79	-	97	70	**72**
A126NW	0.0258	39	52	48	54	45	80	67	30	50	44	58	54	78	54	89	54	52	41	44	83	59	61	49	63	50	62	62	51	46	46	35	42	41	50	-	59	53	60	-	73	53	**55**
A126R1	0.0977	11	16	11	33	9	51	33	4	27	0	13	16	39	0	75	3	0	4	8	13	9	32	7	7	0	31	0	10	16	6	0	0	2	3	-	32	3	71	-	6	5	**16**
A126SE	0.032	64	86	80	88	75	130	111	49	82	72	97	89	128	89	144	88	86	68	73	137	98	100	81	104	82	102	102	84	76	77	57	69	68	83	-	96	88	96	-	121	88	**90**
A126SW	0.0259	50	67	62	69	59	101	87	39	64	56	76	70	100	70	113	69	68	53	57	107	76	78	63	81	64	80	80	66	59	60	45	54	53	65	-	75	69	76	-	95	69	**70**
A126W1	0.0767	195	262	243	266	230	392	339	150	250	220	295	271	391	272	433	271	263	209	224	419	298	305	248	319	251	311	312	256	232	234	175	208	206	253	-	288	270	290	-	371	268	**274**
A129NE	0.1715	408	547	507	556	479	819	708	314	521	459	616	566	818	566	908	565	549	437	468	874	621	638	517	666	525	648	650	534	484	488	364	434	429	527	-	604	563	607	-	773	558	**572**
A129NW	0.0657	158	213	197	216	186	318	275	122	202	179	240	220	318	220	353	220	214	170	182	340	242	248	201	259	204	252	253	208	188	190	142	169	167	205	-	234	219	236	-	301	217	**222**
A129R1	0.123	15	21	16	45	12	67	44	6	37	0	18	22	54	1	99	4	0	6	12	19	13	44	10	10	0	41	0	16	24	9	0	1	3	4	-	42	4	94	-	9	7	**21**
A129R2	0.1272	14	20	14	43	11	65	43	5	34	0	17	21	50	0	97	3	0	5	11	17	11	41	10	9	0	40	0	13	21	8	0	0	2	3	-	42	4	92	-	8	6	**20**
A129SE	0.097	187	252	233	257	220	379	325	144	239	211	283	261	376	260	422	259	253	200	215	400	286	292	237	305	241	299	298	245	221	224	168	200	198	242	-	281	258	283	-	355	256	**263**
A129SW	0.0642	155	208	193	211	182	311	269	119	198	175	234	215	310	215	345	215	209	166	178	332	236	242	197	253	199	246	247	203	184	186	138	165	163	200	-	229	214	230	-	294	212	**217**
A130NE	0.15	372	499	463	507	437	746	645	286	475	419	562	516	745	516	826	515	501	398	427	797	566	581	472	607	478	591	593	487	442	445	332	396	392	480	-	549	513	552	-	705	509	**522**
A130NW	0.047	112	151	140	153	132	226	195	86	143	127	170	156	225	156	250	155	151	120	129	240	171	175	142	183	144	179	179	147	133	134	100	120	118	145	-	166	155	167	-	213	154	**158**
A130R1	0.175	19	28	20	60	16	91	59	7	47	0	23	29	70	0	134	5	0	7	14	24	16	57	13	12	0	56	0	19	29	11	0	1	3	5	-	58	5	127	-	11	8	**28**
A130SE	0.147	345	463	430	471	406	693	599	266	441	389	521	479	692	480	769	478	465	369	396	739	526	540	438	563	444	549	550	452	410	413	308	368	364	446	-	511	477	514	-	654	473	**484**
A130SW	0.055	136	183	170	186	160	274	237	105	174	154	206	189	274	190	303	189	184	146	157	293	208	214	173	223	176	217	218	179	162	164	122	146	144	177	-	202	189	203	-	259	187	**192**
A132N1	0.029	43	59	54	60	51	89	76	34	56	49	66	61	88	61	100	60	59	46	50	93	67	68	55	71	56	70	69	57	51	52	39	47	46	56	-	67	60	67	-	83	60	**61**
A132NE	0.028	50	68	63	69	59	102	87	39	64	57	76	70	101	70	114	70	68	54	58	108	77	79	64	82	65	81	80	66	60	60	45	54	53	65	-	76	70	77	-	95	69	**71**
A132NW	0.033	86	116	108	118	102	173	150	67	110	97	131	120	173	120	191	120	117	92	99	185	132	135	110	141	111	137	138	113	102	104	77	92	91	112	-	127	119	128	-	164	118	**121**
A132R1	0.088	10	14	10	30	8	46	30	4	24	0	12	15	35	0	67	2	0	4	7	12	8	29	7	6	0	28	0	9	15	5	0	0	1	2	-	29	3	64	-	5	4	**14**
A132R2	0.1119	12	18	12	38	10	58	38	5	30	0	15	19	44	0	85	3	0	4	9	15	10	36	8	8	0	36	0	12	19	7	0	0	2	3	-	37	3	81	-	7	5	**18**
A132R3	0.1145	13	20	14	42	11	62	41	6	34	0	17	20	50	0	92	4	0	5	11	18	12	41	9	9	0	38	0	15	22	8	0	1	3	3	-	39	4	87	-	8	6	**20**
A132R4	0.101	12	17	13	37	10	55	36	5	30	0	15	18	44	0	81	3	0	5	10	16	11	36	8	8	0	34	0	13	20	7	0	1	3	3	-	34	3	77	-	7	6	**17**
A132SE	0.033	62	84	78	86	73	127	109	48	80	71	95	87	126	87	141	87	85	67	72	134	96	98	79	102	81	100	100	82	74	75	56	67	66	81	-	94	86	95	-	119	86	**88**
A132SW	0.048	111	149	138	152	131	223	193	86	142	125	168	154	223	154	248	154	150	119	128	238	169	174	141	181	143	177	177	146	132	133	99	118	117	144	-	165	153	166	-	211	152	**156**
A133NE	0.0433	53	72	67	75	63	111	93	41	69	60	81	75	108	74	125	74	72	57	61	114	82	84	68	87	69	87	85	70	63	64	48	58	57	69	-	84	74	84	-	101	73	**76**
A133NW	0.0948	117	158	146	163	137	243	204	90	150	132	177	165	238	163	274	162	159	125	134	250	179	183	149	190	151	190	187	154	138	140	105	126	124	152	-	183	162	185	-	222	161	**166**
A133SE	0.06	52	70	65	73	61	110	91	40	67	59	79	74	107	72	127	72	71	55	60	111	80	81	66	85	67	85	83	68	62	62	47	56	55	68	-	85	72	85	-	99	71	**74**
A133SW	0.132	114	155	143	161	134	243	201	88	147	129	173	162	234	159	280	159	155	122	131	245	175	179	146	186	147	188	183	150	135	137	103	123	122	149	-	187	158	188	-	217	157	**163**
A133W1	0.0432	53	72	67	74	63	111	93	41	69	60	81	75	108	74	125	74	72	57	61	114	82	83	68	87	69	87	85	70	63	64	48	57	57	69	-	84	74	84	-	101	73	**76**
A133W2	0.06	52	70	65	73	61	110	91	40	67	59	79	74	107	72	127	72	71	55	60	111	80	81	66	85	67	85	83	68	62	62	47	56	55	68	-	85	72	85	-	99	71	**74**
A133W3	0.0616	86	116	108	120	101	178	151	67	111	98	130	122	175	120	200	120	117	92	99	185	132	135	110	140	111	140	138	113	102	104	78	93	92	112	-	133	119	134	-	164	118	**122**
A133W4	0.088	88	119	110	123	103	185	154	68	113	100	133	124	180	123	211	122	119	94	101	189	135	138	112	143	113	144	141	116	104	106	79	95	93	114	-	141	122	142	-	167	121	**125**
A134NE	0.047	34	47	43	49	40	74	61	27	44	39	52	49	71	48	86	48	47	37	40	74	53	54	44	56	44	57	55	45	41	41	31	37	37	45	-	58	48	58	-	65	47	**49**
A134NW	0.126	117	159	147	165	138	248	206	91	151	133	178	166	240	164	285	163	159	125	135	252	180	184	150	191	152	193	188	155	139	141	106	127	125	153	-	191	163	191	-	223	162	**168**
A134SE	0.025	36	48	45	50	42	74	63	28	46	41	54	50	73	50	83	50	49	38	41	77	55	56	46	58	46	58	57	47	42	43	32	39	38	47	-	55	50	56	-	68	49	**51**
A134SW	0.115	115	156	144	162	135	242	202	89	148	130	174	163	235	160	276	159	156	123	132	246	176	180	146	187	148	188	184	151	136	138	103	124	122	149	-	185	159	186	-	218	158	**164**
A135R1	0.023	3	4	3	9	2	13	8	1	7	0	3	4	10	0	19	1	0	1	2	4	2	8	2	2	0	8	0	3	5	2	0	0	1	1	-	8	1	18	-	2	1	**4**
A136NE	0.031	57	76	71	78	67	115	99	44	73	64	86	79	114	79	128	79	77	61	65	121	87	89	72	92	73	91	91	74	67	68	51	61	60	74	-	86	78	86	-	108	78	**80**
A136NE1	0.024	43	58	54	60	51	88	75	33	55	49	65	60	87	60	98	60	59	46	50	93	66	68	55	70	56	69	69	57	51	52	39	46	46	56	-	65	60	66	-	82	59	**61**
A136NW	0.039	99	134	124	136	117	199	173	77	127	112	150	138	199	138	221	138	134	106	114	213	152	156	126	162	128	158	159	130	118	119	89	106	105	129	-	147	137	148	-	189	136	**140**
A136NW1	0.025	45	61	56	62	53	92	78	35	58	51	68	63	91	63	102	62	61	48	52	96	69	70	57	73	58	72	72	59	53	54	40	48	48	58	-	68	62	68	-	85	62	**63**
A136NW2	0.033	84	113	105	115	99	169	146	65	108	95	127	117	169	117	187	117	114	90	97	181	129	132	107	137	109	134	135	111	100	101	75	90	89	109	-	124	117	125	-	160	116	**118**
A136R1	0.034	5	7	6	15	4	21	14	2	12	0	6	7	19	0	31	2	0	2	5	7	5	14	3	4	0	13	0	7	9	3	0	1	2	1	-	12	1	29	-	4	3	**7**
A136SE	0.028	42	57	52	58	49	86	73	32	54	47	63	59	85	58	97	58	57	45	48	90	64	66	53	68	54	68	67	55	50	50	38	45	45	54	-	65	58	65	-	80	58	**59**
A201NE	0.1387	321	431	400	438	377	645	558	247	410	362	485	446	644	446	716	445	433	344	369	688	489	502	407	524	413	511	512	420	381	385	287	342	338	415	-	476	443	479	-	609	440	**451**
A201S1	0.098	249	335	310	340	293	500	433	192	318	281	377	345	499	346	553	345	336	267	286	534	380	390	316	407	321	396	397	326	296	299	223	265	263	322	-	368	344	370	-	473	342	**350**
A201SW	0.133	334	448	416	455	393	670	580	257	426	376	505	463	669	464	741	463	450	358	383	716	509	522	424	545	430	531	532	437	397	400	298	356	352	432	-	493	461	495	-	633	458	**468**
A203NE	0.103	238	318	295	324	279	477	413	182	303	267	358	329	476	329	529	329	319	254	272	509	361	371	301	388	306	377	378	311	282	284	212	252	249	306	-	352	327	353	-	450	325	**333**
A203NW	0.098	217	292	271	298	256	439	378	168	278	246	329	303	437	303	486	301	294	233	250	466	332	340	276	355	280	347	347	285	258	261	195	233	230	282	-	324	301	326	-	413	298	**306**
A203R1	0.116	5	9	5	21	3	41	23	0	14	0	5	13	23	0	57	0	0	1	0	5	0	18	3	0	0	25	0	2	1	1	0	0	0	0	-	33	0	54	-	2	0	**9**
A203R2	0.088	6	9	6	22	5	37	23	1	16	0	7	12	25	0	54	1	0	2	2	7	3	20	5	2	0	23	0	5	7	3	0	0	0	1	-	27	1	52	-	2	1	**10**
A203R3	0.111	12	18	12	38	10	57	37	5	30	0	15	19	44	0	85	3	0	4	9	15	10	36	8	8	0	35	0	12	19	7	0	0	2	3	-	37	3	80	-	7	5	**17**
A204E1	0.1535	370	498	461	506	436	744	643	285	473	418	560	514	743	515	824	513	499	397	426	794	565	580	470	605	477	589	591	485	440	444	331	395	391	479	-	548	512	551	-	703	508	**520**
A204E2	0.1536	401	538	499	546	471	803	696	309	512	452	606	556	803	557	888	556	540	429	461	859	611	627	509	655	516	637	639	525	476	480	358	427	423	518	-	590	554	594	-	760	550	**562**
A204NE	0.096	250	336	312	341	294	502	435	193	320	282	378	347	502	348	555	347	337	268	288	537	382	392	318	409	322	398	399	328	298	300	224	267	264	324	-	369	346	371	-	475	343	**351**
A204NW	0.107	276	370	344	376	324	553	479	212	352	311	417	383	553	384	612	382	372	295	317	591	422	432	350	450	355	438	440	362	328	331	247	294	291	357	-	407	381	409	-	523	378	**387**
A204R1	0.136	15	22	15	47	12	71	46	6	37	0	18	23	54	0	104	4	0	6	11	19	12	45	10	9	0	43	0	15	23	8	0	1	2	4	-	45	4	99	-	8	6	**22**
A204R2	0.0665	8	11	8	24	6	36	24	3	20	0	10	12	29	0	53	2	0	3	7	10	7	24	5	5	0	22	0	9	13	5	0	1	2	2	-	22	2	50	-	5	4	**11**
A204R3	0.1353	16	23	17	50	13	74	49	7	40	0	20	24	59	1	109	4	0	6	13	21	14	48	11	11	0	45	0	17	26	10	0	1	4	4	-	46	4	103	-	10	8	**23**
A204R4	0.0808	10	15	11	32	9	46	31	5	26	0	13	15	39	1	69	3	0	5	10	14	10	31	7	8	0	28	0	13	18	7	0	1	3	3	-	28	3	64	-	7	6	**15**
A204R5	0.0731	8	12	8	25	7	38	25	3	20	0	10	12	29	0	56	2	0	3	6	10	7	24	6	5	0	23	0	8	12	4	0	0	1	2	-	24	2	53	-	4	3	**12**
A204SE	0.096	235	315	292	320	276	471	408	181	300	265	355	326	471	326	522	325	316	251	270	503	358	367	298	383	302	373	374	307	279	281	210	250	247	303	-	347	324	349	-	445	322	**329**
A205SE	0.109	260	349	323	354	305	522	451	200	332	293	392	360	521	361	578	360	350	278	298	556	396	406	330	424	334	413	414	340	308	311	232	277	274	336	-	384	359	387	-	493

Table B3 - Subcatchments
Yearly Runoff Volumes (m³)

Node	Area	1967	1968	1969	1970	1971	1972	1973	1974	1975	1976	1977	1978	1979	1980	1981	1982	1983	1984	1985	1986	1987	1988	1989	1990	1991	1992	1993	1994	1995	1996	1997	1998	1999	2000	2001	2002	2003	2004	2005	2006	2007	Average
A211R1	0.0326	4	5	4	11	3	17	11	1	9	0	4	6	13	0	25	1	0	1	3	5	3	11	3	2	0	11	0	4	6	2	0	0	1	1	-	11	1	24	-	2	2	5
A211R2	0.1526	15	22	15	48	12	74	48	5	37	0	18	24	55	0	110	3	0	5	10	18	11	45	11	8	0	46	0	13	22	8	0	0	2	3	-	50	4	105	-	7	5	22
A211R3	0.08025	2	5	3	13	1	26	14	0	7	0	2	8	14	0	36	0	0	0	0	3	0	10	2	0	0	16	0	1	0	0	0	0	0	0	-	22	0	33	-	1	0	6
A213NE	0.1207	287	385	357	391	337	576	498	221	366	323	433	398	575	399	639	397	386	307	329	615	437	449	364	468	369	456	457	376	341	344	256	305	302	371	-	425	396	427	-	544	393	403
A214NE	0.1165	289	387	359	393	339	579	501	222	369	325	436	400	578	401	641	400	389	309	331	618	440	451	366	471	372	459	460	378	343	346	258	307	304	373	-	426	398	428	-	547	395	405
A214NW	0.119	291	391	362	397	342	584	505	224	372	328	440	404	583	404	647	403	392	312	334	624	443	455	369	475	375	463	464	381	346	349	260	310	307	376	-	430	402	432	-	552	399	408
A214SE	0.0937	174	235	218	240	205	355	303	134	223	197	264	243	351	243	394	242	236	186	200	374	267	273	222	284	225	279	278	229	207	209	156	187	185	226	-	263	241	265	-	331	239	246
A214SW	0.1075	256	343	319	349	301	514	444	197	327	288	387	355	513	356	570	354	345	274	294	548	390	400	325	418	329	407	408	335	304	306	229	273	270	331	-	379	353	381	-	485	351	359
A215NE	0.0554	83	112	104	115	98	171	145	64	107	94	126	117	168	116	191	115	113	89	95	178	127	130	106	135	107	134	133	109	98	100	75	89	88	108	-	128	115	129	-	158	114	117
A215NW	0.0554	83	112	104	115	98	171	145	64	107	94	126	117	168	116	191	115	113	89	95	178	127	130	106	135	107	134	133	109	98	100	75	89	88	108	-	128	115	129	-	158	114	117
A215SE	0.0271	65	87	81	88	76	130	112	50	83	73	98	90	130	90	144	90	87	69	74	139	99	101	82	106	83	103	103	85	77	78	58	69	68	84	-	96	89	96	-	123	89	91
A215SW	0.063	148	199	184	202	174	298	257	114	189	167	224	206	297	206	330	205	200	158	170	317	226	232	188	242	191	236	236	194	176	177	132	158	156	192	-	219	205	221	-	281	203	208
A216E1	0.0308	46	62	58	64	54	95	80	36	59	52	70	65	93	64	106	64	63	49	53	99	71	72	59	75	59	74	74	61	55	55	41	50	49	60	-	71	64	71	-	88	63	65
A216NE	0.0918	222	298	276	303	261	445	385	171	283	250	335	308	444	308	493	307	299	237	255	475	338	347	281	362	285	353	354	291	263	266	198	237	234	287	-	328	306	330	-	421	304	311
A216NW	0.0893	218	293	272	298	257	438	379	168	279	246	330	303	438	303	485	303	294	234	251	468	333	341	277	356	281	347	348	286	259	262	195	233	230	282	-	323	301	324	-	414	299	306
A216R1	0.048	5	7	5	15	4	23	15	2	12	0	6	8	17	0	35	1	0	2	3	6	3	14	3	3	0	15	0	4	7	2	0	0	0	1	-	16	1	33	-	2	2	7
A216R2	0.0407	4	6	4	13	3	20	13	1	10	0	5	6	15	0	29	1	0	1	3	5	3	12	3	2	0	12	0	4	6	2	0	0	0	1	-	13	1	28	-	2	1	6
A216R3	0.0597	8	12	9	24	7	35	24	4	20	0	10	11	31	1	53	3	0	4	8	12	8	24	6	6	0	21	0	10	14	5	0	1	3	2	-	21	2	49	-	6	5	12
A216R4	0.0548	8	11	8	22	6	32	22	3	18	0	10	10	28	1	49	3	0	3	7	11	8	22	5	6	0	20	0	10	13	5	0	1	3	2	-	19	2	45	-	5	4	11
A216SE	0.0888	229	308	285	312	269	459	398	176	293	258	346	318	459	318	508	317	309	245	263	491	349	358	291	374	295	364	365	300	272	274	205	244	242	296	-	338	316	340	-	435	314	321
A216SW	0.0924	241	323	300	328	283	483	418	185	308	272	364	334	483	335	534	334	325	258	277	517	367	377	306	394	310	383	384	316	286	289	215	257	254	312	-	355	333	357	-	457	330	338
A217NE	0.1516	366	491	455	499	430	734	635	281	467	412	553	507	733	508	814	507	493	392	420	784	558	572	464	597	471	582	583	479	434	438	327	390	385	473	-	541	505	544	-	694	501	513
A217NW	0.0784	189	254	235	258	222	380	328	146	242	213	286	262	379	263	421	262	255	203	217	405	288	296	240	309	243	301	302	248	225	227	169	202	199	245	-	280	261	281	-	359	259	265
A217R1	0.0605	6	9	6	19	5	30	19	2	15	0	7	10	22	0	44	1	0	2	4	7	4	18	4	3	0	18	0	5	9	3	0	0	1	1	-	20	2	42	-	3	2	9
A217R2	0.068	7	11	7	23	6	35	23	3	18	0	9	11	27	0	52	2	0	3	5	9	6	22	5	5	0	22	0	7	11	4	0	0	1	2	-	22	2	49	-	4	3	11
A217R3	0.0677	7	11	7	23	6	35	23	3	18	0	9	11	26	0	51	2	0	3	5	9	6	22	5	4	0	21	0	7	11	4	0	0	1	2	-	22	2	49	-	4	3	11
A217R4	0.0502	5	7	5	16	4	24	16	2	12	0	6	8	18	0	36	1	0	2	3	6	4	15	3	3	0	15	0	4	7	3	0	0	1	1	-	16	1	34	-	2	2	7
A217R5	0.0836	12	17	12	34	10	49	33	5	28	0	15	16	43	1	74	4	0	5	11	16	12	34	8	9	1	30	0	15	20	7	0	2	5	3	-	29	3	69	-	8	6	17
A217R6	0.0875	12	17	13	36	10	52	35	6	29	0	15	17	45	1	78	5	0	5	11	17	12	35	8	9	1	31	0	15	21	8	0	2	5	3	-	30	3	72	-	8	7	17
A217R7	0.086	12	17	13	35	10	51	34	5	29	0	15	16	44	1	76	5	0	5	11	17	12	35	8	9	1	31	0	15	21	8	0	2	5	3	-	30	3	71	-	8	7	17
A217R8	0.0631	9	13	9	26	7	37	25	4	21	0	11	12	32	1	56	3	0	4	8	12	9	25	6	7	0	23	0	11	15	6	0	2	4	2	-	22	2	52	-	6	5	13
A217SE	0.1515	395	530	492	538	465	792	686	304	505	445	597	548	792	549	876	548	532	423	454	847	602	618	502	645	509	628	630	518	470	473	353	421	416	511	-	582	546	585	-	749	542	554
A217SW	0.0784	212	285	264	289	250	425	368	163	271	239	321	294	425	295	469	294	286	227	244	455	323	332	269	347	273	337	338	278	252	254	190	226	224	274	-	312	293	314	-	402	291	298
A218NE	0.0513	117	158	146	160	138	236	204	90	150	132	177	163	235	163	262	163	158	125	135	251	179	183	149	191	151	187	187	154	139	141	105	125	124	152	-	174	162	175	-	223	161	165
A218SE	0.0517	130	175	162	178	153	261	226	100	166	147	197	181	261	181	289	180	176	139	150	279	199	204	165	212	168	207	208	171	154	156	116	139	137	168	-	192	180	193	-	247	178	183
A218W3	0.036	74	100	92	102	87	150	129	57	95	84	112	103	149	103	166	103	100	79	85	159	113	116	94	121	95	118	118	97	88	89	66	79	78	96	-	111	102	111	-	141	102	104
A220NE	0.0464	127	171	158	173	150	254	221	98	162	143	192	176	255	177	281	176	171	136	146	273	194	199	162	208	164	202	203	167	151	152	114	136	134	165	-	187	176	188	-	241	174	178
A220NW	0.0577	115	155	144	158	135	234	200	89	147	130	174	161	231	160	259	160	156	123	132	247	176	180	146	188	148	184	184	151	136	138	103	124	122	149	-	173	159	174	-	219	158	162
A220SW	0.1254	314	422	391	428	370	630	546	242	401	354	475	435	630	436	698	435	423	337	361	674	479	492	399	513	404	499	501	412	374	376	281	334	331	406	-	464	434	466	-	596	430	441
A221NE	0.0326	82	110	102	112	96	165	142	63	105	93	124	114	164	114	182	114	111	88	94	176	125	128	104	134	106	130	131	108	97	98	73	88	87	106	-	121	113	122	-	156	113	115
A221SE	0.0561	82	111	103	114	97	169	143	63	106	93	124	116	166	115	190	114	111	88	95	176	126	129	105	134	106	133	131	108	97	99	74	89	87	107	-	127	114	128	-	156	113	116
A222E1	0.0245	36	48	45	50	42	74	63	28	46	41	54	50	73	50	83	50	49	38	41	77	55	56	46	58	46	58	57	47	42	43	32	39	38	47	-	55	50	56	-	68	49	51
A222E2	0.0438	109	146	135	148	128	218	188	84	139	122	164	151	218	151	241	150	146	116	125	233	165	170	138	177	140	173	173	142	129	130	97	116	114	140	-	160	150	161	-	206	149	152
A222E3	0.0327	48	65	60	67	56	99	84	37	62	54	72	67	97	67	111	66	65	51	55	103	73	75	61	78	62	77	77	63	57	58	43	52	51	62	-	74	66	74	-	91	66	68
A222E4	0.1176	288	386	358	392	338	577	499	221	367	324	435	399	576	400	639	398	387	308	330	616	438	450	365	469	370	457	459	377	342	344	257	306	303	372	-	425	397	427	-	545	394	404
A222NE	0.0643	157	211	196	215	185	316	273	121	201	178	238	219	316	219	350	219	212	168	181	337	240	246	200	257	203	250	251	206	187	189	141	168	166	204	-	233	217	234	-	299	216	221
A222NW	0.1299	322	432	401	439	378	646	559	248	411	363	486	446	645	447	715	446	434	345	370	690	491	503	409	525	414	512	513	422	382	386	288	343	339	416	-	475	444	478	-	611	441	452
A222R1	0.0305	4	5	4	11	3	17	11	2	9	0	4	5	13	0	25	1	0	1	3	5	3	11	2	2	0	10	0	4	6	2	0	0	1	1	-	10	1	23	-	2	2	5
A222R2	0.0477	6	9	7	19	5	27	18	3	15	0	8	9	23	0	40	2	0	3	6	9	6	18	4	5	0	17	0	8	11	4	0	1	2	2	-	16	2	38	-	4	3	9
A222R3	0.0352	5	7	5	14	4	20	14	2	11	0	6	7	17	0	30	2	0	2	4	6	4	14	3	3	0	12	0	6	8	3	0	1	2	1	-	12	1	28	-	3	2	7
A222R4	0.1161	14	20	15	43	11	64	42	6	35	0	17	20	51	1	94	4	0	6	12	18	12	42	10	10	0	39	0	15	23	8	0	1	3	3	-	39	4	88	-	8	7	20
A222R5	0.095	12	18	14	37	10	55	37	5	31	0	16	18	46	1	81	4	0	5	11	17	12	37	8	9	0	33	0	15	21	8	0	2	4	3	-	33	4	76	-	8	6	18
A222R6	0.1075	14	20	15	42	11	62	41	6	35	0	18	20	52	1	91	5	0	6	13	19	13	41	10	10	0	37	0	17	24	9	0	2	5	4	-	37	4	86	-	9	7	20
A222R7	0.0913	12	17	13	36	10	53	35	5	29	0	15	17	44	1	78	4	0	5	11	16	11	35	8	9	0	32	0	14	20	7	0	2	4	3	-	31	3	73	-	8	6	17
A222R8	0.1058	14	20	15	42	11	61	41	6	34	0	17	20	51	1	90	5	0	6	13	19	13	41	9	10	0	37	0	17	23	9	0	2	5	4	-	36	4	84	-	9	7	20
A222R9	0.1117	13	19	14	41	11	61	40	6	33	0	17	20	49	0	90	4	0	5	11	18	12	40	9	9	0	37	0	15	22	8	0	1	3	3	-	38	4	85	-	8	6	19
A222SE	0.0762	181	243	226	247	213	364	315	140	232	204	274	252	364	252	404	251	244	194	208	389	276	284	230	296	233	288	289	238	215	217	162	193	191	234	-	269	250	270	-	344	248	255
A222SW	0.1301	318	427	396	434	374	639	552	245	406	358	481	441	638	442	707	441	428	341	365	682	485	498	404	519	410	506	507	417	378	381	284	339	335	411	-	470	439	473	-	603	436	446
A223NE	0.0668	163	220	204	223	192	329	284	126	209	185	247	227	328	227	364	227	221	175	188	351	250	256	208	267	211	260	261	214	194	196	146	175	173	212	-	242	226	243	-	310	224	230
A223SE	0.0645	162	218	202	221	191	326	282	125	207	183	245	225	325	226	360	225	219	174	186	348	248	254	206	265	209	258	259	213	193	194	145	173	171	210	-	239	224	241	-	308	222	228
A223SW	0.0711	146	197	182	201	172	296	254	113	187	165	221	204	294	204	329	203	198	156	168	313	224	229	186	238	188	234	233	192	173	175	131	157	155	190	-	219	202	220	-	278	201	206
A224NE	0.0624	141	189	176	193	165	284	244	108	180	159	213	196	282	196	315	195	190	150	162	302	215	220	179	230	181	224	225	185	167	169	126	151	149	182	-	209	195	211	-	267	193	198
A224NW	0.0992	252	338	314	344	297	506	438	194	322	284	381	350	505	350	560	349	340	270	290	541	384	394	320	412	325	401	402	330	300	302	225	269	266	326	-	372	348	374	-	478	346	354
A224R1	0.1117	12	18	12	38	10	58	38	5	30	0	15	19	45	0	85	3	0	5	9	15	10	37	9	8	0	36	0	12	19	7	0	0	2	3	-	37	3	81	-	7	5	18
A224R2	0.032	5	7	6	15	4	21	14	2	12	0	6	7	19	1	30	2	0	3	5	7	5	14	4	4	0	12	0	7	9	3	0	1	3	1	-	11	1	28	-	4	3	7
A224SW	0.0581	89	120	111	123	105	183	155	69	114	101	135	125	180	124	204	123	121	95	102	191	136	139	113	145	115	144	142	117	105	107	80	96	94	116	-	137	123	138	-	169	122	126
A225NE	0.0682	111	150	139	154	131	228	194	86	143	126	168	156	225	155	254	154	151	119	128	239	170	174	142	181	143	179	178	146	132	134	100	120	118	144	-	170	154	171	-	211	153	157
A225NW	0.1231	289	388	360	395	340	581	502	223	369	326	437	401	580	402	644	401	390	309	332	620	441	452	367	472	372	460	461	379	343	346	259	308	305	374	-	428	399	431	-	548	396	406
A225SE	0.0748	122	165	153	169	143	250	213	94	157	138	185	171	246	170	279	169	165	130	140	262	187	191	155	199	157	197	195	160	144	147	110	131	129	158	-	186	169	188	-	232	168	172
A226NE	0.068	113	153	142	157	133	232	197	87	145	128	171	159	229	158	258	157	153	121	130	243	173	177	144	184	146	182	181	149	134	136	102	122	120	147	-	172	157	174	-	215	155	160
A226NW	0.1354	327	438	406	445	384	656	567	251	417	368	493	453	655	454	727	452	440	350	375	700	498	511	414	533	420	519	521	428	388	391	292	348	344	422	-	483	451	486	-	619	447	458
A227NE	0.0287	48	64	60	66	56	98	83	37	61	54	72	67	96	67	109	66	65	51	55	102	73	75	61	78	62	77	76	63	57	57	43	51	51	62	-	73	66	73	-	91	66	67
A227NW	0.0646	107	145	134	149	126	220	187	83	138	122	163	151	217	150	246	149	146	115	124	231	165	168	137	175	139	173	172	141	127	129	97	116	114	140	-	164	149	165	-	204	148	152
A227SE	0.0679	113	152	141	156	133	231	197	87	145	128	171	159	228	157	258	157	153	121	130	242	173	177	144	184	146	182	181	148	134	136	102	122	120	147	-	172	156	173	-	215	155	160
A227SW	0.0984	234	315	292	320	275	471	407	180	299	264	354	325	470	326	522	325	316	251	269	502	357	367	297	382	302	373	374	307	278	281	210	250	247	303	-	347	324	349	-	445	321	329
A228NE	0.1045	252	338	314	344	296	506	438	194	322	284	381	350	505	350	561	349	340	270	290	540	384	394	320	411	325	401	402	330	299	302	225	269	266	326	-	373	348	375	-	478	345	354
A228NW	0.1369	335	450	417	457	394	673	582	258	428	378	506	465	672	466	745	464	452	359	385	718	511	524	425	547	431	533	534	439	398	401	300	357	353	433	-	495	463	498	-	636	459	470
A228R1	0.0632	7	11	8	23	6	34	23	3	19	0	9	11	28	0	51	2	0	3	6	10	7	22	5	5	0	21	0	8	12	4	0	0	1	2	-	21	2	48	-	5	4	11
A228R2	0.1043	12	20	15	42	11	61	40	6	34	0	17	20	51	1	89	5	0	6	13	19	13	41	9	10	0	37	0	17	23	9	0	2	5	4	-	36	4	83	-	9	7	20
A228SE	0.0654	102	138	128	141	120	210	178	79	131	116	155	143	207	142	234	142	138	109	118	219	157	160	130	167	132	165	163	134	121	123	92	110	108	133	-	156	141	157	-	194	140	144
A229N2	0.0307	79	107	99	108	93	159	138	61	101	89	120	110	159	110	176	110	107	85	91	170	121	124	101	129	102	126	127	104	94	95	71	85	84	103	-	117	110	118	-	150	109	111
A229NE	0.0591	110	148	137	152	129	224	191	85	141	124	166	154	222	153	249	152	149	117	127	236	168	172	140	179	142	176	176	144	130	132	99	118	117	143	-	166	152	167	-	209	151	155
A229NW	0.0601	155	208	193	212	182	311	269	119	198	175	234	215	311	216	344	215	209	166	178	332	237	243	197	253	200	246	247	203	184	186	139	166	164	201	-	229	214	230	-	294	213	218
A229R1	0.1224	18	25	19	52	15	75	50	8	43	0	22	24	66	1	110	7	0	8	17	25	18	51	12	14	1	45	0	23	31	11	1	3	8	5	-	43	5	103	-	12	10	25
A229R2	0.0799	10	15	11	32	9	46	31	5	26	0	13	15	39	1	68	3	0	4	9	14	10	31	7	8	0	28	0	13	18	6	0	1	3	3	-	27	3	64	-	7	5	15
A229SE	0.1047	253	339	314	345	297	507	439	194	323	285	382	350	506	351	562	350	340	270	290	541	385	395	321	412	325	402	403	331	300	303	226	269	266	327	-	374	349	376	-	479	346	354
A229SW	0.1401	343	460	427	468	403	688	595	264	438	387	518	476	687	476	762	475	462	367	394	735	523	536	435	560	441	545	547	449	407	411	307	366	362	443	-	507	474	510	-	650	470	481
A230NE	0.1102	270	362	336	368	317	542	468	208	345	304	408	374	541	375	600	374	364	289	310	578	411	422	342	440	347	429	430	353	320	323

Table B3 - Subcatchments
Yearly Runoff Volumes (m³)

Node	Area	1967	1968	1969	1970	1971	1972	1973	1974	1975	1976	1977	1978	1979	1980	1981	1982	1983	1984	1985	1986	1987	1988	1989	1990	1991	1992	1993	1994	1995	1996	1997	1998	1999	2000	2001	2002	2003	2004	2005	2006	2007	Average
A231SW	0.1371	331	444	412	451	389	664	574	255	422	373	500	459	663	460	736	458	446	354	380	709	504	517	420	540	426	526	527	433	393	396	296	352	349	428	-	489	457	492	-	627	453	**464**
A302NE	0.02	36	48	45	50	42	73	63	28	46	41	54	50	72	50	82	50	49	38	41	77	55	56	46	59	46	58	57	47	43	43	32	39	38	47	-	54	50	55	-	68	49	**51**
A302NW	0.02	36	48	45	50	42	73	63	28	46	41	54	50	72	50	82	50	49	38	41	77	55	56	46	59	46	58	57	47	43	43	32	39	38	47	-	54	50	55	-	68	49	**51**
A302NW1	0.026	66	89	83	91	78	133	115	51	85	75	100	92	133	92	147	92	90	71	76	142	101	104	84	108	85	106	106	87	79	80	59	71	70	86	-	98	92	99	-	126	91	**93**
A302R1	0.063	9	13	10	27	8	39	26	4	22	0	12	13	34	1	57	4	0	4	9	13	9	27	6	7	1	23	0	12	16	6	0	2	4	2	-	22	3	53	-	7	6	**13**
A302SE	0.028	50	68	63	70	59	103	88	39	65	57	76	70	101	70	114	70	68	54	58	108	77	79	64	82	65	81	80	66	60	60	45	54	53	65	-	76	70	77	-	96	69	**71**
A302SW	0.028	50	68	63	70	59	103	88	39	65	57	76	70	101	70	114	70	68	54	58	108	77	79	64	82	65	81	80	66	60	60	45	54	53	65	-	76	70	77	-	96	69	**71**
A302SW1	0.037	94	127	118	129	111	189	164	73	121	107	143	131	189	131	210	131	128	101	109	202	144	148	120	154	122	150	151	124	112	113	85	101	100	122	-	139	131	140	-	179	130	**133**
A303NE1	0.025	45	61	56	62	53	92	78	35	58	51	68	63	91	63	102	62	61	48	52	96	69	70	57	73	58	72	72	59	53	54	40	48	48	58	-	68	62	69	-	85	62	**63**
A303NW1	0.025	45	61	56	62	53	92	78	35	58	51	68	63	91	63	102	62	61	48	52	96	69	70	57	73	58	72	72	59	53	54	40	48	48	58	-	68	62	69	-	85	62	**63**
A303NW2	0.032	82	110	102	112	96	164	142	63	104	92	124	113	164	114	181	113	110	87	94	175	125	128	104	133	105	130	130	107	97	98	73	87	86	106	-	120	113	121	-	155	112	**115**
A303R1	0.102	15	21	17	44	12	64	43	7	36	0	19	21	56	1	92	6	0	7	14	21	15	43	10	12	1	38	0	20	26	9	1	3	7	4	-	36	4	86	-	11	9	**21**
A303R2	0.088	13	18	14	38	11	55	37	6	31	0	16	18	48	1	79	5	0	6	12	18	13	37	9	10	1	32	0	17	22	8	1	3	6	3	-	31	4	74	-	9	8	**18**
A303SE	0.03	54	73	67	74	63	110	94	42	69	61	82	75	109	75	122	75	73	58	62	116	83	84	69	88	70	87	86	71	64	65	48	58	57	70	-	82	75	82	-	102	74	**76**
A303SE1	0.044	79	107	99	109	93	161	138	61	101	89	120	111	159	110	180	110	107	84	91	170	121	124	101	129	102	127	126	104	94	95	71	85	84	103	-	120	109	121	-	150	109	**112**
A303SW	0.03	54	73	67	74	63	110	94	42	69	61	82	75	109	75	122	75	73	58	62	116	83	84	69	88	70	87	86	71	64	65	48	58	57	70	-	82	75	82	-	102	74	**76**
A303SW1	0.044	79	107	99	109	93	161	138	61	101	89	120	111	159	110	180	110	107	84	91	170	121	124	101	129	102	127	126	104	94	95	71	85	84	103	-	120	109	121	-	150	109	**112**
A303SW2	0.056	143	192	178	195	168	287	248	110	183	161	216	199	286	199	317	198	193	153	164	306	218	224	182	233	184	227	228	187	170	171	128	153	151	185	-	211	198	212	-	271	196	**201**
A303SW3	0.039	99	134	124	136	117	200	173	77	127	112	151	139	199	138	221	138	134	106	114	213	152	156	126	162	128	158	159	131	118	119	89	107	105	129	-	147	138	148	-	189	137	**140**
A306NE	0.111	268	360	334	366	315	538	465	206	342	302	405	372	537	373	596	371	361	287	308	574	409	419	340	437	345	426	427	351	318	321	240	286	283	347	-	396	370	399	-	508	367	**376**
A306NW	0.156	376	504	467	512	442	754	653	289	480	423	567	521	753	521	836	520	505	402	431	805	572	587	477	613	483	597	599	492	447	450	335	399	395	485	-	555	518	558	-	712	514	**527**
A306R2	0.127	18	27	21	55	15	79	53	8	45	0	24	26	70	2	115	8	0	9	18	26	19	54	13	15	1	47	0	25	32	12	1	4	8	5	-	45	5	107	-	13	11	**27**
A306SE	0.051	91	124	115	127	108	187	160	71	118	104	139	128	185	128	208	127	124	98	105	197	140	144	117	149	118	147	146	120	108	110	82	99	97	119	-	139	127	140	-	174	126	**129**
A306SW	0.051	91	124	115	127	108	187	160	71	118	104	139	128	185	128	208	127	124	98	105	197	140	144	117	149	118	147	146	120	108	110	82	99	97	119	-	139	127	140	-	174	126	**129**
A306SW1	0.064	163	220	204	223	192	328	283	126	209	184	247	227	327	227	362	226	221	175	188	350	250	256	208	266	210	260	261	214	194	196	146	175	173	212	-	241	226	243	-	310	224	**229**
A310NE	0.043	104	139	129	142	122	208	180	80	133	117	157	144	208	144	231	144	140	111	119	222	158	162	132	169	134	165	165	136	123	124	93	111	109	134	-	153	143	154	-	197	142	**146**
A310NE1	0.028	68	91	84	93	80	136	118	52	87	76	102	94	136	94	151	94	91	72	78	145	103	106	86	110	87	108	108	89	80	81	61	72	72	88	-	100	94	101	-	129	93	**95**
A310NW	0.054	130	175	162	178	153	261	226	100	166	147	197	181	261	181	290	180	175	139	150	279	198	204	165	213	168	207	208	171	155	156	116	139	137	168	-	193	180	194	-	247	178	**183**
A310R1	0.044	6	9	7	19	5	27	18	3	16	0	8	9	24	1	40	3	0	3	6	9	6	19	4	5	0	16	0	9	11	4	0	1	3	2	-	15	2	37	-	5	4	**9**
A310SE	0.034	82	110	102	112	97	165	143	63	105	93	124	114	165	114	183	114	111	88	94	176	125	129	104	134	106	131	131	108	98	98	74	88	87	106	-	122	114	122	-	156	113	**115**
A310SW	0.054	130	175	162	178	153	261	226	100	166	147	197	181	261	181	290	180	175	139	150	279	198	204	165	213	168	207	208	171	155	156	116	139	137	168	-	193	180	194	-	247	178	**183**
A311NE	0.12	290	389	361	395	341	582	503	223	370	327	438	402	581	403	645	401	390	310	333	621	442	453	368	473	373	461	462	380	344	347	259	309	306	375	-	429	400	431	-	550	397	**407**
A311NW	0.067	162	217	201	220	190	324	281	124	206	182	244	224	324	224	359	224	218	173	186	346	246	253	205	264	208	257	258	212	192	193	144	172	170	209	-	239	223	240	-	306	221	**227**
A311R1	0.107	16	22	17	46	13	67	45	7	38	0	20	22	58	1	96	6	0	7	15	22	16	45	11	13	1	39	0	21	27	10	1	3	7	4	-	38	5	90	-	11	9	**22**
A311SE	0.119	287	385	357	391	337	576	498	221	366	323	434	398	575	399	638	397	386	307	329	615	437	449	364	468	369	456	458	376	341	344	256	306	302	371	-	424	396	427	-	544	393	**403**
A311SW	0.067	162	217	201	220	190	324	281	124	206	182	244	224	324	224	359	224	218	173	186	346	246	253	205	264	208	257	258	212	192	193	144	172	170	209	-	239	223	240	-	306	221	**227**
APOND2	0.019	35	48	44	49	42	72	62	27	45	40	54	49	71	49	80	49	48	38	41	76	54	55	45	58	46	57	57	46	42	42	32	38	38	46	-	53	49	54	-	67	49	**50**
Total	**27.058**	**39,389**	**53,080**	**48,882**	**55,887**	**45,914**	**82,437**	**69,999**	**29,920**	**51,770**	**43,137**	**59,247**	**54,895**	**81,090**	**53,228**	**93,387**	**53,350**	**51,588**	**41,395**	**44,890**	**83,497**	**59,373**	**63,292**	**49,371**	**63,216**	**49,276**	**64,230**	**61,019**	**51,418**	**47,267**	**46,518**	**34,237**	**40,949**	**40,682**	**49,771**	**-**	**60,203**	**53,148**	**64,645**	**-**	**73,268**	**52,994**	**55,432**

Table B4 - Subcatchments
Yearly Surface Evaporation Volumes (m³)

Node	Area	1967	1968	1969	1970	1971	1972	1973	1974	1975	1976	1977	1978	1979	1980	1981	1982	1983	1984	1985	1986	1987	1988	1989	1990	1991	1992	1993	1994	1995	1996	1997	1998	1999	2000	2001	2002	2003	2004	2005	2006	2007	Average
A102NE	0.1339	43	79	86	91	97	109	94	75	77	93	90	102	94	95	115	84	91	60	79	106	97	94	89	105	90	96	112	82	49	79	66	89	77	105	-	72	97	89	-	99	98	**88**
A103NE	0.1353	50	92	100	106	113	127	110	88	90	109	105	119	110	111	135	98	106	70	92	124	114	109	104	123	104	112	131	96	58	92	77	104	90	122	-	84	113	104	-	116	115	**103**
A103SW	0.0582	20	36	39	42	45	50	43	35	35	43	41	47	43	44	53	38	42	27	36	49	45	43	41	48	41	44	51	38	23	36	30	41	35	48	-	33	44	41	-	46	45	**41**
A104NE	0.1378	49	90	98	103	111	124	108	86	88	107	103	116	108	109	132	96	104	68	90	122	111	107	102	120	102	110	128	94	56	90	75	102	89	120	-	82	111	102	-	113	112	**101**
A104NW	0.0471	10	18	20	21	22	25	22	17	18	21	21	23	22	22	26	19	21	14	18	24	22	21	20	24	20	22	26	19	11	18	15	20	18	24	-	16	22	20	-	23	22	**20**
A104SE	0.0528	19	34	37	39	42	47	41	33	33	40	39	44	41	41	50	36	39	26	34	46	42	41	39	46	39	42	49	36	21	34	29	39	34	45	-	31	42	39	-	43	43	**38**
A104SW	0.0473	17	31	34	36	39	43	37	30	30	37	36	40	37	38	46	33	36	24	31	42	39	37	35	42	36	38	44	33	20	31	26	35	31	42	-	28	38	35	-	39	39	**35**
A105NE	0.0577	20	36	39	41	44	50	43	34	35	43	41	46	43	43	53	38	42	27	36	49	44	43	41	48	41	44	51	38	23	36	30	41	35	48	-	33	44	41	-	45	45	**40**
A105NW	0.1045	40	73	78	83	89	100	87	69	70	86	83	93	86	87	106	77	84	55	72	98	89	86	82	97	82	88	103	76	45	72	61	82	71	96	-	66	89	82	-	91	90	**81**
A105SE	0.0582	20	36	39	42	45	50	43	35	35	43	41	47	43	44	53	39	42	27	36	49	45	43	41	49	41	44	51	38	23	36	30	41	36	48	-	33	45	41	-	46	45	**41**
A105SW	0.1044	42	77	84	88	95	106	92	74	75	91	88	99	92	93	113	82	89	58	77	104	95	92	87	103	87	94	109	81	48	77	64	88	76	102	-	70	95	87	-	97	96	**86**
A106N1	0.0845	33	61	66	70	75	84	73	58	59	72	69	78	72	73	89	64	70	46	61	82	75	72	69	81	69	74	86	63	38	60	51	69	60	81	-	55	75	69	-	76	76	**68**
A106N2	0.0773	31	57	62	65	70	79	68	54	55	67	65	73	68	69	83	60	66	43	57	77	70	68	64	76	65	69	81	59	36	57	48	65	56	76	-	52	70	64	-	72	71	**64**
A106NE	0.0626	23	42	46	48	52	58	50	40	41	50	48	54	50	51	62	45	49	32	42	57	52	50	48	56	48	51	60	44	26	42	35	48	42	56	-	38	52	48	-	53	53	**47**
A106NW	0.0644	25	45	49	52	56	62	54	43	44	53	52	58	54	55	66	48	52	34	45	61	56	54	51	60	51	55	64	47	28	45	38	51	44	60	-	41	56	51	-	57	56	**51**
A106R1	0.0465	11	20	21	23	24	27	24	19	19	23	23	26	24	24	29	21	23	15	20	27	24	24	22	27	22	24	28	21	12	20	17	22	19	26	-	18	24	22	-	25	25	**22**
A106R2	0.1506	26	48	52	55	59	66	58	46	47	57	55	62	58	58	70	51	55	36	48	65	59	57	54	64	55	59	68	50	30	48	40	54	47	64	-	44	59	54	-	61	60	**54**
A106SE	0.073	30	54	59	62	67	75	65	52	53	64	62	70	65	66	79	58	63	41	54	73	67	65	61	73	62	66	77	57	34	54	45	62	53	72	-	49	67	61	-	68	68	**61**
A106SW	0.0666	26	47	51	54	58	65	56	45	46	56	54	61	56	57	69	50	54	36	47	64	58	56	53	63	53	57	67	49	30	47	39	53	46	63	-	43	58	53	-	59	59	**53**
A108N1	0.052	11	19	21	22	24	27	23	18	19	23	22	25	23	23	28	21	22	15	19	26	24	23	22	26	22	24	27	20	12	19	16	22	19	26	-	18	24	22	-	24	24	**22**
A108NE	0.0393	14	26	28	30	32	36	31	25	25	31	30	33	31	31	38	28	30	20	26	35	32	31	29	35	29	32	37	27	16	26	22	29	25	34	-	24	32	29	-	33	32	**29**
A108NW	0.0287	7	12	14	14	15	17	15	12	12	15	14	16	15	15	18	13	14	9	12	17	15	15	14	17	14	15	18	13	8	12	10	14	12	17	-	11	15	14	-	16	16	**14**
A108R1	0.2228	43	79	86	91	98	109	95	76	77	94	91	102	95	95	116	84	91	60	79	107	98	94	90	106	90	96	112	83	50	79	66	90	78	105	-	72	97	89	-	100	99	**89**
A108R2	0.1143	21	39	42	44	47	53	46	37	38	45	44	50	46	46	56	41	44	29	38	52	48	46	44	52	44	47	55	40	24	38	32	44	38	51	-	35	47	44	-	49	48	**43**
A108SE	0.1135	39	72	78	82	88	99	86	68	70	85	82	92	85	86	105	76	83	54	71	97	88	85	81	95	81	87	101	75	45	71	60	81	70	95	-	65	88	81	-	90	89	**80**
A108SW	0.0507	15	28	30	32	34	39	33	27	27	33	32	36	33	34	41	30	32	21	28	38	35	33	32	37	32	34	40	29	18	28	23	32	27	37	-	25	34	32	-	35	35	**31**
A109NE	0.0292	6	11	12	13	14	15	13	11	11	13	13	14	13	13	16	12	13	8	11	15	14	13	13	15	13	14	16	12	7	11	9	13	11	15	-	10	14	13	-	14	14	**12**
A109NW	0.0533	19	34	37	39	42	47	41	33	33	41	39	44	41	41	50	36	40	26	34	46	42	41	39	46	39	42	49	36	21	34	29	39	34	46	-	31	42	39	-	43	43	**38**
A109SE	0.0936	32	59	64	67	72	81	70	56	57	69	67	76	70	71	86	62	68	44	58	79	72	70	66	78	67	71	83	61	37	58	49	66	58	78	-	53	72	66	-	74	73	**66**
A110NE	0.1026	37	68	74	78	84	94	81	65	66	80	78	88	81	82	99	72	78	52	68	92	84	81	77	91	77	83	96	71	43	68	57	77	67	90	-	62	84	77	-	86	85	**76**
A110NW	0.0866	32	58	63	67	72	80	70	56	57	69	66	75	69	70	85	62	67	44	58	79	72	69	66	78	66	71	83	61	36	58	49	66	57	77	-	53	71	66	-	73	73	**65**
A110R1	0.0385	9	16	17	18	19	22	19	15	15	19	18	20	19	19	23	17	18	12	16	21	19	19	18	21	18	19	22	16	10	16	13	18	15	21	-	14	19	18	-	20	20	**18**
A110R10	0.0379	9	16	18	19	20	22	19	15	16	19	18	21	19	19	24	17	19	12	16	22	20	19	18	22	18	20	23	17	10	16	14	18	16	21	-	15	20	18	-	20	20	**18**
A110R2	0.0357	8	15	16	17	18	20	17	14	14	17	17	19	17	18	21	16	17	11	15	20	18	17	17	20	17	18	21	15	9	15	12	17	14	19	-	13	18	16	-	18	18	**16**
A110R3	0.0389	9	16	17	18	20	22	19	15	16	19	18	20	19	19	23	17	18	12	16	21	20	19	18	21	18	19	23	17	10	16	13	18	16	21	-	14	19	18	-	20	20	**18**
A110R4	0.0471	11	19	21	22	24	27	23	18	19	23	22	25	23	23	28	20	22	15	19	26	24	23	22	26	22	23	27	20	12	19	16	22	19	26	-	17	24	22	-	24	24	**22**
A110R5	0.0452	11	19	21	22	24	27	23	18	19	23	22	25	23	23	28	21	22	15	19	26	24	23	22	26	22	23	27	20	12	19	16	22	19	26	-	18	24	22	-	24	24	**22**
A110R6	0.0418	10	18	19	21	22	25	21	17	17	21	20	23	21	22	26	19	21	14	18	24	22	21	20	24	20	22	25	19	11	18	15	20	18	24	-	16	22	20	-	23	22	**20**
A110R7	0.0456	11	20	21	22	24	27	23	19	19	23	22	25	23	23	28	21	22	15	19	26	24	23	22	26	22	24	28	20	12	19	16	22	19	26	-	18	24	22	-	25	24	**22**
A110R8	0.0591	14	25	27	29	31	35	30	24	25	30	29	33	30	30	37	27	29	19	25	34	31	30	29	34	29	31	36	26	16	25	21	29	25	34	-	23	31	29	-	32	32	**28**
A110R9	0.0323	7	13	14	15	16	17	15	12	12	15	14	16	15	15	18	13	15	10	13	17	16	15	14	17	14	15	18	13	8	13	11	14	12	17	-	11	15	14	-	16	16	**14**
A110SE	0.0587	22	40	44	46	50	56	48	38	39	47	46	51	48	48	58	42	46	30	40	54	50	48	46	54	46	49	57	42	25	40	34	46	40	54	-	37	50	46	-	51	50	**45**
A110SW	0.0824	29	53	57	60	64	72	63	50	51	62	60	68	63	63	77	56	60	40	52	71	65	62	59	70	59	64	74	55	33	52	44	59	51	70	-	48	64	59	-	66	65	**59**
A111NW	0.0905	32	59	64	68	73	82	71	57	58	70	68	76	71	71	86	63	68	45	59	80	73	70	67	79	67	72	84	62	37	59	49	67	58	79	-	54	73	67	-	75	74	**66**
A111SE	0.0869	32	59	63	67	72	81	70	56	57	69	67	75	70	70	85	62	67	44	58	79	72	69	66	78	66	71	83	61	37	58	49	66	57	78	-	53	72	66	-	74	73	**65**
A112NE	0.1184	42	77	83	88	94	105	91	73	74	90	87	98	91	92	112	81	88	58	76	103	94	91	86	102	87	93	108	80	48	76	64	87	75	101	-	69	94	86	-	96	95	**86**
A112NW	0.0531	20	36	39	41	44	49	43	34	35	42	41	46	43	43	52	38	41	27	36	48	44	42	40	48	40	43	51	37	22	36	30	40	35	47	-	32	44	40	-	45	44	**40**
A112R3	0.0559	14	25	27	29	31	34	30	24	24	29	28	32	30	30	36	26	29	19	25	33	31	30	28	33	28	30	35	26	16	25	21	28	24	33	-	23	30	28	-	31	31	**28**
A112R4	0.0976	22	40	43	46	49	55	48	38	39	47	46	51	48	48	58	42	46	30	40	54	49	47	45	53	45	49	57	42	25	40	33	45	39	53	-	36	49	45	-	50	50	**45**
A112SE	0.1192	44	80	87	92	99	111	96	77	78	95	91	103	96	97	117	85	92	61	80	108	99	95	91	107	91	98	114	84	50	80	67	91	79	106	-	73	98	91	-	101	100	**90**
A112SW	0.0441	17	31	34	36	38	43	37	30	30	37	36	40	37	38	46	33	36	24	31	42	39	37	35	42	35	38	44	33	20	31	26	35	31	41	-	28	38	35	-	39	39	**35**
A112WK	0.0389	6	11	12	13	14	15	13	11	11	13	13	14	13	13	16	12	13	8	11	15	14	13	12	15	12	13	16	11	7	11	9	12	11	15	-	10	13	12	-	14	14	**12**
A113R1	0.1345	26	48	52	55	59	66	57	46	47	56	55	61	57	57	70	51	55	36	48	64	59	57	54	64	54	58	68	50	30	48	40	54	47	63	-	43	59	54	-	60	60	**53**
A113R2	0.0836	19	34	37	39	42	47	41	33	33	40	39	44	41	41	50	36	39	26	34	46	42	41	39	46	39	42	48	36	21	34	29	39	34	45	-	31	42	39	-	43	43	**38**
A114NE	0.0293	11	20	22	23	25	28	24	19	20	24	23	26	24	25	30	22	24	15	20	28	25	24	23	27	23	25	29	21	13	20	17	23	20	27	-	19	25	23	-	26	25	**23**
A114R1	0.0675	16	30	33	35	37	41	36	29	29	35	34	39	36	36	44	32	35	23	30	40	37	36	34	40	34	37	43	31	19	30	25	34	29	40	-	27	37	34	-	38	37	**34**
A114R2	0.0534	11	21	23	24	26	29	25	20	20	25	24	27	25	25	30	22	24	16	21	28	26	25	24	28	24	25	30	22	13	21	17	24	20	28	-	19	26	24	-	26	26	**23**
A114R3	0.0736	17	30	33	35	37	41	36	29	29	36	34	39	36	36	44	32	35	23	30	41	37	36	34	40	34	37	43	31	19	30	25	34	30	40	-	27	37	34	-	38	38	**34**
A114R4	0.1447	34	62	67	71	76	85	74	59	60	73	70	80	74	74	90	66	71	47	62	83	76	73	70	83	70	75	88	65	39	62	52	70	61	82	-	56	76	70	-	78	77	**69**
A114SE	0.1052	33	61	66	70	75	84	73	58	59	72	69	78	73	73	89	65	70	46	61	82	75	72	69	81	69	74	86	64	38	61	51	69	60	81	-	55	75	69	-	77	76	**68**
A114SW	0.1843	65	119	129	137	146	164	142	114	116	141	136	153	142	144	174	127	137	90	119	161	147	141	135	159	135	145	169	125	75	119	100	135	117	158	-	108	146	135	-	150	148	**133**
A115NE	0.08	28	51	55	58	63	70	61	49	49	60	58	66	61	61	74	54	59	39	51	69	63	60	58	68	58	62	72	53	32	51	43	58	50	68	-	46	62	57	-	64	63	**57**
A115NW	0.0502	18	34	36	39	41	46	40	32	33	40	38	43	40	41	49	36	39	25	34	45	41	40	38	45	38	41	48	35	21	34	28	38	33	45	-	31	41	38	-	42	42	**38**
A115R1	0.0441	9	17	19	20	21	24	21	16	17	20	20	22	21	21	25	18	20	13	17	23	21	21	19	23	20	21	24	18	11	17	14	20	17	23	-	16	21	19	-	22	22	**19**
A115R2	0.0429	10	18	19	20	22	24	21	17	17	21	20	23	21	21	26	19	20	13	17	24	22	21	20	23	20	21	25	18	11	17	15	20	17	23	-	16	22	20	-	22	22	**20**
A115R3	0.0346	8	14	15	16	17	19	17	14	14	17	16	18	17	17	21	15	16	11	14	19	17	17	16	19	16	17	20	15	9	14	12	16	14	19	-	13	17	16	-	18	18	**16**
A115R4	0.0355	8	15	16	17	19	21	18	15	15	18	17	20	18	18	22	16	17	12	15	20	19	18	17	20	17	18	22	16	9	15	13	17	15	20	-	14	19	17	-	19	19	**17**
A115R5	0.05	12	21	23	25	26	29	26	20	21	25	24	28	26	26	31	23	25	16	21	29	26	25	24	29	24	26	30	22	13	21	18	24	21	28	-	19	26	24	-	27	27	**24**
A115R6	0.0405	10	17	19	20	21	24	21	17	17	20	20	22	21	21	25	18	20	13	17	23	21	21	20	23	20	21	25	18	11	17	14	20	17	23	-	16	21	20	-	22	22	**19**
A115SE	0.0218	5	9	9	10	11	12	10	8	8	10	10	11	10	10	13	9	10	7	9	12	11	10	10	12	10	11	12	9	5	9	7	10	9	12	-	8	11	10	-	11	11	**10**
A115SW	0.0392	8	15	17	18	19	21	18	15	15	18	17	20	18	18	22	16	18	12	15	21	19	18	17	20	17	19	22	16	10	15	13	17	15	20	-	14	19	17	-	19	19	**17**
A115W1	0.0351	11	20	21	23	24	27	24	19	19	23	22	25	24	24	29	21	23	15	20	27	24	23	22	26	22	24	28	21	12	20	16	22	19	26	-	18	24	22	-	25	25	**22**
A116E1	0.037	11	20	22	23	25	28	24	19	20	24	23	26	24	24	29	21	23	15	20	27	25	24	23	27	23	24	28	21	13	20	17	23	20	27	-	18	25	23	-	25	25	**23**
A116NE	0.081	28	51	56	59	63	71	61	49	50	61	59	66	61	62	75	55	59	39	51	69	63	61	58	69	58	63	73	54	32	51	43	58	50	68	-	47	63	58	-	65	64	**58**
A116NW	0.0753	27	49	53	57	61	68	59	47	48	58	56	63	59	59	72	52	57	37	49	66	61	59	56	66	56	60	70	52	31	49	41	56	48	65	-	45	60	56	-	62	61	**55**
A116R1	0.1084	19	35	38	40	43	48	41	33	34	41	40	45	41	42	51	37	40	26	34	47	43	41	39	46	39	42	49	36	22	35	29	39	34	46	-	32	43	39	-	44	43	**39**
A116R2	0.1022	15	27	29	31	33	37	32	26	26	32	31	35	32	33	40	29	31	21	27	37	33	32	31	36	31	33	38	28	17	27	23	31	27	36	-	25	33	31	-	34	34	**30**
A116R3	0.0796	17	31	34	36	38	43	37	30	30	37	35	40	37	37	45	33	36	24	31	42	38	37	35	42	35	38	44	33	19	31	26	35	31	41	-	28	38	35	-	39	39	**35**
A116R4	0.059	13	23	25	27	28	32	28	22	23	27	26	30	28	28	34	24	27	17	23	31	28	27	26	31	26	28	33	24	14	23	19	26	23	31	-	21	28	26	-	29	29	**26**
A116R5	0.069	14	26	28	30	32	36	31	25	25	30	29	33	31	31	38	27	30	20	26	35	32	31	29	34	29	31	37	27	16	26	22	29	25	34	-	23	32	29	-	33	32	**29**
A116R6	0.066	15	28	31	32	35	39	34	27	28	33	32	36	34	34	41	30	33	21	28	38	35	34	32	38	32	34	40	30	18	28	24	32	28	37	-	26	35	32	-	36	35	**32**
A116R7	0.062	15	27	29	30	33	37	32	25	26	31	30	34	32	32	39	28	31	20	26	36	33	32	30	35	30	32	38	28	17	26	22	30	26	35	-	24	33	30	-	33	33	**30**
A116SE	0.0791	25	45	49	52	56	62	54	43	44	53	52	58	54	54	66	48	52	34	45	61	56	54	51	60	51	55	64	47	28	45	38	51	44	60	-	41	55	51	-	57	56	**51**
A116SW	0.0762	30	56	60	64	68	76	66	53	54	65	63	71	66	67	81	59	64	42	55	75	68	66	63	74	63	67	79	58	35	55	46	63	54	74	-	50	68	63	-	70	69	**62**
A117NE	0.0839	30	54	59	62	67	75	65	52	53	64	62	70	65	65	79	58	62	41	54	73	67	64	61	72	61	66	77	57	34	54	45	61	53	72	-	49	66	61	-	68	67	**61**
A117NW	0.0821	29	54	58	62	66	74	64	51	52	63	61	69	64	65	78	57	62	41	54	72	66	64	61	72	61	65	76	56	34	54	45	61	53	71	-	49	66	61	-	68	67	**60**
A117R1	0.085	17	30	33	35	37	42	36	29	29	36	34	39	36	36	44	32	35	23	30	41	37	36	34	40	34	37	43	32	19	30	25	34	30	40	-	27	37	34	-	38	38	**34**
A117R2	0.062	14	25	27	29	31	35	30	24	25	30	29	33	30	30	37	27	29	19	25	34	31	30	29	34	29	31	36	27	16

Table B4 - Subcatchments
Yearly Surface Evaporation Volumes (m³)

Node	Area	1967	1968	1969	1970	1971	1972	1973	1974	1975	1976	1977	1978	1979	1980	1981	1982	1983	1984	1985	1986	1987	1988	1989	1990	1991	1992	1993	1994	1995	1996	1997	1998	1999	2000	2001	2002	2003	2004	2005	2006	2007	Average
A122NE	0.1276	44	81	87	92	99	111	96	77	78	95	92	104	96	97	117	85	93	61	80	108	99	95	91	107	91	98	114	84	50	80	67	91	79	107	-	73	99	91	-	101	100	90
A122R1	0.0732	11	20	21	22	24	27	23	19	19	23	22	25	23	23	28	21	22	15	19	26	24	23	22	26	22	24	28	20	12	19	16	22	19	26	-	18	24	22	-	24	24	22
A122R2	0.2135	31	57	62	65	70	78	68	54	55	67	65	73	68	68	83	60	65	43	56	76	70	68	64	76	64	69	80	59	36	57	47	64	56	75	-	52	70	64	-	71	71	64
A124NE	0.0469	15	27	30	31	34	38	33	26	27	32	31	35	33	33	40	29	31	21	27	37	34	32	31	36	31	33	39	29	17	27	23	31	27	36	-	25	33	31	-	34	34	31
A124NW	0.131	46	84	91	97	104	116	101	81	82	100	96	109	101	102	123	90	97	64	84	114	104	100	95	113	96	103	120	88	53	84	71	96	83	112	-	77	104	95	-	106	105	94
A124R1	0.0918	20	36	39	41	44	49	43	34	35	42	41	46	43	43	52	38	41	27	36	48	44	43	41	48	41	44	51	38	22	36	30	41	35	48	-	33	44	41	-	45	45	40
A124R2	0.136	28	51	55	58	62	70	61	48	49	60	58	65	61	61	74	54	58	38	50	68	63	60	57	68	57	62	72	53	32	51	42	57	50	67	-	46	62	57	-	64	63	57
A124SE	0.0469	18	32	35	37	40	45	39	31	32	38	37	42	39	39	47	34	37	25	32	44	40	38	37	43	37	39	46	34	20	32	27	37	32	43	-	29	40	37	-	41	40	36
A124SW	0.136	52	95	103	109	117	131	114	91	92	112	108	122	113	115	139	101	110	72	95	128	117	113	107	127	108	116	135	99	60	95	79	108	93	126	-	86	117	107	-	120	118	106
A125E1	0.0575	13	24	26	27	29	33	28	23	23	28	27	31	29	29	35	25	28	18	24	32	30	28	27	32	27	29	34	25	15	24	20	27	23	32	-	22	29	27	-	30	30	27
A125NE	0.0478	17	31	34	36	38	43	37	30	30	37	36	40	37	38	45	33	36	24	31	42	38	37	35	42	35	38	44	33	20	31	26	35	31	41	-	28	38	35	-	39	39	35
A125NW	0.0931	35	64	69	73	78	88	76	61	62	75	72	82	76	77	93	67	73	48	63	86	78	75	72	85	72	77	90	66	40	63	53	72	62	84	-	58	78	72	-	80	79	71
A125R1	0.1047	22	41	44	47	50	56	49	39	40	48	47	53	49	49	60	43	47	31	41	55	50	49	46	55	46	50	58	43	26	41	34	46	40	54	-	37	50	46	-	52	51	46
A125R2	0.1093	23	43	46	49	53	59	51	41	42	50	49	55	51	51	62	45	49	32	43	58	53	51	48	57	48	52	61	45	27	43	36	48	42	57	-	39	52	48	-	54	53	48
A125SE	0.0476	18	34	36	39	41	46	40	32	33	40	38	43	40	41	49	36	39	25	34	45	41	40	38	45	38	41	48	35	21	34	28	38	33	45	-	31	41	38	-	42	42	38
A125SW	0.0931	37	67	72	77	82	92	80	64	65	79	76	86	80	81	98	71	77	51	67	90	83	79	76	89	76	81	95	70	42	67	56	76	66	89	-	61	82	76	-	84	83	75
A126E1	0.0331	13	24	26	27	29	33	28	23	23	28	27	31	28	29	35	25	27	18	24	32	29	28	27	32	27	29	34	25	15	24	20	27	23	31	-	22	29	27	-	30	30	27
A126NE	0.0333	7	14	15	16	17	19	16	13	13	16	15	17	16	16	20	14	16	10	14	18	17	16	15	18	15	17	19	14	9	14	11	15	13	18	-	12	17	15	-	17	17	15
A126NW	0.0258	6	10	11	12	13	14	12	10	10	12	12	13	12	12	15	11	12	8	10	14	13	12	12	14	12	13	15	11	6	10	9	12	10	14	-	9	13	12	-	13	13	12
A126R1	0.0977	20	37	39	42	45	50	44	35	36	43	42	47	44	44	53	39	42	28	36	49	45	43	41	49	41	44	52	38	23	36	30	41	36	48	-	33	45	41	-	46	45	41
A126SE	0.032	9	17	18	20	21	23	20	16	17	20	19	22	20	21	25	18	20	13	17	23	21	20	19	23	19	21	24	18	11	17	14	19	17	23	-	16	21	19	-	21	21	19
A126SW	0.0259	7	13	14	15	16	18	16	13	13	16	15	17	16	16	19	14	15	10	13	18	16	16	15	18	15	16	19	14	8	13	11	15	13	18	-	12	16	15	-	17	17	15
A126W1	0.0767	29	53	57	61	65	73	63	50	51	62	60	68	63	64	77	56	61	40	53	71	65	63	60	71	60	64	75	55	33	53	44	60	52	70	-	48	65	60	-	67	66	59
A129NE	0.1715	61	111	120	127	136	153	133	106	108	131	126	143	132	134	162	118	128	84	111	150	137	132	125	148	126	135	157	116	69	111	93	126	109	147	-	101	136	125	-	140	138	124
A129NW	0.0657	24	43	47	49	53	59	51	41	42	51	49	55	51	52	63	46	50	33	43	58	53	51	49	57	49	52	61	45	27	43	36	49	42	57	-	39	53	49	-	54	54	48
A129R1	0.123	26	48	52	55	59	66	58	46	47	57	55	62	57	58	70	51	55	36	48	65	59	57	54	64	54	59	68	50	30	48	40	54	47	64	-	44	59	54	-	61	60	54
A129R2	0.1272	26	48	51	55	58	65	57	45	46	56	54	61	57	57	69	50	55	36	47	64	58	57	54	63	54	58	67	50	30	47	40	54	47	63	-	43	58	54	-	60	59	53
A129SE	0.097	27	50	54	57	62	69	60	48	49	59	57	64	60	60	73	53	58	38	50	67	62	59	57	67	57	61	71	52	31	50	42	57	49	66	-	45	61	56	-	63	62	56
A129SW	0.0642	23	42	46	48	52	58	50	40	41	50	48	54	50	51	61	45	48	32	42	57	52	50	47	56	48	51	60	44	26	42	35	48	41	56	-	38	52	47	-	53	52	47
A130NE	0.15	55	101	109	116	124	139	121	96	98	119	115	130	120	122	147	107	116	76	101	136	125	120	114	135	114	123	143	105	63	101	84	114	99	134	-	92	124	114	-	127	126	113
A130NW	0.047	17	30	33	35	37	42	36	29	29	36	34	39	36	36	44	32	35	23	30	41	37	36	34	40	34	37	43	32	19	30	25	34	30	40	-	27	37	34	-	38	38	34
A130R1	0.175	36	65	71	75	80	90	78	62	64	77	74	84	78	78	95	69	75	49	65	88	80	78	74	87	74	79	92	68	41	65	54	74	64	87	-	59	80	74	-	82	81	73
A130SE	0.147	51	94	101	107	115	129	112	89	91	110	107	120	112	113	137	99	108	71	93	126	115	111	106	125	106	114	133	98	59	93	78	106	92	124	-	85	115	106	-	118	117	105
A130SW	0.055	20	37	40	42	45	51	44	35	36	44	42	47	44	44	54	39	43	28	37	50	46	44	42	49	42	45	52	39	23	37	31	42	36	49	-	34	45	42	-	46	46	41
A132N1	0.029	6	12	13	13	14	16	14	11	11	14	13	15	14	14	17	12	13	9	12	16	14	14	13	15	13	14	16	12	7	12	10	13	11	15	-	11	14	13	-	15	14	13
A132NE	0.028	7	13	15	15	17	18	16	13	13	16	15	17	16	16	20	14	15	10	13	18	17	16	15	18	15	16	19	14	8	13	11	15	13	18	-	12	16	15	-	17	17	15
A132NW	0.033	13	23	25	27	29	32	28	22	23	27	27	30	28	28	34	25	27	18	23	31	29	28	26	31	26	28	33	24	15	23	19	26	23	31	-	21	29	26	-	29	29	26
A132R1	0.088	18	33	36	38	40	45	39	31	32	39	37	42	39	39	48	35	38	25	33	44	40	39	37	44	37	40	46	34	21	33	27	37	32	43	-	30	40	37	-	41	41	37
A132R2	0.1119	23	42	45	48	51	57	50	40	41	49	48	54	50	50	61	44	48	32	42	56	51	50	47	56	47	51	59	44	26	42	35	47	41	55	-	38	51	47	-	53	52	47
A132R3	0.1145	25	45	49	51	55	62	54	43	44	53	51	58	54	54	65	48	52	34	45	60	55	53	51	60	51	54	63	47	28	45	37	51	44	59	-	41	55	51	-	56	56	50
A132R4	0.101	22	40	43	45	49	54	47	38	39	47	45	51	47	47	58	42	45	30	39	53	49	47	45	53	45	48	56	41	25	39	33	45	39	52	-	36	48	45	-	50	49	44
A132SE	0.033	9	17	18	19	21	23	20	16	16	20	19	21	20	20	24	18	19	13	17	23	21	20	19	22	19	20	24	17	10	17	14	19	16	22	-	15	20	19	-	21	21	19
A132SW	0.048	16	30	33	35	37	42	36	29	29	36	34	39	36	36	44	32	35	23	30	41	37	36	34	40	34	37	43	31	19	30	25	34	30	40	-	27	37	34	-	38	38	34
A133NE	0.0433	8	14	15	16	17	20	17	14	14	17	16	18	17	17	21	15	16	11	14	19	17	17	16	19	16	17	20	15	9	14	12	16	14	19	-	13	17	16	-	18	18	16
A133NW	0.0948	17	31	34	36	38	43	37	30	30	37	35	40	37	37	45	33	36	23	31	42	38	37	35	42	35	38	44	32	19	31	26	35	30	41	-	28	38	35	-	39	39	35
A133SE	0.06	8	14	15	16	17	19	17	13	13	16	16	18	17	17	20	15	16	10	14	19	17	16	16	18	16	17	20	14	9	14	12	16	14	18	-	13	17	16	-	17	17	15
A133SW	0.132	17	30	33	35	37	42	36	29	30	36	35	39	36	37	44	32	35	23	30	41	37	36	34	41	34	37	43	32	19	30	25	34	30	40	-	28	37	34	-	38	38	34
A133W1	0.0432	8	14	15	16	17	19	17	14	14	17	16	18	17	17	21	15	16	11	14	19	17	17	16	19	16	17	20	15	9	14	12	16	14	19	-	13	17	16	-	18	18	16
A133W2	0.06	8	14	15	16	17	19	17	13	13	16	16	18	17	17	20	15	16	10	14	19	17	16	16	18	16	17	20	14	9	14	12	16	14	18	-	13	17	16	-	17	17	15
A133W3	0.0616	13	23	25	26	28	32	27	22	22	27	26	29	27	28	33	24	26	17	23	31	28	27	26	31	26	28	32	24	14	23	19	26	22	30	-	21	28	26	-	29	29	26
A133W4	0.088	13	23	25	27	29	32	28	22	23	28	27	30	28	28	34	25	27	18	23	31	29	28	26	31	27	28	33	24	15	23	20	26	23	31	-	21	29	26	-	29	29	26
A134NE	0.047	5	9	10	11	11	13	11	9	9	11	10	12	11	11	13	10	11	7	9	12	11	11	10	12	10	11	13	10	6	9	8	10	9	12	-	8	11	10	-	12	11	10
A134NW	0.126	17	31	34	36	38	43	37	30	30	37	36	40	37	38	46	33	36	24	31	42	39	37	35	42	35	38	44	33	20	31	26	35	31	41	-	28	38	35	-	39	39	35
A134SE	0.025	5	10	10	11	12	13	11	9	9	11	11	12	11	11	14	10	11	7	9	13	12	11	11	13	11	12	13	10	6	9	8	11	9	13	-	9	12	11	-	12	12	11
A134SW	0.115	17	31	33	35	38	42	37	29	30	36	35	39	37	37	45	32	35	23	30	41	38	36	35	41	35	37	43	32	19	30	26	35	30	41	-	28	37	34	-	38	38	34
A135R1	0.023	5	9	10	10	11	12	11	9	9	11	10	12	11	11	13	10	10	7	9	12	11	11	10	12	10	11	13	9	6	9	7	10	9	12	-	8	11	10	-	11	11	10
A136NE	0.031	8	15	16	17	19	21	18	14	15	18	17	19	18	18	22	16	17	11	15	20	19	18	17	20	17	18	21	16	9	15	13	17	15	20	-	14	19	17	-	19	19	17
A136NE1	0.024	6	11	12	13	14	16	14	11	11	14	13	15	14	14	17	12	13	9	11	15	14	14	13	15	13	14	16	12	7	11	10	13	11	15	-	10	14	13	-	14	14	13
A136NW	0.039	15	27	29	31	33	37	32	26	26	32	31	35	32	32	39	29	31	20	27	36	33	32	30	36	30	33	38	28	17	27	22	30	26	36	-	24	33	30	-	34	33	30
A136NW1	0.025	7	12	13	14	15	16	14	11	12	14	14	15	14	14	17	13	14	9	12	16	15	14	14	16	14	15	17	12	7	12	10	14	12	16	-	11	15	14	-	15	15	13
A136NW2	0.033	12	23	25	26	28	31	27	22	22	27	26	29	27	27	33	24	26	17	23	31	28	27	26	30	26	28	32	24	14	23	19	26	22	30	-	21	28	26	-	28	28	25
A136R1	0.034	8	15	16	17	18	20	17	14	14	17	17	19	17	17	21	15	17	11	14	20	18	17	16	19	16	18	21	15	9	14	12	16	14	19	-	13	18	16	-	18	18	16
A136SE	0.028	6	11	12	13	14	15	13	11	11	13	13	14	13	13	16	12	13	8	11	15	14	13	13	15	13	14	16	12	7	11	9	13	11	15	-	10	14	13	-	14	14	12
A201NE	0.1387	48	87	94	100	107	120	104	83	85	103	99	112	104	105	127	92	100	66	87	117	107	103	98	116	99	106	123	91	54	87	73	99	85	115	-	79	107	98	-	109	108	97
A201S1	0.098	37	68	73	78	83	93	81	65	66	80	77	87	81	82	99	72	78	51	67	91	84	80	77	90	77	82	96	71	42	67	57	77	67	90	-	62	83	76	-	85	84	76
A201SW	0.133	50	91	98	104	111	125	108	87	88	107	103	117	108	109	132	96	105	69	90	122	112	108	103	121	103	110	129	95	57	90	76	103	89	120	-	82	111	102	-	114	113	102
A203NE	0.103	36	65	71	75	80	90	78	62	63	77	74	84	78	78	95	69	75	49	65	88	80	77	74	87	74	79	92	68	41	65	54	74	64	86	-	59	80	74	-	82	81	73
A203NW	0.098	32	59	63	67	72	81	70	56	57	69	67	75	70	71	86	62	68	44	58	79	72	70	66	78	66	71	83	61	37	58	49	66	57	78	-	53	72	66	-	74	73	66
A203R1	0.116	15	27	29	31	33	37	32	26	26	31	30	34	32	32	39	28	31	20	27	36	33	32	30	36	30	33	38	28	17	27	22	30	26	35	-	24	33	30	-	34	33	30
A203R2	0.088	15	27	29	31	33	36	32	25	26	31	30	34	32	32	39	28	31	20	26	36	33	32	30	35	30	32	38	28	17	26	22	30	26	35	-	24	33	30	-	33	33	30
A203R3	0.111	23	42	45	48	51	57	50	40	40	49	47	53	50	50	60	44	48	31	41	56	51	49	47	55	47	50	59	43	26	41	35	47	41	55	-	38	51	47	-	52	52	46
A204E1	0.1535	55	100	109	115	123	138	120	96	98	119	114	129	120	121	146	107	116	76	100	135	124	119	113	134	114	122	142	105	63	100	84	114	98	133	-	91	123	113	-	126	125	112
A204E2	0.1536	60	109	118	125	134	150	130	104	106	129	124	140	130	131	159	116	125	82	108	147	134	129	123	145	123	132	154	114	68	108	91	123	107	144	-	99	133	123	-	137	136	122
A204NE	0.096	37	68	74	78	84	94	81	65	66	80	78	88	81	82	99	72	78	52	68	92	84	81	77	91	77	83	96	71	43	68	57	77	67	90	-	62	84	77	-	86	85	76
A204NW	0.107	41	75	81	86	92	103	89	71	73	88	85	96	89	90	109	79	86	57	74	101	92	89	85	100	85	91	106	78	47	74	62	85	73	99	-	68	92	84	-	94	93	84
A204R1	0.136	28	51	55	58	62	70	61	48	49	60	58	65	61	61	74	54	58	38	50	68	63	60	57	68	57	62	72	53	32	51	42	57	50	67	-	46	62	57	-	64	63	57
A204R2	0.0665	14	26	28	30	32	36	31	25	25	31	30	33	31	31	38	28	30	20	26	35	32	31	29	35	29	32	37	27	16	26	22	29	26	34	-	24	32	29	-	33	32	29
A204R3	0.1353	29	53	57	61	65	73	63	51	52	62	60	68	63	64	77	56	61	40	53	71	65	63	60	71	60	64	75	55	33	53	44	60	52	70	-	48	65	60	-	67	66	59
A204R4	0.0808	18	33	36	38	41	45	40	32	32	39	38	43	40	40	48	35	38	25	33	45	41	39	37	44	37	40	47	35	21	33	28	37	32	44	-	30	40	37	-	42	41	37
A204R5	0.0731	15	27	30	31	34	38	33	26	27	32	31	35	33	33	40	29	31	21	27	37	34	32	31	36	31	33	39	29	17	27	23	31	27	36	-	25	33	31	-	34	34	31
A204SE	0.096	35	64	69	73	78	88	76	61	62	75	73	82	76	77	93	68	73	48	63	86	79	76	72	85	72	78	90	67	40	63	53	72	63	85	-	58	78	72	-	80	79	71
A205SE	0.109	38	70	76	81	86	97	84	67	68	83	80	90	84	85	102	75	81	53	70	95	87	83	79	94	80	85	100	73	44	70	59	80	69	93	-	64	86	79	-	88	87	79
A205SW	0.037	7	13	14	15	16	18	16	13	13	15	15	17	16	16	19	14	15	10	13	18	16	16	15	18	15	16	19	14	8	13	11	15	13	17	-	12	16	15	-	16	16	15
A206NE	0.138	48	88	95	101	108	121	105	84	85	104	100	113	105	106	128	93	101	67	88	118	108	104	99	117	100	107	124	92	55	88	73	100	86	117	-	80	108	99	-	110	109	98
A206R1	0.078	16	29	31	33	36	40	35	28	28	34	33	37	35	35	42	31	33	22	29	39	36	34	33	39	33	35	41	30	18	29	24	33	28	38	-	26	35	33	-	36	36	32
A208NW	0.183	65	119	128	136	146	163	142	113	115	140	135	152	141	143	173	126	137	90	118	160	146	141	134	158	134	144	168	124	74	118	99	134	116	157	-	108	145	134	-	149	148	133
A208R1	0.092	19	34	37	39	42	47	41	33	33	40	39	44	41	41	50	36	40	26	34	46	42	41	39	46	39	42	49	36	21	34	29	39	34	45	-	31	42	39	-	43	43	38
A208R2	0.11408	23	43	46	49	52	59	51	41	42	50	49	55	51	51	62	45	49	32	42	57	52	51	48	57	48	52	60	45	27	42	36	48	42	56	-	39	52	48	-

Table B4 - Subcatchments
Yearly Surface Evaporation Volumes (m³)

Node	Area	1967	1968	1969	1970	1971	1972	1973	1974	1975	1976	1977	1978	1979	1980	1981	1982	1983	1984	1985	1986	1987	1988	1989	1990	1991	1992	1993	1994	1995	1996	1997	1998	1999	2000	2001	2002	2003	2004	2005	2006	2007	Average
A216E1	0.0308	7	12	13	14	15	17	15	12	12	15	14	16	15	15	18	13	14	9	12	17	15	15	14	16	14	15	17	13	8	12	10	14	12	16	-	11	15	14	-	15	15	**14**
A216NE	0.0918	33	60	65	69	74	83	72	57	58	71	68	77	72	72	88	64	69	45	60	81	74	71	68	80	68	73	85	63	38	60	50	68	59	80	-	55	74	68	-	75	75	**67**
A216NW	0.0893	32	59	64	68	73	82	71	57	58	70	68	76	71	71	86	63	68	45	59	80	73	70	67	79	67	72	84	62	37	59	50	67	58	79	-	54	73	67	-	75	74	**66**
A216R1	0.048	9	17	18	20	21	23	20	16	17	20	19	22	20	21	25	18	20	13	17	23	21	20	19	23	19	21	24	18	11	17	14	19	17	23	-	16	21	19	-	22	21	**19**
A216R2	0.0407	8	14	16	17	18	20	17	14	14	17	17	19	17	17	21	15	17	11	14	19	18	17	16	19	16	18	20	15	9	14	12	16	14	19	-	13	18	16	-	18	18	**16**
A216R3	0.0597	14	26	28	29	31	35	31	24	25	30	29	33	31	31	37	27	29	19	25	34	32	30	29	34	29	31	36	27	16	25	21	29	25	34	-	23	31	29	-	32	32	**29**
A216R4	0.0548	13	24	25	27	29	32	28	22	23	28	27	30	28	28	34	25	27	18	23	32	29	28	27	31	27	29	33	25	15	23	20	27	23	31	-	21	29	27	-	30	29	**26**
A216SE	0.0888	34	62	67	71	76	86	74	59	60	73	71	80	74	75	91	66	71	47	62	84	77	74	70	83	70	75	88	65	39	62	52	70	61	82	-	56	76	70	-	78	77	**69**
A216SW	0.0924	36	66	71	75	80	90	78	63	64	77	75	84	78	79	96	70	76	50	65	88	81	78	74	87	74	80	93	68	41	65	55	74	64	87	-	60	80	74	-	82	82	**73**
A217NE	0.1516	54	99	107	114	122	137	119	95	96	117	113	128	118	120	145	105	114	75	99	134	122	118	112	132	112	121	141	104	62	99	83	112	97	132	-	90	122	112	-	125	124	**111**
A217NW	0.0784	28	51	56	59	63	71	61	49	50	61	59	66	61	62	75	55	59	39	51	69	63	61	58	68	58	62	73	54	32	51	43	58	50	68	-	47	63	58	-	65	64	**57**
A217R1	0.0605	12	22	23	25	26	30	26	21	21	25	25	28	26	26	31	23	25	16	21	29	26	26	24	29	24	26	30	22	13	21	18	24	21	28	-	20	26	24	-	27	27	**24**
A217R2	0.068	14	25	28	29	31	35	30	24	25	30	29	33	30	31	37	27	29	19	25	34	31	30	29	34	29	31	36	27	16	25	21	29	25	34	-	23	31	29	-	32	32	**28**
A217R3	0.0677	14	25	27	29	31	35	30	24	25	30	29	33	30	30	37	27	29	19	25	34	31	30	29	34	29	31	36	26	16	25	21	29	25	34	-	23	31	29	-	32	32	**28**
A217R4	0.0502	10	18	19	21	22	25	21	17	17	21	20	23	21	21	26	19	21	14	18	24	22	21	20	24	20	22	25	19	11	18	15	20	18	24	-	16	22	20	-	22	22	**20**
A217R5	0.0836	20	36	39	41	44	49	43	34	35	42	41	46	43	43	52	38	41	27	36	48	44	43	40	48	41	44	51	37	22	36	30	41	35	47	-	33	44	40	-	45	45	**40**
A217R6	0.0875	21	38	41	43	46	52	45	36	37	44	43	48	45	45	55	40	43	28	37	51	46	45	42	50	42	46	53	39	23	37	31	42	37	50	-	34	46	42	-	47	47	**42**
A217R7	0.086	20	37	40	42	45	51	44	35	36	43	42	47	44	44	54	39	42	28	37	50	45	44	42	49	42	45	52	39	23	37	31	42	36	49	-	33	45	42	-	46	46	**41**
A217R8	0.0631	15	27	29	31	33	37	32	26	26	32	31	35	32	33	39	29	31	21	27	36	33	32	31	36	31	33	38	28	17	27	23	31	27	36	-	25	33	31	-	34	34	**30**
A217SE	0.1515	59	108	116	123	132	148	128	103	104	127	123	138	128	129	157	114	124	81	107	145	133	128	121	143	122	131	152	112	67	107	90	122	106	143	-	98	132	121	-	135	134	**120**
A217SW	0.0784	32	58	63	66	71	80	69	55	56	68	66	74	69	70	84	61	67	44	58	78	71	69	65	77	65	70	82	60	36	58	48	65	57	77	-	52	71	65	-	73	72	**65**
A218NE	0.0513	17	32	34	36	39	44	38	30	31	37	36	41	38	38	46	34	36	24	31	43	39	38	36	42	36	38	45	33	20	31	26	36	31	42	-	29	39	36	-	40	39	**35**
A218SE	0.0517	19	35	38	40	43	48	42	34	34	41	40	45	42	42	51	37	40	27	35	47	43	42	40	47	40	43	50	37	22	35	29	40	34	47	-	32	43	40	-	44	44	**39**
A218W3	0.036	11	20	22	23	24	27	24	19	19	23	23	26	24	24	29	21	23	15	20	27	25	24	22	27	23	24	28	21	12	20	17	23	19	26	-	18	24	22	-	25	25	**22**
A220NE	0.0464	19	35	37	40	42	48	41	33	34	41	39	44	41	42	50	37	40	26	34	47	43	41	39	46	39	42	49	36	22	34	29	39	34	46	-	31	42	39	-	43	43	**39**
A220NW	0.0577	17	31	33	35	38	42	37	29	30	36	35	40	37	37	45	33	35	23	31	41	38	37	35	41	35	37	44	32	19	31	26	35	30	41	-	28	38	35	-	39	38	**34**
A220SW	0.1254	47	86	93	98	105	118	103	82	83	101	98	110	102	103	125	91	99	65	85	116	106	102	97	114	97	104	122	90	54	85	72	97	84	114	-	78	105	97	-	108	107	**96**
A221NE	0.0326	12	22	24	25	27	31	26	21	22	26	25	28	26	27	32	24	26	17	22	30	27	26	25	30	25	27	31	23	14	22	18	25	22	29	-	20	27	25	-	28	28	**25**
A221SE	0.0561	12	22	24	25	27	30	26	21	21	26	25	28	26	26	32	23	25	17	22	29	27	26	25	29	25	27	31	23	14	22	18	25	21	29	-	20	27	25	-	28	27	**24**
A222E1	0.0245	5	10	10	11	12	13	11	9	9	11	11	12	11	12	14	10	11	7	10	13	12	11	11	13	11	12	14	10	6	10	8	11	9	13	-	9	12	11	-	12	12	**11**
A222E2	0.0438	16	30	32	34	36	41	35	28	29	35	34	38	35	36	43	31	34	22	29	40	36	35	33	39	33	36	42	31	18	29	25	33	29	39	-	27	36	33	-	37	37	**33**
A222E3	0.0327	7	13	14	15	16	18	15	12	12	15	15	16	15	15	19	14	15	10	13	17	16	15	14	17	14	16	18	13	8	13	11	14	12	17	-	12	16	14	-	16	16	**14**
A222E4	0.1176	43	78	85	89	96	108	93	74	76	92	89	100	93	94	114	83	90	59	78	105	96	93	88	104	88	95	111	82	49	78	65	88	77	104	-	71	96	88	-	98	97	**87**
A222NE	0.0643	23	43	46	49	52	59	51	41	41	50	49	55	51	51	62	45	49	32	42	57	53	51	48	57	48	52	60	44	27	42	36	48	42	56	-	39	52	48	-	54	53	**48**
A222NW	0.1299	48	88	95	100	107	120	104	83	85	103	100	112	104	105	128	93	101	66	87	118	108	104	99	117	99	106	124	91	55	87	73	99	86	116	-	79	107	99	-	110	109	**98**
A222R1	0.0305	7	12	13	14	15	16	14	11	12	14	14	15	14	14	17	13	14	9	12	16	15	14	13	16	14	15	17	12	7	12	10	13	12	16	-	11	15	13	-	15	15	**13**
A222R2	0.0477	11	20	21	22	24	27	23	19	19	23	22	25	23	23	28	21	22	15	19	26	24	23	22	26	22	24	28	20	12	19	16	22	19	26	-	18	24	22	-	25	24	**22**
A222R3	0.0352	8	14	16	17	18	20	17	14	14	17	16	19	17	17	21	15	17	11	14	19	18	17	16	19	16	18	20	15	9	14	12	16	14	19	-	13	18	16	-	18	18	**16**
A222R4	0.1161	25	45	49	52	56	62	54	43	44	54	52	58	54	55	66	48	52	34	45	61	56	54	51	61	51	55	64	47	28	45	38	51	45	60	-	41	56	51	-	57	57	**51**
A222R5	0.095	21	39	42	45	48	53	46	37	38	46	44	50	46	47	57	41	45	29	39	52	48	46	44	52	44	47	55	41	24	39	32	44	38	52	-	35	48	44	-	49	48	**44**
A222R6	0.1075	24	44	48	51	54	61	53	42	43	52	50	57	53	53	64	47	51	33	44	59	54	52	50	59	50	53	62	46	28	44	37	50	43	58	-	40	54	50	-	56	55	**49**
A222R7	0.0913	20	37	40	43	46	51	45	36	36	44	43	48	45	45	54	40	43	28	37	50	46	44	42	50	42	45	53	39	23	37	31	42	37	49	-	34	46	42	-	47	47	**42**
A222R8	0.1058	24	43	47	50	53	60	52	41	42	51	49	56	52	52	63	46	50	33	43	58	53	51	49	58	49	53	61	45	27	43	36	49	42	57	-	39	53	49	-	55	54	**48**
A222R9	0.1117	24	44	47	50	54	60	52	42	43	52	50	56	52	52	64	46	50	33	43	59	54	52	49	58	49	53	62	46	27	44	36	49	43	58	-	40	53	49	-	55	54	**49**
A222SE	0.0762	27	49	53	56	60	68	59	47	48	58	56	63	59	59	72	52	57	37	49	66	61	58	56	66	56	60	70	51	31	49	41	56	48	65	-	45	60	56	-	62	61	**55**
A222SW	0.1301	47	86	94	99	106	119	103	82	84	102	98	111	103	104	126	92	100	65	86	116	107	103	98	115	98	105	122	90	54	86	72	98	85	115	-	78	106	97	-	109	108	**97**
A223NE	0.0668	24	44	48	51	54	61	53	42	43	52	50	57	53	53	65	47	51	33	44	60	55	52	50	59	50	54	63	46	28	44	37	50	43	59	-	40	54	50	-	56	55	**49**
A223SE	0.0645	24	44	47	50	54	60	52	42	43	52	50	56	52	53	64	47	51	33	44	59	54	52	50	59	50	53	62	46	27	44	37	50	43	58	-	40	54	49	-	55	55	**49**
A223SW	0.0711	22	39	43	45	48	54	47	37	38	46	45	51	47	47	57	42	45	30	39	53	48	47	44	52	45	48	56	41	25	39	33	44	38	52	-	36	48	44	-	49	49	**44**
A224NE	0.0624	21	38	41	43	46	52	45	36	37	45	43	49	45	46	55	40	44	29	38	51	47	45	43	51	43	46	54	39	24	38	32	43	37	50	-	34	46	43	-	48	47	**42**
A224NW	0.0992	38	69	74	79	84	95	82	65	67	81	78	88	82	83	100	73	79	52	68	92	85	81	78	91	78	83	97	72	43	68	57	78	67	91	-	62	84	77	-	86	85	**77**
A224R1	0.1117	23	42	45	48	51	57	50	40	41	49	48	54	50	50	61	44	48	32	41	56	51	50	47	56	47	51	59	44	26	42	35	47	41	55	-	38	51	47	-	52	52	**47**
A224R2	0.032	8	14	15	16	18	20	17	14	14	17	16	18	17	17	21	15	16	11	14	19	18	17	16	19	16	17	20	15	9	14	12	16	14	19	-	13	17	16	-	18	18	**16**
A224SW	0.0581	13	24	26	27	29	33	28	23	23	28	27	30	28	29	35	25	27	18	24	32	29	28	27	32	27	29	34	25	15	24	20	27	23	31	-	22	29	27	-	30	30	**27**
A225NE	0.0682	16	30	32	34	36	41	35	28	29	35	34	38	35	36	43	31	34	22	30	40	37	35	34	40	34	36	42	31	19	30	25	33	29	39	-	27	36	33	-	37	37	**33**
A225NW	0.1231	43	78	85	90	96	108	94	75	76	92	89	101	93	94	114	83	90	59	78	105	97	93	88	104	89	95	111	82	49	78	65	89	77	104	-	71	96	88	-	98	97	**88**
A225SE	0.0748	18	33	35	37	40	45	39	31	32	38	37	42	39	39	47	35	37	25	32	44	40	39	37	43	37	40	46	34	20	32	27	37	32	43	-	30	40	37	-	41	40	**36**
A226NE	0.068	17	30	33	35	37	41	36	29	29	36	34	39	36	36	44	32	35	23	30	41	37	36	34	40	34	37	43	31	19	30	25	34	30	40	-	27	37	34	-	38	38	**34**
A226NW	0.1354	49	89	96	102	109	122	106	85	86	105	101	114	106	107	129	94	102	67	88	120	109	105	100	118	100	108	126	93	56	88	74	100	87	118	-	81	109	100	-	112	110	**99**
A227NE	0.0287	7	13	14	15	16	18	15	12	12	15	15	16	15	15	19	14	15	10	13	17	16	15	14	17	14	16	18	13	8	13	11	14	12	17	-	12	16	14	-	16	16	**14**
A227NW	0.0646	16	29	31	33	35	39	34	27	28	34	33	37	34	34	42	30	33	22	29	39	35	34	32	38	32	35	41	30	18	29	24	32	28	38	-	26	35	32	-	36	36	**32**
A227SE	0.0679	16	30	33	35	37	41	36	29	29	36	34	39	36	36	44	32	35	23	30	41	37	36	34	40	34	37	43	31	19	30	25	34	29	40	-	27	37	34	-	38	38	**34**
A227SW	0.0984	35	63	69	73	78	87	76	61	62	75	72	82	76	76	93	67	73	48	63	85	78	75	72	85	72	77	90	66	40	63	53	72	62	84	-	58	78	72	-	80	79	**71**
A228NE	0.1045	37	68	74	78	84	94	82	65	67	81	78	88	82	82	100	73	79	52	68	92	84	81	77	91	78	83	97	71	43	68	57	78	67	91	-	62	84	77	-	86	85	**77**
A228NW	0.1369	50	91	98	104	111	125	108	87	88	107	103	117	108	109	132	96	105	69	90	122	112	108	103	121	103	110	129	95	57	90	76	103	89	120	-	82	111	102	-	114	113	**102**
A228R1	0.0632	14	25	27	28	30	34	30	24	24	29	28	32	30	30	36	26	28	19	25	33	30	29	28	33	28	30	35	26	15	25	21	28	24	33	-	22	30	28	-	31	31	**28**
A228R2	0.1043	23	43	46	49	52	59	51	41	42	50	49	55	51	51	62	45	49	32	42	57	53	51	48	57	48	52	60	45	27	43	36	48	42	57	-	39	52	48	-	54	53	**48**
A228SE	0.0654	15	27	30	31	34	38	33	26	27	32	31	35	33	33	40	29	31	21	27	37	34	32	31	36	31	33	39	28	17	27	23	31	27	36	-	25	33	31	-	34	34	**31**
A229N2	0.0307	12	21	23	25	26	29	26	20	21	25	24	28	26	26	31	23	25	16	21	29	26	25	24	29	24	26	30	22	13	21	18	24	21	28	-	19	26	24	-	27	27	**24**
A229NE	0.0591	16	29	32	34	36	40	35	28	29	35	34	38	35	35	43	31	34	22	29	40	36	35	33	39	33	36	42	31	18	29	25	33	29	39	-	27	36	33	-	37	37	**33**
A229NW	0.0601	23	42	45	48	52	58	50	40	41	50	48	54	50	51	61	45	48	32	42	57	52	50	47	56	48	51	59	44	26	42	35	48	41	56	-	38	51	47	-	53	52	**47**
A229R1	0.1224	29	52	57	60	64	72	63	50	51	62	60	67	62	63	76	55	60	40	52	70	64	62	59	70	59	64	74	55	33	52	44	59	51	69	-	47	64	59	-	66	65	**59**
A229R2	0.0799	18	33	35	38	40	45	39	31	32	39	37	42	39	39	48	35	38	25	33	44	40	39	37	44	37	40	46	34	20	33	27	37	32	43	-	30	40	37	-	41	41	**37**
A229SE	0.1047	38	69	74	79	84	95	82	65	67	81	78	88	82	83	100	73	79	52	68	92	85	81	77	91	78	83	97	72	43	68	57	78	67	91	-	62	84	77	-	86	85	**77**
A229SW	0.1401	51	93	101	106	114	128	111	89	90	110	106	119	111	112	135	99	107	70	93	125	115	110	105	124	105	113	132	97	58	93	78	105	91	123	-	84	114	105	-	117	116	**104**
A230NE	0.1102	40	73	79	84	90	101	87	70	71	86	83	94	87	88	107	78	84	55	73	98	90	87	83	97	83	89	103	76	46	73	61	83	72	97	-	66	90	82	-	92	91	**82**
A230NW	0.0787	24	44	47	50	53	60	52	42	42	51	50	56	52	52	63	46	50	33	43	59	54	52	49	58	49	53	62	45	27	43	36	49	43	58	-	40	53	49	-	55	54	**49**
A230R1	0.0373	8	14	15	16	17	19	17	13	14	16	16	18	17	17	20	15	16	11	14	19	17	17	16	19	16	17	20	15	9	14	12	16	14	18	-	13	17	16	-	18	17	**16**
A230R2	0.0266	6	12	13	14	15	16	14	11	12	14	13	15	14	14	17	13	14	9	12	16	15	14	13	16	13	14	17	12	7	12	10	13	12	16	-	11	14	13	-	15	15	**13**
A230R3	0.0632	14	25	27	28	30	34	30	24	24	29	28	32	30	30	36	26	28	19	25	33	30	29	28	33	28	30	35	26	15	25	21	28	24	33	-	22	30	28	-	31	31	**28**
A230R4	0.0984	22	40	44	46	49	55	48	38	39	47	46	52	48	48	59	43	46	30	40	54	50	48	45	54	46	49	57	42	25	40	34	46	39	53	-	37	49	45	-	51	50	**45**
A230WK	0.0128	3	6	6	7	7	8	7	5	6	7	6	7	7	7	8	6	7	4	6	8	7	7	6	8	6	7	8	6	4	6	5	6	6	8	-	5	7	6	-	7	7	**6**
A231N1	0.0597	16	29	32	33	36	40	35	28	28	34	33	38	35	35	43	31	34	22	29	39	36	35	33	39	33	36	41	30	18	29	24	33	29	39	-	27	36	33	-	37	36	**33**
A231NE	0.0603	23	42	46	48	52	58	50	40	41	50	48	54	50	51	61	45	49	32	42	57	52	50	48	56	48	51	60	44	26	42	35	48	41	56	-	38	52	47	-	53	52	**47**
A231NW	0.0466	18	33	35	37	40	45	39	31	32	38	37	42	39	39	47	35	37	25	32	44	40	39	37	43	37	40	46	34	20	32	27	37	32	43	-	30	40	37	-	41	40	**36**
A231R1	0.0242	6	11	12	12	13	15	13	10	10	13	12	14	13	13	16	11	12	8	11	14	13	13	12	14	12	13	15	11	7	11	9	12	11	14	-	10	13	12	-	14	13	**12**
A231R2	0.0334	8	14	15	16	17	19	16	13	13	16	16	18	16	16	20	15	16	10	14	18	17	16	15	18	15	17	19	14	9	14	11	15	13	18	-	12	17	15	-	17	17	**15**
A231R3	0.0319	7	13	14	14	15	17	15	12	12	15	14	16	15	15	18	13	14	9	12	17	15	15	14	17	14	15	18	13

Table B4 - Subcatchments
Yearly Surface Evaporation Volumes (m^3)

Node	Area	1967	1968	1969	1970	1971	1972	1973	1974	1975	1976	1977	1978	1979	1980	1981	1982	1983	1984	1985	1986	1987	1988	1989	1990	1991	1992	1993	1994	1995	1996	1997	1998	1999	2000	2001	2002	2003	2004	2005	2006	2007	Average
A303SW3	0.039	15	27	29	31	33	37	32	26	26	32	31	34	32	32	39	28	31	20	27	36	33	32	30	36	30	33	38	28	17	27	22	30	26	36	-	24	33	30	-	34	33	**30**
A306NE	0.111	40	73	79	83	89	100	87	69	71	86	83	93	87	87	106	77	84	55	72	98	89	86	82	97	82	88	103	76	45	72	61	82	71	96	-	66	89	82	-	91	90	**81**
A306NW	0.156	56	103	111	118	126	141	122	98	100	121	117	132	122	124	150	109	118	78	102	138	126	122	116	137	116	125	145	107	64	102	86	116	101	136	-	93	126	116	-	129	128	**115**
A306R2	0.127	30	54	59	62	67	75	65	52	53	64	62	70	65	65	79	57	62	41	54	73	67	64	61	72	61	66	77	57	34	54	45	61	53	72	-	49	66	61	-	68	68	**61**
A306SE	0.051	13	24	26	28	30	34	29	23	24	29	28	31	29	29	36	26	28	18	24	33	30	29	28	33	28	30	35	25	15	24	20	28	24	32	-	22	30	28	-	31	30	**27**
A306SW	0.051	13	24	26	28	30	34	29	23	24	29	28	31	29	29	36	26	28	18	24	33	30	29	28	33	28	30	35	25	15	24	20	28	24	32	-	22	30	28	-	31	30	**27**
A306SW1	0.064	24	44	48	50	54	61	53	42	43	52	50	57	52	53	64	47	51	33	44	59	54	52	50	59	50	53	62	46	28	44	37	50	43	58	-	40	54	50	-	55	55	**49**
A310NE	0.043	15	28	30	32	35	39	34	27	27	33	32	36	34	34	41	30	32	21	28	38	35	33	32	38	32	34	40	29	18	28	24	32	28	37	-	26	35	32	-	35	35	**32**
A310NE1	0.028	10	18	20	21	22	25	22	17	18	22	21	23	22	22	27	19	21	14	18	25	23	22	21	24	21	22	26	19	11	18	15	21	18	24	-	17	22	21	-	23	23	**20**
A310NW	0.054	19	35	38	41	43	49	42	34	34	42	40	46	42	43	52	38	41	27	35	48	44	42	40	47	40	43	50	37	22	35	30	40	35	47	-	32	43	40	-	45	44	**40**
A310R1	0.044	10	19	20	22	23	26	22	18	18	22	21	24	22	23	27	20	22	14	19	25	23	22	21	25	21	23	27	20	12	19	16	21	18	25	-	17	23	21	-	24	23	**21**
A310SE	0.034	12	22	24	25	27	31	27	21	22	26	25	29	26	27	32	24	26	17	22	30	27	26	25	30	25	27	31	23	14	22	19	25	22	29	-	20	27	25	-	28	28	**25**
A310SW	0.054	19	35	38	41	43	49	42	34	34	42	40	46	42	43	52	38	41	27	35	48	44	42	40	47	40	43	50	37	22	35	30	40	35	47	-	32	43	40	-	45	44	**40**
A311NE	0.12	43	79	85	90	96	108	94	75	76	93	89	101	94	94	114	83	90	59	78	106	97	93	89	105	89	95	111	82	49	78	66	89	77	104	-	71	96	89	-	99	98	**88**
A311NW	0.067	24	44	48	50	54	61	52	42	43	52	50	57	52	53	64	47	51	33	44	59	54	52	50	59	50	53	62	46	27	44	37	50	43	58	-	40	54	50	-	55	55	**49**
A311R1	0.107	25	46	49	52	56	63	55	44	45	54	52	59	55	55	67	48	53	35	45	62	56	54	52	61	52	56	65	48	29	45	38	52	45	60	-	41	56	51	-	58	57	**51**
A311SE	0.119	43	78	84	89	96	108	93	74	76	92	89	100	93	94	114	83	90	59	78	105	96	93	88	104	88	95	110	81	49	78	65	88	77	103	-	71	96	88	-	98	97	**87**
A311SW	0.067	24	44	48	50	54	61	52	42	43	52	50	57	52	53	64	47	51	33	44	59	54	52	50	59	50	53	62	46	27	44	37	50	43	58	-	40	54	50	-	55	55	**49**
APOND2	0.019	5	9	10	11	12	13	11	9	9	11	11	12	11	11	14	10	11	7	9	13	12	11	11	13	11	12	13	10	6	9	8	11	9	13	-	9	12	11	-	12	12	**11**
Total	**27.058**	**7,763**	**14,199**	**15,354**	**16,267**	**17,424**	**19,532**	**16,948**	**13,536**	**13,793**	**16,738**	**16,170**	**18,245**	**16,922**	**17,068**	**20,678**	**15,054**	**16,335**	**10,734**	**14,120**	**19,107**	**17,485**	**16,842**	**16,027**	**18,926**	**16,065**	**17,249**	**20,086**	**14,812**	**8,874**	**14,127**	**11,838**	**16,054**	**13,910**	**18,803**	**-**	**12,881**	**17,382**	**15,997**	**-**	**17,840**	**17,665**	**15,868**

Table B5 - Subcatchments
Yearly Surface Infiltration Volumes (m³)

Node	Area	1967	1968	1969	1970	1971	1972	1973	1974	1975	1976	1977	1978	1979	1980	1981	1982	1983	1984	1985	1986	1987	1988	1989	1990	1991	1992	1993	1994	1995	1996	1997	1998	1999	2000	2001	2002	2003	2004	2005	2006	2007	Average
A102NE	0.1339	170	237	227	242	224	340	304	151	226	213	268	252	340	253	369	247	244	189	208	371	274	278	233	296	237	279	293	234	202	217	166	200	193	244	-	241	252	252	-	329	251	**250**
A103NE	0.1353	121	169	162	173	159	243	217	108	161	152	191	180	242	180	263	176	174	135	148	264	196	198	167	211	169	199	209	167	144	155	118	143	138	174	-	172	180	179	-	235	179	**178**
A103SW	0.0582	65	91	87	93	86	130	116	58	87	82	103	97	130	97	142	95	94	73	80	142	105	106	90	114	91	107	112	90	77	83	63	77	74	94	-	92	97	96	-	126	96	**96**
A104NE	0.1378	139	193	186	198	183	278	248	124	185	174	219	206	278	206	302	202	200	155	170	303	224	227	191	242	194	228	239	191	165	177	135	164	158	199	-	197	206	206	-	269	205	**204**
A104NW	0.0471	100	140	134	143	132	201	179	89	133	126	158	149	201	149	218	146	144	112	122	219	162	164	138	175	140	165	173	138	119	128	98	118	114	144	-	142	149	149	-	194	148	**147**
A104SE	0.0528	53	74	71	76	70	106	95	47	71	67	84	79	106	79	116	77	77	59	65	116	86	87	73	93	74	87	92	73	63	68	52	63	61	76	-	75	79	79	-	103	79	**78**
A104SW	0.0473	46	64	61	65	60	92	82	41	61	57	72	68	92	68	100	67	66	51	56	100	74	75	63	80	64	75	79	63	55	59	45	54	52	66	-	65	68	68	-	89	68	**68**
A105NE	0.0577	65	90	86	92	85	129	115	57	86	81	102	96	129	96	140	94	93	72	79	141	104	106	89	113	90	106	111	89	77	83	63	76	73	93	-	92	96	96	-	125	95	**95**
A105NW	0.1045	90	125	120	128	118	180	160	80	119	112	141	133	179	133	195	130	129	100	110	196	145	147	123	157	125	147	155	124	107	115	87	106	102	129	-	127	133	133	-	174	132	**132**
A105SE	0.0582	65	91	87	93	86	130	116	58	87	82	103	97	130	97	142	95	94	73	80	142	105	106	90	114	91	107	112	90	77	83	63	77	74	94	-	92	97	96	-	126	96	**96**
A105SW	0.1044	70	98	94	100	92	140	125	62	93	88	110	104	140	104	152	102	101	78	86	153	113	115	96	122	98	115	121	97	83	90	68	83	80	101	-	99	104	104	-	136	103	**103**
A106N1	0.0845	63	88	84	90	83	126	113	56	84	79	99	94	126	94	137	92	91	70	77	138	102	103	87	110	88	103	109	87	75	81	61	74	72	91	-	89	94	93	-	122	93	**93**
A106N2	0.0773	52	72	69	74	68	104	93	46	69	65	82	77	104	77	113	75	75	58	63	113	84	85	71	91	72	85	90	72	62	66	51	61	59	75	-	74	77	77	-	101	77	**76**
A106NE	0.0626	58	81	78	83	77	117	104	52	78	73	92	87	117	87	127	85	84	65	71	127	94	95	80	102	81	96	101	81	69	75	57	69	66	84	-	83	87	87	-	113	86	**86**
A106NW	0.0644	53	74	71	75	70	106	95	47	70	66	83	78	106	79	115	77	76	59	65	115	85	86	73	92	74	87	91	73	63	68	52	62	60	76	-	75	79	78	-	102	78	**78**
A106R1	0.0465	158	216	207	213	201	305	272	135	200	197	247	229	307	237	325	232	230	177	190	347	253	245	214	273	221	251	274	214	184	200	154	185	179	224	-	225	235	209	-	311	232	**228**
A106R2	0.1506	528	728	697	727	676	1,033	919	457	681	655	826	768	1,044	786	1,111	772	762	591	643	1,159	852	836	716	918	734	845	908	725	628	671	513	618	600	749	-	748	782	726	-	1,036	776	**768**
A106SE	0.073	46	64	62	66	61	93	83	41	62	58	73	69	93	69	101	67	67	52	57	101	75	76	64	81	65	76	80	64	55	59	45	55	53	67	-	66	69	68	-	90	68	**68**
A106SW	0.0666	52	73	70	74	69	104	93	46	69	65	82	78	104	78	113	76	75	58	64	114	84	85	72	91	73	86	90	72	62	67	51	62	59	75	-	74	78	77	-	101	77	**77**
A108N1	0.052	112	157	150	161	148	226	201	100	150	141	177	167	225	167	245	164	162	126	138	246	182	184	155	196	157	185	194	155	134	144	110	133	128	162	-	160	167	167	-	218	166	**166**
A108NE	0.0393	38	53	51	54	50	76	68	34	51	48	60	57	76	57	83	55	55	43	47	83	62	62	52	67	53	63	66	53	45	49	37	45	43	55	-	54	57	56	-	74	56	**56**
A108NW	0.0287	55	76	73	78	72	109	98	49	73	68	86	81	109	81	119	79	79	61	67	119	88	89	75	95	76	90	94	75	65	70	53	64	62	78	-	77	81	81	-	106	81	**80**
A108R1	0.2228	774	1,064	1,019	1,058	988	1,509	1,343	666	993	960	1,210	1,123	1,526	1,154	1,617	1,133	1,119	867	939	1,699	1,245	1,217	1,048	1,344	1,077	1,235	1,333	1,061	915	982	752	907	879	1,097	-	1,098	1,146	1,051	-	1,520	1,137	**1,123**
A108R2	0.1143	399	549	526	547	510	779	693	344	513	495	624	579	788	595	836	584	576	447	485	876	643	629	541	693	555	637	687	548	473	507	388	468	454	566	-	565	591	545	-	783	586	**580**
A108SE	0.1135	127	177	170	181	167	255	227	113	169	159	200	189	254	189	276	185	183	142	155	277	205	208	175	222	177	209	219	175	151	162	124	150	145	182	-	180	189	188	-	246	188	**187**
A108SW	0.0507	72	100	96	102	95	144	129	64	96	90	113	107	144	107	156	105	103	80	88	157	116	117	99	125	100	118	124	99	85	92	70	85	82	103	-	102	107	106	-	139	106	**106**
A109NE	0.0292	62	87	83	89	82	124	111	55	83	78	98	92	124	92	135	90	89	69	76	135	100	102	85	108	87	102	107	86	74	79	61	73	71	89	-	88	92	92	-	120	92	**91**
A109NW	0.0533	56	78	74	79	73	112	100	50	74	70	88	83	111	83	121	81	80	62	68	121	90	91	77	97	78	91	96	77	66	71	54	66	63	80	-	79	83	82	-	108	82	**82**
A109SE	0.0936	105	146	140	149	138	210	187	93	139	131	165	156	210	156	228	152	151	117	128	229	169	171	144	183	146	172	181	144	125	134	102	124	119	150	-	149	156	155	-	203	155	**154**
A110NE	0.1026	100	139	133	142	131	199	178	89	132	125	157	148	199	148	216	145	143	111	122	217	161	163	137	174	139	163	172	137	118	127	97	117	113	143	-	141	148	147	-	193	147	**146**
A110NW	0.0866	81	113	108	115	106	162	144	72	108	101	127	120	162	120	176	117	116	90	99	176	131	132	111	141	113	133	139	111	96	103	79	95	92	116	-	115	120	120	-	157	119	**119**
A110R1	0.0385	132	180	172	178	167	255	227	112	167	164	205	191	257	197	272	193	191	148	158	289	211	205	178	228	184	209	228	179	154	167	128	154	149	187	-	187	195	175	-	259	193	**190**
A110R10	0.0379	129	176	168	173	163	249	222	110	163	160	201	187	250	193	265	189	187	144	155	283	206	200	174	223	180	205	223	175	150	163	126	151	146	183	-	184	191	170	-	254	189	**186**
A110R2	0.0357	122	167	160	165	155	237	211	104	155	152	191	177	238	183	252	179	177	137	147	268	196	190	165	211	171	194	211	166	143	155	119	143	138	173	-	174	181	163	-	240	179	**177**
A110R3	0.0389	133	182	174	180	169	258	229	114	169	165	208	193	259	199	275	195	193	149	160	292	213	207	180	230	186	212	230	181	155	169	130	156	151	189	-	189	198	177	-	262	195	**192**
A110R4	0.0471	161	221	211	217	205	312	278	137	204	200	251	234	314	241	332	236	234	180	194	353	258	251	218	279	225	256	279	219	188	204	157	189	183	228	-	229	239	214	-	317	236	**233**
A110R5	0.0452	153	210	201	207	195	297	265	131	194	191	240	223	298	230	316	225	224	172	184	337	246	239	208	266	215	244	266	208	179	195	150	180	174	218	-	219	228	203	-	303	225	**222**
A110R6	0.0418	142	195	186	191	180	275	245	121	180	177	222	206	276	213	292	208	207	159	171	312	227	221	192	246	199	226	246	192	166	180	139	166	161	201	-	203	211	188	-	280	208	**205**
A110R7	0.0456	155	212	203	209	197	300	267	132	196	193	242	225	301	232	319	227	225	174	186	340	248	241	210	268	217	246	269	210	181	196	151	181	175	220	-	221	230	205	-	305	227	**224**
A110R8	0.0591	201	275	262	270	255	388	346	171	254	250	314	291	390	301	413	294	292	225	241	441	321	312	272	348	281	319	348	272	234	254	196	235	227	285	-	286	299	266	-	396	294	**290**
A110R9	0.0323	111	152	146	151	141	216	192	95	141	138	173	161	217	166	230	163	161	124	134	244	178	173	150	192	155	177	192	152	130	141	108	130	126	157	-	158	165	149	-	218	163	**161**
A110SE	0.0587	50	70	67	72	66	101	90	45	67	63	79	75	101	75	109	73	73	56	62	110	81	82	69	88	70	83	87	69	60	64	49	59	57	72	-	71	75	75	-	98	74	**74**
A110SW	0.0824	89	124	119	127	117	179	159	79	119	112	140	132	178	133	194	130	128	99	109	195	144	146	123	156	124	146	154	123	106	114	87	105	101	128	-	126	133	132	-	173	132	**131**
A111NW	0.0905	91	127	122	130	120	183	163	81	121	114	144	135	182	136	198	133	131	102	111	199	147	149	125	159	127	150	157	126	108	117	89	108	104	131	-	129	136	135	-	177	135	**134**
A111SE	0.0869	81	113	108	116	107	162	145	72	108	102	128	120	162	121	176	118	117	90	99	177	131	132	111	141	113	133	140	112	96	104	79	96	92	116	-	115	120	120	-	157	120	**119**
A112NE	0.1184	124	172	165	176	163	248	221	110	165	155	195	184	247	184	269	180	178	138	151	270	200	202	170	216	173	203	213	171	147	158	121	146	141	178	-	175	184	183	-	240	183	**182**
A112NW	0.0531	50	69	66	71	65	99	89	44	66	62	78	74	99	74	108	72	71	55	61	108	80	81	68	86	69	81	85	68	59	63	48	58	56	71	-	70	74	73	-	96	73	**73**
A112R3	0.0559	188	258	247	253	239	364	324	161	238	236	295	274	364	284	387	277	276	211	226	415	302	292	256	326	264	300	328	255	219	239	185	221	213	268	-	270	281	248	-	372	276	**273**
A112R4	0.0976	333	457	437	451	424	647	576	285	423	415	521	484	651	500	689	489	485	374	402	732	535	520	452	578	466	531	577	454	390	423	325	391	378	473	-	475	495	444	-	657	490	**483**
A112SE	0.1192	111	155	149	159	146	223	199	99	148	139	175	165	222	165	242	162	160	124	136	243	180	182	153	194	155	183	192	153	132	142	108	131	126	160	-	158	165	165	-	216	164	**164**
A112SW	0.0441	35	48	46	49	45	69	62	31	46	43	54	51	69	51	75	50	50	39	42	75	56	56	47	60	48	57	60	48	41	44	34	41	39	50	-	49	51	51	-	67	51	**51**
A112WK	0.0389	99	138	132	141	130	198	177	88	131	124	155	147	198	147	215	144	142	110	121	215	159	161	136	172	138	162	170	136	117	126	96	116	112	142	-	140	147	146	-	191	146	**145**
A113R1	0.1345	467	642	615	639	596	910	810	402	599	580	730	678	920	697	976	684	676	523	566	1,026	752	734	633	811	651	745	805	641	552	593	454	548	531	662	-	663	692	634	-	918	686	**678**
A113R2	0.0836	286	392	374	386	363	554	493	244	362	356	446	415	557	428	590	419	416	320	344	627	458	445	387	495	399	455	495	389	334	362	279	335	324	405	-	407	424	380	-	563	419	**414**
A114NE	0.0293	24	33	32	34	32	48	43	21	32	30	38	36	48	36	52	35	35	27	29	52	39	39	33	42	34	39	41	33	29	31	23	28	27	35	-	34	36	36	-	47	35	**35**
A114R1	0.0675	227	312	298	305	289	439	392	194	287	285	356	330	440	342	467	334	333	255	273	501	365	353	309	394	319	362	396	307	264	289	223	267	257	324	-	326	339	299	-	450	334	**329**
A114R2	0.0534	184	252	241	249	234	357	317	157	234	228	287	266	359	275	381	269	266	206	222	403	295	287	249	318	256	292	317	251	215	233	179	215	209	260	-	261	272	246	-	361	270	**266**
A114R3	0.0736	251	345	330	340	320	488	434	215	319	313	393	365	491	377	520	369	366	282	303	552	403	392	341	436	352	400	435	342	294	319	245	295	285	357	-	358	374	335	-	496	369	**364**
A114R4	0.1447	491	674	643	662	624	950	847	419	622	613	768	713	954	738	1,011	721	716	551	590	1,079	788	763	666	851	688	782	853	666	573	623	480	576	556	698	-	701	731	650	-	969	721	**711**
A114SE	0.1052	137	191	184	196	181	275	246	122	183	172	216	204	275	204	299	200	198	153	168	300	222	225	189	240	192	226	237	189	163	176	134	162	156	197	-	195	204	203	-	266	203	**202**
A114SW	0.1843	192	268	257	275	253	386	344	171	256	241	303	286	385	286	419	280	277	215	235	420	311	315	265	336	269	316	332	266	229	246	188	227	219	277	-	273	286	285	-	373	284	**283**
A115NE	0.08	87	121	116	123	114	173	155	77	115	108	136	129	173	129	188	126	125	97	106	189	140	141	119	151	121	142	149	119	103	111	84	102	98	124	-	123	129	128	-	168	128	**127**
A115NW	0.0502	47	65	63	67	62	94	84	42	62	59	74	70	94	70	102	68	67	52	57	102	76	77	64	82	65	77	81	65	56	60	46	55	53	67	-	66	70	69	-	91	69	**69**
A115R1	0.0441	152	208	199	205	193	294	262	130	193	188	237	220	297	227	314	222	220	170	183	333	243	237	205	263	212	241	262	207	178	192	148	178	172	215	-	216	225	203	-	298	223	**220**
A115R2	0.0429	147	201	192	198	186	284	253	125	186	182	229	213	286	220	303	215	213	164	177	322	235	228	199	254	205	233	254	199	171	186	143	172	166	208	-	209	218	195	-	289	215	**212**
A115R3	0.0346	118	162	155	160	150	229	204	101	150	147	185	172	231	177	244	174	172	133	142	260	190	184	160	205	165	188	205	161	138	150	115	139	134	168	-	168	176	158	-	233	174	**171**
A115R4	0.0355	120	165	158	162	153	233	208	103	153	150	188	175	234	181	248	177	176	135	145	265	193	187	163	209	169	192	209	164	141	153	118	141	136	171	-	172	179	160	-	238	177	**174**
A115R5	0.05	170	233	222	229	216	329	293	145	215	212	265	246	330	255	349	249	247	191	204	373	272	264	230	294	238	270	294	230	198	215	166	199	192	241	-	242	253	225	-	335	249	**246**
A115R6	0.0405	137	189	180	185	175	266	237	117	174	171	215	200	267	206	283	202	200	154	165	302	220	214	186	238	192	219	239	186	160	174	134	161	156	195	-	196	205	182	-	271	202	**199**
A115SE	0.0218	45	62	60	64	59	90	80	40	60	56	70	66	89	67	97	65	64	50	55	98	72	73	61	78	62	74	77	62	53	57	44	53	51	64	-	63	66	66	-	87	66	**66**
A115SW	0.0392	82	114	110	117	108	164	147	73	109	103	129	122	164	122	178	119	118	91	100	179	132	134	113	143	114	135	141	113	97	105	80	97	93	118	-	116	122	121	-	159	121	**121**
A115W1	0.0351	48	68	65	69	64	97	87	43	64	61	76	72	97	72	105	70	70	54	59	106	78	79	67	85	68	80	84	67	58	62	47	57	55	70	-	69	72	72	-	94	72	**71**
A116E1	0.037	54	75	72	77	71	108	96	48	72	67	85	80	108	80	117	78	77	60	66	117	87	88	74	94	75	88	93	74	64	69	52	64	61	77	-	76	80	80	-	104	79	**79**
A116NE	0.081	88	122	117	125	115	175	157	78	117	110	138	130	175	130	190	127	126	98	107	191	142	143	120	153	122	144	151	121	104	112	85	103	100	126	-	124	130	130	-	170	129	**129**
A116NW	0.0753	76	106	101	108	100	152	136	68	101	95	119	113	152	113	165	110	109	85	93	165	123	124	104	132	106	125	131	105	90	97	74	90	86	109	-	108	113	112	-	147	112	**112**
A116R1	0.1084	380	524	501	523	487	743	662	329	491	471	595	552	752	566	800	556	548	425	463	834	613	601	515	661	528	608	654	522	452	483	369	445	432	539	-	539	563	522	-	745	559	**553**
A116R2	0.1022	363	502	480	504	467	713	635	316	473	450	569	529	721	540	771	530	523	406	443	796	587	579	493	632	504	583	624	500	435	462	352	425	412	516	-	514	537	508	-	710	534	**529**
A116R3	0.0796	274	375	359	371	348	531	473	234	348	340	427	397	536	409	567	401	397	307	330	601	439	427	371	474	382	436	473	374	321	347	267	321	311	388	-	389	406	367	-	538	402	**396**
A116R4	0.059	203	278	266	275	258	394	351	174	258	252	317	294	397	303	421	297	294	227	245	445	326	317	275	352	283	323	350	277	238	257	198	238	230	288	-	288	301	272	-	399	298	**294**
A116R5	0.069	238	327	313	325	304	464	413	205	305	296	373	346	469	356	496	349	345	267	289	523	383	374	323	414	332	380	411	326	281	303	232	279	271	338	-	339	353	322	-	469	350	**346**
A116R6	0.066	224	307	293	302	285	434	387	191	284	279	350	325	436	336	461	329	326	252	269	492	359	348	304	388	314	357	389	304	261	284	219	263	254	318	-	320	333	297	-	442	329	**324**
A116R7	0.062	210	289	275	284	267	407	363	179	266	262	329	305	409	316	433	309	307	236	253	462	337	327	285	365	295	335	365	286	245	267	206	247	238	299	-	301	313	279	-	415	309	**305**
A116SE	0.0791	106	148	142	152	140	213	190	95	141	133	167	158	213	158	231	155	153	119	130	232	172	174	146	185	148	175	183	147	126	136	104	125	121	153	-	151	158	157	-	206	157	**156**
A116SW	0.0762	54	75	72	77	71	108	97	48	72	68	85	80	108	80	117	79	78	60	66	118	87	88	74	94	75	89	93	74	64	69	53	64	61	78	-	77	80	80	-	105	80	**79**
A117NE	0.0839	88	122	117	125	115	176	157	78	117	110	138	130	175	130	191	127	126	98	107	191	142	143	120	153	122	144	151	121	104	112	85	103	100	126	-	124	130	130	-	170	129	**129**
A117NW	0.0821	83	115	111	118	109	166	148	74	110	104	130	123	165	123	180	120	119	92	101	180	134	135	114	144	115	136	143	114	98	106	81	98	94	119	-	117	123	123	-	160	122	**122**
A117R1	0.085	295	406	389	404	377	575	512	254	379	366	462	429	582	441	617	432	427	331	358	648	475	464	400	512	411	471	509	405	349	375	287	346	336	419	-	419	437	401	-	580	434	**428**
A117R2	0.062	212	291	278	286	269	411	366	181	269	264	331

Table B5 - Subcatchments
Yearly Surface Infiltration Volumes (m³)

Node	Area	1967	1968	1969	1970	1971	1972	1973	1974	1975	1976	1977	1978	1979	1980	1981	1982	1983	1984	1985	1986	1987	1988	1989	1990	1991	1992	1993	1994	1995	1996	1997	1998	1999	2000	2001	2002	2003	2004	2005	2006	2007	Average
A122NE	0.1276	143	199	191	204	188	286	255	127	190	179	225	212	286	212	311	208	206	159	175	312	231	233	196	249	199	235	246	197	170	183	139	169	162	205	-	203	212	212	-	277	211	**210**
A122R1	0.0732	260	359	344	361	335	511	455	227	339	322	408	379	516	386	552	380	374	291	318	570	420	414	353	452	361	417	447	358	311	331	252	305	295	369	-	368	385	364	-	508	382	**379**
A122R2	0.2135	759	1,048	1,003	1,053	976	1,489	1,327	661	987	940	1,189	1,105	1,506	1,127	1,610	1,107	1,092	848	926	1,662	1,226	1,209	1,031	1,319	1,053	1,218	1,303	1,044	908	966	735	888	861	1,077	-	1,073	1,123	1,061	-	1,482	1,115	**1,105**
A124NE	0.0469	61	85	82	87	81	123	110	55	82	77	96	91	123	91	133	89	88	68	75	134	99	100	84	107	85	101	106	84	73	78	60	72	70	88	-	87	91	91	-	119	90	**90**
A124NW	0.131	137	191	183	195	180	274	245	122	182	171	216	203	274	204	297	199	197	153	167	299	221	224	188	239	191	225	236	189	163	175	133	161	156	197	-	194	203	203	-	265	202	**201**
A124R1	0.0918	316	433	414	428	402	613	545	270	402	392	493	458	618	472	654	463	458	354	381	693	507	493	427	547	441	503	545	431	370	400	307	370	359	447	-	449	468	423	-	621	463	**457**
A124R2	0.136	470	645	618	640	599	914	814	403	600	584	735	682	923	702	978	689	681	526	569	1,032	755	737	636	815	655	749	811	643	553	597	458	551	535	666	-	667	697	634	-	924	690	**682**
A124SE	0.0469	40	56	54	57	53	81	72	36	54	50	63	60	80	60	87	59	58	45	49	88	65	66	55	70	56	66	69	55	48	51	39	47	46	58	-	57	60	60	-	78	59	**59**
A124SW	0.136	112	155	149	159	147	223	199	99	149	140	176	166	223	166	243	162	161	125	136	244	180	182	153	195	156	183	193	154	133	143	109	132	127	160	-	158	166	165	-	216	165	**164**
A125E1	0.0575	114	158	152	162	150	228	203	101	151	142	179	169	227	169	247	165	164	127	139	248	184	186	156	198	159	187	196	157	135	145	111	134	129	163	-	161	169	168	-	220	168	**167**
A125NE	0.0478	48	67	64	69	63	96	86	43	64	60	76	72	96	72	105	70	69	54	59	105	78	79	66	84	67	79	83	66	57	62	47	57	55	69	-	68	72	71	-	93	71	**71**
A125NW	0.0931	83	116	111	119	110	167	149	74	111	104	131	124	167	124	181	121	120	93	102	182	135	136	115	146	116	137	144	115	99	107	81	98	95	120	-	118	124	123	-	162	123	**123**
A125R1	0.1047	360	494	472	488	458	699	622	308	458	447	562	522	705	539	746	528	522	403	435	790	578	562	487	624	503	573	622	491	422	457	351	422	409	510	-	512	534	482	-	708	528	**521**
A125R2	0.1093	376	515	493	509	478	730	649	322	478	467	587	545	736	562	779	551	545	421	454	825	603	587	509	651	525	599	649	513	441	477	366	441	427	533	-	534	557	504	-	739	552	**544**
A125SE	0.0476	37	52	50	53	49	75	67	33	50	47	59	55	75	55	81	54	54	42	46	81	60	61	51	65	52	61	64	51	44	48	36	44	42	54	-	53	55	55	-	72	55	**55**
A125SW	0.0931	69	97	93	99	91	139	124	62	92	87	109	103	139	103	151	101	100	77	85	152	112	114	95	121	97	114	120	96	83	89	68	82	79	100	-	98	103	103	-	135	103	**102**
A126E1	0.0331	25	34	33	35	33	49	44	22	33	31	39	37	49	37	54	36	36	28	30	54	40	40	34	43	34	41	43	34	29	32	24	29	28	35	-	35	37	37	-	48	36	**36**
A126NE	0.0333	67	93	90	96	88	134	120	60	89	84	106	100	134	100	146	98	97	75	82	146	108	110	92	117	94	110	116	93	80	86	65	79	76	96	-	95	100	99	-	130	99	**99**
A126NW	0.0258	53	74	71	76	70	106	95	47	70	66	83	79	106	79	115	77	76	59	65	116	86	87	73	92	74	87	91	73	63	68	52	62	60	76	-	75	79	78	-	103	78	**78**
A126R1	0.0977	338	464	444	460	430	657	584	290	431	419	528	490	663	505	703	495	489	378	408	741	543	529	457	586	471	538	583	462	397	429	329	396	384	479	-	479	501	455	-	664	496	**490**
A126SE	0.032	48	67	64	68	63	96	85	43	64	60	75	71	96	71	104	69	69	53	58	104	77	78	66	83	67	78	82	66	57	61	47	56	54	69	-	68	71	71	-	93	70	**70**
A126SW	0.0259	41	57	54	58	53	81	73	36	54	51	64	60	81	60	88	59	58	45	50	89	66	66	56	71	57	67	70	56	48	52	40	48	46	58	-	58	60	60	-	79	60	**60**
A126W1	0.0767	66	92	88	94	87	132	118	59	88	82	104	98	132	98	143	96	95	73	80	144	106	108	90	115	92	108	114	91	78	84	64	78	75	95	-	93	98	97	-	128	97	**97**
A129NE	0.1715	179	250	240	256	236	359	320	159	239	224	282	266	358	267	389	261	258	200	219	391	290	293	246	313	250	294	309	247	213	229	175	211	204	257	-	254	266	265	-	347	264	**264**
A129NW	0.0657	66	92	89	94	87	133	118	59	88	83	104	98	132	98	144	96	95	74	81	144	107	108	91	116	92	109	114	91	79	85	64	78	75	95	-	94	98	98	-	128	98	**97**
A129R1	0.123	423	580	555	573	538	821	731	362	538	526	660	613	828	633	877	620	614	474	510	928	679	661	572	733	590	674	731	577	496	537	412	496	480	600	-	601	627	567	-	832	621	**613**
A129R2	0.1272	440	604	578	598	560	855	761	377	562	546	687	638	864	657	915	644	637	492	532	965	706	689	595	763	613	701	759	602	518	558	428	516	500	623	-	624	652	593	-	864	646	**637**
A129SE	0.097	152	212	203	217	200	304	272	135	202	191	249	226	304	226	330	221	219	170	186	332	246	248	209	265	212	250	262	210	181	194	148	179	173	218	-	216	226	225	-	295	224	**224**
A129SW	0.0642	65	90	86	92	85	130	116	58	86	81	102	96	129	96	141	94	93	72	79	141	105	106	89	113	90	106	112	89	77	83	63	76	74	93	-	92	96	96	-	125	95	**95**
A130NE	0.15	140	195	187	199	184	280	250	125	186	175	220	208	280	208	304	203	201	156	171	305	226	229	192	244	195	230	241	193	166	179	136	165	159	201	-	198	208	207	-	271	207	**206**
A130NW	0.047	49	68	66	70	65	98	88	44	65	62	77	73	98	73	107	71	71	55	60	107	79	80	67	86	68	81	85	68	58	63	48	58	56	71	-	70	73	73	-	95	72	**72**
A130R1	0.175	605	830	795	824	771	1,176	1,047	519	773	751	945	878	1,188	904	1,259	886	876	677	732	1,327	972	948	819	1,049	843	964	1,044	828	712	768	589	709	688	858	-	859	897	816	-	1,189	888	**877**
A130SE	0.147	159	222	213	227	209	319	284	142	212	199	250	236	318	237	346	231	229	177	194	347	257	260	219	278	222	261	274	219	189	203	155	188	181	228	-	226	236	236	-	308	235	**234**
A130SW	0.055	51	71	69	73	68	103	92	46	68	64	81	76	103	76	111	75	74	57	63	112	83	84	71	90	72	84	88	71	61	66	50	61	58	74	-	73	76	76	-	99	76	**75**
A132NE	0.029	59	81	80	85	78	119	106	53	79	75	94	88	119	89	129	87	86	66	73	130	96	97	82	104	83	98	103	82	71	76	58	70	68	85	-	84	88	88	-	115	88	**88**
A132NW	0.028	48	67	64	69	63	96	86	43	64	60	76	71	96	71	104	70	69	54	59	105	78	79	66	84	67	79	83	66	57	61	47	57	55	69	-	68	71	71	-	93	71	**71**
A132NW	0.033	26	36	35	37	34	52	46	23	34	32	41	38	52	38	56	38	37	29	32	56	42	42	36	45	36	42	45	36	31	33	25	31	29	37	-	37	38	38	-	50	38	**38**
A132R1	0.088	304	418	400	414	388	592	526	261	388	378	475	441	597	455	633	446	441	341	368	668	489	477	412	528	424	485	525	416	358	386	296	357	346	431	-	432	451	410	-	598	447	**441**
A132R2	0.1119	387	531	508	526	493	752	670	332	494	480	604	561	760	578	805	566	560	433	468	849	621	606	524	671	539	617	667	529	455	491	376	454	440	548	-	549	573	522	-	760	568	**561**
A132R3	0.1145	394	540	516	534	501	764	680	337	501	489	615	571	771	589	816	577	571	441	475	864	632	615	533	682	550	627	680	537	462	499	384	462	447	558	-	560	584	528	-	774	578	**570**
A132R4	0.101	347	476	456	471	442	674	600	297	442	431	542	504	680	519	720	509	504	389	419	762	557	542	470	602	485	553	600	474	407	441	338	407	394	492	-	494	515	465	-	683	510	**503**
A132SE	0.033	53	74	71	75	70	106	95	47	70	66	83	79	106	79	115	77	76	59	65	116	86	87	73	92	74	87	91	73	63	68	52	62	60	76	-	75	79	78	-	103	78	**78**
A132SW	0.048	54	75	72	77	71	108	96	48	72	67	85	80	107	80	117	78	77	60	66	117	87	88	74	94	75	88	93	74	64	69	52	63	61	77	-	76	80	80	-	104	79	**79**
A133NE	0.0433	102	142	136	145	134	204	182	91	136	128	160	151	204	151	221	148	146	114	124	222	164	166	140	178	142	167	176	140	121	130	99	120	116	146	-	144	151	151	-	197	150	**150**
A133NW	0.0948	223	311	298	318	293	447	399	198	297	279	351	331	446	331	484	324	321	249	272	486	360	364	306	389	311	366	384	307	265	285	217	263	253	320	-	316	331	330	-	432	329	**328**
A133SE	0.06	166	231	222	237	218	333	296	147	221	208	261	246	332	246	360	241	238	185	202	361	268	271	228	289	231	273	286	228	197	212	161	195	188	238	-	236	246	246	-	321	245	**244**
A133SW	0.132	364	508	487	521	480	733	652	324	486	457	574	542	730	542	793	530	525	407	445	795	589	596	501	636	508	600	629	503	433	466	355	430	415	523	-	519	542	541	-	707	538	**537**
A133W1	0.0432	102	142	136	145	134	204	182	90	135	127	160	151	203	151	221	148	146	113	124	222	164	166	140	177	142	167	175	140	121	130	99	120	116	146	-	144	151	150	-	197	150	**149**
A133W2	0.06	166	231	222	237	218	333	296	147	221	208	261	246	332	246	360	241	238	185	202	361	268	271	228	289	231	273	286	228	197	212	161	195	188	238	-	236	246	246	-	321	245	**244**
A133W3	0.0616	133	186	178	190	175	267	238	119	177	167	210	198	267	198	290	194	192	149	163	291	215	218	183	233	186	219	230	184	158	170	130	157	152	191	-	189	198	198	-	258	197	**196**
A133W4	0.088	230	320	307	328	302	462	411	205	306	288	362	342	460	342	500	334	331	256	281	501	371	376	316	401	321	378	396	317	273	294	224	271	261	330	-	327	342	341	-	446	339	**338**
A134NE	0.047	137	191	183	196	180	276	245	122	182	171	215	204	274	203	298	199	197	153	167	298	221	224	188	239	191	226	236	189	163	175	133	161	156	196	-	195	203	203	-	265	202	**201**
A134NW	0.126	338	472	453	484	445	680	606	301	451	424	533	503	678	503	736	492	487	378	414	738	547	553	465	591	472	557	584	467	402	433	330	399	385	486	-	481	503	502	-	656	500	**498**
A134SE	0.025	53	74	71	76	70	107	95	47	71	67	84	79	106	79	116	77	77	59	65	116	86	87	73	93	74	87	92	73	63	68	52	63	60	76	-	75	79	79	-	103	78	**78**
A134SW	0.115	300	419	402	429	395	603	537	267	400	376	473	447	602	447	653	437	432	335	367	655	485	491	413	524	419	494	518	414	357	384	293	354	342	431	-	427	446	445	-	582	443	**442**
A135R1	0.023	79	108	104	107	101	154	137	68	101	98	123	115	155	118	164	116	115	89	95	174	127	123	107	137	110	126	137	108	93	100	77	93	90	112	-	112	117	106	-	156	116	**115**
A136NE	0.031	52	73	70	74	68	104	93	46	69	65	82	77	104	77	113	76	75	58	64	114	84	85	72	91	73	85	90	72	62	67	51	61	59	75	-	74	77	77	-	101	77	**77**
A136NE1	0.024	41	57	55	59	54	83	74	37	55	52	65	61	82	61	90	60	59	46	50	90	67	67	57	72	57	68	71	57	49	53	40	49	47	59	-	58	61	61	-	80	61	**61**
A136NW	0.039	33	47	45	48	44	67	60	30	45	42	53	50	67	50	73	49	48	37	41	73	54	55	46	58	47	55	58	46	40	43	33	39	38	48	-	47	50	49	-	65	49	**49**
A136NW1	0.025	43	60	57	61	56	86	77	38	57	54	68	64	86	64	93	62	62	48	52	94	69	70	59	75	60	70	74	59	51	55	42	51	49	62	-	61	64	64	-	83	63	**63**
A136NW2	0.033	28	39	38	40	37	57	51	25	38	35	45	42	57	42	62	41	41	32	35	62	46	46	39	49	39	46	49	39	34	36	28	33	32	41	-	40	42	42	-	55	42	**42**
A136R1	0.034	115	158	151	155	147	223	199	98	146	144	180	168	224	173	238	169	168	130	139	254	185	179	156	200	162	184	200	156	135	147	113	135	131	164	-	165	172	153	-	228	169	**167**
A136SE	0.028	57	80	77	82	76	115	103	51	76	72	90	85	115	85	125	84	83	64	70	125	93	94	79	100	80	94	99	79	68	73	56	68	65	83	-	81	85	85	-	111	85	**85**
A201NE	0.1387	155	216	208	221	204	311	278	138	207	195	244	231	311	231	337	226	223	173	190	339	251	254	213	271	217	255	268	214	185	198	151	183	177	223	-	220	231	230	-	301	229	**228**
A201S1	0.098	84	117	112	120	111	168	150	75	112	105	132	125	168	125	183	122	121	94	103	183	136	137	116	147	117	138	145	116	100	107	82	99	96	121	-	119	125	124	-	163	124	**124**
A201SW	0.133	119	166	159	170	157	238	213	106	159	149	188	177	238	177	259	173	171	133	146	260	192	195	164	208	166	196	205	164	142	152	116	141	135	171	-	169	177	176	-	231	176	**175**
A203NE	0.103	115	161	154	165	152	232	206	103	154	144	182	171	231	171	251	168	166	129	141	252	186	188	158	201	161	190	199	159	137	147	112	136	131	166	-	164	171	171	-	224	170	**170**
A203NW	0.098	121	168	162	172	159	242	216	107	161	151	190	179	241	179	262	175	174	135	147	263	195	197	166	211	168	198	208	166	143	154	118	142	137	173	-	171	179	179	-	234	178	**178**
A203R1	0.116	416	574	550	579	537	818	729	363	544	515	652	607	826	617	887	605	597	464	507	910	672	665	565	723	576	669	713	572	499	530	403	487	471	591	-	587	615	587	-	811	611	**606**
A203R2	0.088	310	428	409	428	398	607	541	269	401	384	485	451	614	461	654	453	447	347	378	680	500	492	420	539	431	496	533	426	369	394	301	363	352	440	-	439	459	429	-	607	456	**451**
A203R3	0.111	384	527	504	522	489	746	664	329	490	476	599	557	754	573	798	562	556	430	464	842	616	601	519	666	535	612	662	525	452	487	373	450	436	544	-	545	569	517	-	754	563	**556**
A204E1	0.1535	155	215	207	220	203	310	276	138	206	194	244	229	309	230	336	225	223	172	189	337	250	253	213	270	216	254	267	213	184	198	151	182	176	222	-	219	230	229	-	300	228	**227**
A204E2	0.1536	120	168	161	171	158	241	215	107	160	151	190	179	241	179	262	175	173	134	147	263	194	197	165	210	168	197	208	166	143	154	117	142	137	173	-	170	179	178	-	233	178	**177**
A204NE	0.096	75	105	101	107	99	151	134	67	100	94	118	112	151	112	163	109	108	84	92	164	122	123	103	131	105	123	130	104	89	96	73	89	86	108	-	107	112	111	-	146	111	**111**
A204NW	0.107	88	122	117	125	116	176	157	78	117	110	138	130	176	131	191	128	126	98	107	192	142	144	121	153	123	144	151	121	104	112	86	104	100	126	-	124	131	130	-	170	130	**129**
A204R1	0.136	470	645	618	640	599	914	814	403	600	584	735	682	923	702	978	689	681	526	569	1,032	755	737	636	815	655	749	811	643	553	597	458	551	535	666	-	667	697	634	-	924	690	**682**
A204R2	0.0665	229	314	300	310	291	444	395	196	291	284	357	332	448	342	474	335	332	256	276	502	367	357	309	396	319	364	395	312	268	290	223	268	260	324	-	325	339	306	-	450	336	**331**
A204R3	0.1353	465	638	610	630	592	903	804	398	592	578	727	675	911	696	964	682	675	521	562	1,021	747	727	630	806	649	741	804	635	546	590	453	546	528	659	-	661	690	623	-	915	683	**674**
A204R4	0.0808	276	379	362	373	351	535	477	236	350	344	431	401	539	414	570	405	402	310	332	606	443	430	374	478	386	440	478	376	323	350	269	324	313	392	-	393	410	368	-	544	405	**400**
A204R5	0.0731	253	347	332	344	322	492	437	217	323	314	395	367	496	378	526	370	366	283	306	555	406	396	342	438	352	403	436	346	297	321	246	296	287	358	-	359	375	341	-	497	371	**366**
A204SE	0.096	93	130	125	133	123	186	167	83	124	117	147	138	186	139	202	135	134	104	114	203	150	152	128	163	130	153	161	128	111	119	91	110	106	134	-	132	138	138	-	181	137	**137**
A205SE	0.109	114	159	152	162	150	228	204	101	152	143	179	169	228	169	247	166	164	127	139	248	184	186	157	199	159	187	196	157	135	146	111	134	130	164	-	161	169	169	-	221	168	**168**
A205SW	0.037	83	115	111	118	109	166	148	74	110	104	130	123	166	123	180	120	119	92	101	181	134	135	114	145	116	136	143	114	98	106	81	98	94	119	-	118	123	123	-	161	122	**122**
A206NE	0.138	149	208	200	213	196	299	267	133	199	187	235	222	299	222	325	217	215	167	182	326	241	244	205	261	208	245	258	206	178	191	146	176	170	214	-	212	222	221	-	290	220	**220**
A206R1	0.078	270	370	354	367	344	524	466	232	344	335	421	392	529	404	561	395	391	302	326	592	434	422	365	468	377	430	466	369	317	343	263	317	307	383	-	383	400	364	-	530	396	**391**
A208NW	0.183	191	266	256	273	252	383	342	170	255	240	301	284	383	284	416	278	275	213	234	417	309	313	263	334	267	314	330	264	227	244	186	226	217	275	-	271	284	283	-	371	282	**281**
A208R1	0.092	318	437	418	433	405	619	550	273	406	395	497	461	625	475	662	466	461	356	385	698	511	498	431	552	443	507	549	435	374	404	310	373	362	451	-	451	471	429	-	625	467	**461**
A208R2	0.11408	394	541	518	536	503	767	683	338	504	490	616	572	775	589	821	578	571	442	477

Table B5 - Subcatchments
Yearly Surface Infiltration Volumes (m³)

Node	Area	1967	1968	1969	1970	1971	1972	1973	1974	1975	1976	1977	1978	1979	1980	1981	1982	1983	1984	1985	1986	1987	1988	1989	1990	1991	1992	1993	1994	1995	1996	1997	1998	1999	2000	2001	2002	2003	2004	2005	2006	2007	Average
A216E1	0.0308	63	88	85	90	83	127	113	56	84	79	100	94	126	94	137	92	91	71	77	138	102	103	87	110	88	104	109	87	75	81	62	75	72	91	-	90	94	94	-	123	93	**93**
A216NE	0.0918	92	129	124	132	122	185	165	82	123	116	146	137	185	138	201	134	133	103	113	202	149	151	127	161	129	152	159	128	110	118	90	109	105	133	-	131	137	137	-	179	136	**136**
A216NW	0.0893	87	121	116	124	114	173	155	77	115	109	136	129	173	129	188	126	125	97	106	189	140	142	119	151	121	142	149	119	103	111	84	102	99	124	-	123	129	128	-	168	128	**127**
A216R1	0.048	167	229	219	228	213	325	289	143	214	207	261	242	329	249	348	244	241	187	202	366	268	262	226	289	232	266	287	228	197	212	162	195	190	236	-	237	247	226	-	328	245	**242**
A216R2	0.0407	141	194	186	193	180	275	245	122	181	175	221	205	279	211	295	207	204	158	171	310	227	222	191	245	197	226	244	194	167	180	137	166	161	200	-	201	209	192	-	278	208	**205**
A216R3	0.0597	203	278	265	273	257	393	350	173	257	252	317	294	394	304	417	297	295	228	244	445	325	315	275	351	284	323	351	275	237	257	198	237	230	288	-	289	301	269	-	400	297	**293**
A216R4	0.0548	186	255	243	251	236	360	321	159	236	232	291	270	362	279	383	273	271	209	224	409	298	289	252	322	260	296	323	252	217	236	182	218	211	264	-	266	277	246	-	367	273	**269**
A216SE	0.0888	73	102	97	104	96	146	130	65	97	91	115	108	146	108	158	106	105	81	89	159	118	119	100	127	102	120	126	101	87	93	71	86	83	105	-	103	108	108	-	141	108	**107**
A216SW	0.0924	72	101	97	103	95	145	129	64	96	91	114	108	145	108	157	105	104	81	88	158	117	118	100	126	101	119	125	100	86	93	71	85	82	104	-	103	108	107	-	140	107	**107**
A217NE	0.1516	153	213	204	218	201	306	273	136	203	191	241	227	305	227	332	222	220	170	187	333	247	250	210	267	213	251	263	211	182	195	149	180	174	219	-	217	227	226	-	296	225	**225**
A217NW	0.0784	79	110	106	113	104	158	141	70	105	99	124	117	158	117	172	115	114	88	97	172	128	129	109	138	110	130	136	109	94	101	77	93	90	113	-	112	117	117	-	153	117	**116**
A217R1	0.0605	210	289	277	287	268	409	364	181	269	261	329	305	414	314	439	308	304	235	255	461	338	330	285	365	293	335	362	288	248	267	204	246	239	298	-	298	311	285	-	413	309	**305**
A217R2	0.068	235	323	309	320	300	457	407	202	300	292	367	341	462	351	489	344	340	263	284	516	378	368	318	408	328	375	405	322	277	298	229	276	267	333	-	334	348	317	-	462	345	**341**
A217R3	0.0677	234	321	308	318	298	455	405	201	299	290	366	339	460	350	487	343	339	262	283	514	376	367	317	406	326	373	404	320	275	297	228	274	266	332	-	332	347	316	-	460	344	**339**
A217R4	0.0502	174	240	230	238	223	340	302	150	224	216	273	253	344	260	364	255	252	195	211	383	281	274	236	303	243	278	300	239	206	221	169	204	198	247	-	247	258	237	-	343	256	**253**
A217R5	0.0836	284	389	371	383	360	550	490	242	360	354	443	412	552	426	584	416	413	319	341	623	455	441	385	492	397	452	492	385	331	360	277	332	321	403	-	405	422	376	-	560	416	**411**
A217R6	0.0875	297	407	389	400	377	575	513	253	377	370	464	431	578	446	611	436	432	333	357	653	476	462	402	515	416	473	515	403	347	377	290	348	336	422	-	424	442	394	-	586	436	**430**
A217R7	0.086	292	400	382	394	371	566	504	249	370	364	456	424	568	438	601	428	425	328	351	641	468	454	396	506	409	465	506	396	341	370	285	342	331	414	-	417	434	387	-	576	428	**422**
A217R8	0.0631	214	294	280	289	272	415	370	183	272	267	335	311	417	321	441	314	312	240	257	471	343	333	290	371	300	341	372	291	250	272	209	251	243	304	-	306	319	284	-	423	314	**310**
A217SE	0.1515	119	165	159	169	156	238	212	106	158	149	187	176	238	177	258	173	171	132	145	259	192	194	163	207	166	195	205	164	141	152	116	140	135	170	-	168	176	176	-	230	175	**175**
A217SW	0.0784	53	73	70	75	69	105	94	47	70	66	83	78	105	78	114	77	76	59	64	115	85	86	72	92	73	86	91	73	63	67	51	62	60	76	-	75	78	78	-	102	78	**77**
A218NE	0.0513	59	83	79	85	78	119	106	53	79	74	93	88	119	88	129	86	85	66	73	129	96	97	82	104	83	97	102	82	71	76	58	70	67	85	-	84	88	88	-	115	88	**87**
A218SE	0.0517	46	64	62	66	61	93	83	41	62	58	73	69	93	69	101	67	67	52	57	101	75	76	64	81	65	76	80	64	55	59	45	55	53	66	-	66	69	68	-	90	68	**68**
A218W3	0.036	51	71	68	73	67	102	91	45	68	64	80	76	102	76	111	74	73	57	62	111	82	83	70	89	71	84	88	70	61	65	50	60	58	73	-	72	76	76	-	99	75	**75**
A220NE	0.0464	29	41	39	42	39	59	53	26	39	37	46	44	59	44	64	43	42	33	36	64	48	48	40	51	41	48	51	41	35	38	29	35	33	42	-	42	44	44	-	57	43	**43**
A220NW	0.0577	86	120	115	123	113	172	154	77	115	108	136	128	172	128	187	125	124	96	105	188	139	141	118	150	120	141	149	119	102	110	84	102	98	124	-	122	128	127	-	167	127	**127**
A220SW	0.1254	112	156	150	160	148	225	201	100	150	141	177	167	225	167	244	163	162	125	137	245	181	184	154	196	157	185	194	155	134	143	109	133	128	161	-	159	167	166	-	218	166	**165**
A221NE	0.0326	29	41	39	42	38	58	52	26	39	37	46	43	58	43	63	42	42	33	36	64	47	48	40	51	41	48	50	40	35	37	28	34	33	42	-	41	43	43	-	57	43	**43**
A221SE	0.0561	117	163	157	167	154	235	210	104	156	147	185	174	235	174	255	170	169	131	143	256	189	192	161	205	163	193	202	162	139	150	114	138	133	168	-	166	174	174	-	227	173	**172**
A222E1	0.0245	51	71	68	73	67	103	92	46	68	64	81	76	102	76	111	74	74	57	63	112	83	84	70	89	71	84	88	71	61	65	50	60	58	74	-	73	76	76	-	99	76	**75**
A222E2	0.0438	41	57	55	58	54	82	73	36	54	51	64	61	82	61	89	59	59	46	50	89	66	67	56	71	57	67	70	56	49	52	40	48	46	59	-	58	61	61	-	79	60	**60**
A222E3	0.0327	68	95	91	97	90	137	122	61	91	86	108	101	137	102	149	99	98	76	84	149	110	112	94	119	95	112	118	94	81	87	67	81	78	98	-	97	102	101	-	132	101	**101**
A222E4	0.1176	114	159	153	163	150	228	204	102	152	143	180	169	228	170	248	166	164	127	139	249	184	186	157	199	159	187	197	157	136	146	111	135	130	164	-	162	170	169	-	221	168	**168**
A222NE	0.0643	62	87	83	89	82	125	111	56	83	78	98	93	125	93	136	91	90	70	76	136	101	102	86	109	87	102	108	86	74	80	61	74	71	90	-	88	93	92	-	121	92	**92**
A222NW	0.1299	121	169	162	173	159	243	217	108	161	152	191	180	242	180	263	176	174	135	148	264	196	198	167	211	169	199	209	167	144	155	118	143	138	174	-	172	180	179	-	235	179	**178**
A222R1	0.0305	105	144	138	142	134	204	181	90	134	130	164	152	205	157	217	154	152	118	127	230	168	164	142	182	146	167	181	143	123	133	102	123	119	149	-	149	156	141	-	206	154	**152**
A222R2	0.0477	163	224	214	220	207	316	281	139	207	203	255	237	318	244	337	239	237	183	196	358	261	254	221	282	228	260	282	222	191	207	159	191	185	231	-	232	242	217	-	321	239	**236**
A222R3	0.0352	120	165	158	162	153	233	208	103	153	150	188	175	235	180	248	177	175	135	145	264	193	187	163	208	168	192	208	164	141	153	117	141	136	171	-	171	179	160	-	237	177	**174**
A222R4	0.1161	399	548	524	541	508	775	690	342	508	496	623	579	781	597	828	585	579	447	482	876	641	623	540	692	557	636	690	545	468	506	389	468	453	566	-	567	592	535	-	785	586	**578**
A222R5	0.095	325	445	425	439	413	629	560	277	412	404	507	471	633	486	670	476	472	364	391	713	521	506	440	563	454	517	562	442	380	412	317	381	368	461	-	462	482	432	-	639	477	**470**
A222R6	0.1075	367	504	481	496	467	712	634	314	466	457	574	533	717	550	759	539	534	412	442	806	589	572	498	637	514	585	636	500	430	466	358	431	417	521	-	523	546	489	-	724	539	**532**
A222R7	0.0913	312	428	409	421	397	605	538	266	396	388	487	453	609	468	644	458	454	350	376	685	500	486	423	541	436	497	540	424	365	396	304	366	354	443	-	444	463	416	-	615	458	**452**
A222R8	0.1058	361	496	474	488	460	701	624	309	459	450	565	525	705	542	747	531	526	405	435	794	580	563	490	627	506	576	626	492	423	459	353	424	410	513	-	515	537	482	-	712	531	**523**
A222R9	0.1117	384	527	504	520	489	746	664	329	489	477	600	557	752	575	796	563	557	430	464	843	616	600	520	666	536	612	664	524	450	487	374	450	436	544	-	546	570	515	-	755	564	**556**
A222SE	0.0762	80	111	106	114	105	159	142	71	106	100	125	118	159	118	173	116	115	89	97	174	129	130	109	139	111	131	137	110	95	102	78	94	91	114	-	113	118	118	-	154	118	**117**
A222SW	0.1301	126	176	169	180	166	253	226	112	168	158	199	187	252	188	274	184	182	141	154	275	204	206	173	220	176	207	218	174	150	161	123	149	144	181	-	179	188	187	-	245	186	**186**
A223NE	0.0668	65	90	87	92	85	130	116	58	86	81	102	96	130	96	141	94	93	72	79	141	105	106	89	113	90	106	112	89	77	83	63	76	74	93	-	92	96	96	-	126	96	**95**
A223SE	0.0645	58	80	77	82	76	116	103	51	77	72	91	86	116	86	126	84	83	64	71	126	93	94	79	101	81	95	100	80	69	74	56	68	66	83	-	82	86	85	-	112	85	**85**
A223SW	0.0711	101	140	135	144	133	202	180	90	134	126	159	150	202	150	219	147	145	112	123	220	163	165	139	176	141	166	174	139	120	129	98	119	115	145	-	143	150	149	-	195	149	**148**
A224NE	0.0624	74	104	100	106	98	149	133	66	99	93	117	111	149	111	162	108	107	83	91	163	120	122	102	130	104	122	128	103	89	95	73	88	85	107	-	106	111	110	-	144	110	**110**
A224NW	0.0992	85	119	114	121	112	170	152	76	113	107	134	127	170	127	185	124	123	95	104	186	138	139	117	149	119	140	147	117	101	109	83	100	97	122	-	121	127	126	-	165	126	**125**
A224R1	0.1117	386	530	507	526	492	751	668	331	493	479	603	560	758	577	803	566	559	432	467	847	620	605	523	670	538	615	666	529	454	490	376	453	439	547	-	548	572	521	-	759	567	**560**
A224R2	0.032	108	148	141	145	137	208	186	92	136	135	169	157	209	162	221	158	158	121	129	237	173	167	146	187	151	172	188	146	125	137	106	126	122	154	-	154	161	142	-	213	158	**156**
A224SW	0.0581	117	163	157	167	154	235	209	104	156	147	184	174	234	174	254	170	168	131	143	255	189	191	161	204	163	192	202	161	139	150	114	138	133	168	-	166	174	173	-	227	173	**172**
A225NE	0.0682	130	181	174	185	171	260	232	116	173	163	204	193	260	193	282	189	187	145	159	283	210	212	178	226	181	213	224	179	154	166	126	153	148	186	-	184	193	192	-	252	192	**191**
A225NW	0.1231	133	186	178	190	175	267	238	119	177	167	210	198	266	198	290	194	192	149	163	291	215	218	183	232	186	219	230	184	158	170	130	157	152	191	-	189	198	197	-	258	197	**196**
A225SE	0.0748	142	198	190	203	187	285	255	127	189	178	224	211	285	212	309	207	205	159	174	311	230	233	196	248	199	234	245	196	169	182	139	168	162	204	-	202	212	211	-	276	210	**209**
A226NE	0.068	127	177	170	181	167	254	227	113	169	159	200	188	254	189	276	184	183	142	155	277	205	207	174	221	177	208	219	175	151	162	124	150	144	182	-	180	189	188	-	246	187	**187**
A226NW	0.1354	136	190	182	195	179	273	244	121	182	171	215	203	273	203	296	198	196	152	167	298	220	223	187	238	190	224	235	188	162	174	133	161	155	196	-	193	203	202	-	264	201	**201**
A227NE	0.0287	54	75	72	76	70	107	96	48	71	67	84	79	107	80	116	78	77	60	65	117	87	88	74	93	75	88	92	74	64	68	52	63	61	77	-	76	80	79	-	104	79	**79**
A227NW	0.0646	120	168	161	172	159	241	215	107	160	151	190	179	241	179	262	175	173	134	147	263	195	197	166	210	168	198	208	166	143	154	117	142	137	173	-	171	179	178	-	234	178	**177**
A227SE	0.0679	127	176	169	181	167	254	226	113	169	159	199	188	253	188	275	184	182	141	155	276	205	207	174	221	177	208	218	175	151	162	123	149	144	182	-	180	188	188	-	246	187	**186**
A227SW	0.0984	103	143	137	147	135	206	184	92	137	129	162	153	206	153	223	149	148	115	126	224	166	168	141	179	143	169	177	142	122	131	100	121	117	148	-	146	153	152	-	199	152	**151**
A228NE	0.1045	105	147	141	150	139	211	188	94	140	132	166	156	211	157	229	153	152	117	129	230	170	172	145	184	147	173	182	145	125	135	103	124	120	151	-	149	156	156	-	204	155	**155**
A228NW	0.1369	133	185	178	189	175	266	237	118	177	166	209	197	266	198	289	193	191	148	162	290	215	217	183	232	185	218	229	183	158	170	129	157	151	191	-	188	197	197	-	257	196	**195**
A228R1	0.0632	217	298	285	295	277	422	375	186	277	270	339	315	425	325	450	319	315	243	262	477	349	339	294	377	303	346	375	297	255	276	212	255	247	308	-	309	322	291	-	427	319	**315**
A228R2	0.1043	356	489	467	481	453	691	615	304	452	444	557	517	695	534	736	523	519	400	429	783	572	555	483	618	498	568	617	485	417	452	348	418	404	506	-	508	530	475	-	702	523	**516**
A228SE	0.0654	129	180	173	185	170	259	231	115	172	162	204	192	259	192	281	188	186	144	158	282	209	211	178	226	180	213	223	178	154	165	126	153	147	186	-	183	192	191	-	251	191	**190**
A229N2	0.0307	25	35	34	36	33	50	45	22	34	32	40	37	50	37	55	37	36	28	31	55	41	41	35	44	35	41	43	35	30	32	25	30	29	36	-	36	37	37	-	49	37	**37**
A229NE	0.0591	97	135	130	138	128	194	173	86	129	122	153	144	194	144	211	141	140	108	119	212	157	159	133	169	135	159	167	134	115	124	95	114	110	139	-	138	144	144	-	188	143	**143**
A229NW	0.0601	49	69	66	70	65	99	88	44	66	62	78	73	99	73	107	72	71	55	60	108	80	81	68	86	69	81	85	68	59	63	48	58	56	71	-	70	73	73	-	96	73	**73**
A229R1	0.1224	415	570	544	560	528	804	716	354	526	518	649	603	807	624	855	610	606	466	499	913	666	646	563	720	582	662	721	563	484	527	406	487	471	590	-	593	618	550	-	820	610	**601**
A229R2	0.0799	273	374	358	369	347	529	471	233	347	340	426	396	533	409	564	401	397	306	329	590	438	425	370	473	382	435	473	371	319	346	266	320	310	387	-	389	406	364	-	538	401	**395**
A229SE	0.1047	105	147	141	150	139	211	189	94	140	132	166	157	211	157	229	153	152	118	129	230	170	172	145	184	147	173	182	145	125	135	103	124	120	151	-	150	157	156	-	205	156	**155**
A229SW	0.1401	136	189	182	194	179	272	243	121	181	170	214	202	272	202	295	198	196	152	166	297	220	222	187	237	190	223	234	187	162	174	132	160	155	195	-	193	202	201	-	264	201	**200**
A230NE	0.1102	107	149	143	152	141	214	191	95	142	134	168	159	214	159	232	155	154	119	131	233	173	175	147	187	149	176	184	147	127	137	104	126	122	154	-	151	159	158	-	207	158	**157**
A230NW	0.0787	112	155	149	159	147	223	200	99	149	140	176	166	223	166	243	162	161	124	136	243	180	182	153	195	156	183	192	154	133	143	109	132	127	160	-	158	166	165	-	216	165	**164**
A230R1	0.0373	129	177	169	175	164	251	223	111	165	160	201	187	253	193	268	189	187	144	156	283	207	202	175	224	180	206	222	177	152	164	125	151	147	183	-	183	191	174	-	253	189	**187**
A230R2	0.0266	90	123	117	120	114	173	154	76	113	112	140	130	173	135	184	132	131	101	108	197	144	139	122	155	126	143	156	121	104	114	88	105	101	128	-	128	134	118	-	177	132	**130**
A230R3	0.0632	217	298	285	295	277	422	375	186	277	270	339	315	425	325	450	319	315	243	262	477	349	339	294	377	303	346	375	297	255	276	212	255	247	308	-	309	322	291	-	427	319	**315**
A230R4	0.0984	336	461	441	454	428	652	580	287	427	419	525	488	656	504	695	493	489	377	405	738	539	524	456	583	470	535	582	457	393	427	328	395	382	477	-	479	500	448	-	662	494	**487**
A230WK	0.0128	43	59	56	58	55	83	74	37	54	54	67	63	83	65	89	63	63	48	52	95	69	67	59	75	61	69	75	58	50	55	42	51	49	62	-	62	64	57	-	85	63	**62**
A231N1	0.0597	100	140	134	143	132	201	179	89	133	126	158	149	200	149	218	146	144	112	123	219	162	164	138	175	140	165	173	138	119	128	98	118	114	144	-	142	149	148	-	194	148	**147**
A231NE	0.0603	49	69	66	71	65	99	88	44	66	62	78	74	99	74	108	72	71	55	60	108	80	81	68	86	69	81	85	68	59	63	48	58	56	71	-	70	74	73	-	96	73	**73**
A231NW	0.0466	38	53	51	55	50	77	68	34	51	48	60	57	77	57	83	56	55	43	47	83	62	63	53	67	53	63	66	53	45	47	37	45	44	55	-	54	57	57	-	74	56	**56**
A231R1	0.0242	82	112	107	109	103	157	140	70	103	102	128	119	158	123	167	120	119	92	98	179	131	126	111	141	114	130	142	110	95	104	80	96	92	116	-	117	122	107	-	161	120	**118**
A231R2	0.0334	114	157	150	154	145	221	197	97	145	142	178	166	223	171	236	167	166	128	137	251	183	178	155	198	160	182	198	155	133	145	111	134	130	162	-	163	170	152	-	225	168	**165**
A231R3	0.0319	110	150	144	149	140	213	190	94	140	136	171	159	215	164	227	161	159	123	132	241	176	171	148	190	153	175	189	150

Table B5 - Subcatchments
Yearly Surface Infiltration Volumes (m³)

Node	Area	1967	1968	1969	1970	1971	1972	1973	1974	1975	1976	1977	1978	1979	1980	1981	1982	1983	1984	1985	1986	1987	1988	1989	1990	1991	1992	1993	1994	1995	1996	1997	1998	1999	2000	2001	2002	2003	2004	2005	2006	2007	Average
A303SW3	0.039	33	47	45	48	44	67	60	30	45	42	53	50	67	50	73	49	48	37	41	73	54	55	46	58	47	55	58	46	40	43	33	39	38	48	-	47	50	49	-	65	49	**49**
A306NE	0.111	112	156	150	159	147	224	200	100	149	140	176	166	224	166	243	163	161	125	137	244	181	183	154	195	156	184	193	154	133	143	109	132	127	161	-	158	166	166	-	217	165	**164**
A306NW	0.156	157	219	210	224	207	315	281	140	209	197	247	233	314	234	342	229	226	175	192	343	254	257	216	274	219	258	271	217	187	201	153	185	179	226	-	223	234	233	-	305	232	**231**
A306R2	0.127	431	591	564	580	548	834	743	368	545	538	674	626	837	648	887	633	629	484	518	948	691	670	584	747	604	686	749	584	503	547	422	506	488	613	-	616	642	571	-	851	633	**624**
A306SE	0.051	88	122	117	125	115	175	156	78	116	110	138	130	175	130	190	127	126	98	107	191	141	143	120	153	122	144	151	121	104	112	85	103	100	126	-	124	130	130	-	170	129	**129**
A306SW	0.051	88	122	117	125	115	175	156	78	116	110	138	130	175	130	190	127	126	98	107	191	141	143	120	153	122	144	151	121	104	112	85	103	100	126	-	124	130	130	-	170	129	**129**
A306SW1	0.064	55	76	73	78	72	110	98	49	73	69	86	82	110	82	119	80	79	61	67	120	89	90	75	96	77	90	95	76	65	70	54	65	62	79	-	78	82	81	-	106	81	**81**
A310NE	0.043	43	60	58	62	57	87	77	39	58	54	68	64	87	64	94	63	62	48	53	95	70	71	60	76	60	71	75	60	52	55	42	51	49	62	-	61	64	64	-	84	64	**64**
A310NE1	0.028	28	39	38	40	37	56	50	25	38	35	44	42	56	42	61	41	41	31	34	62	46	46	39	49	39	46	49	39	34	36	27	33	32	41	-	40	42	42	-	55	42	**41**
A310NW	0.054	54	76	73	78	72	109	97	48	72	68	86	81	109	81	118	79	78	61	66	119	88	89	75	95	76	89	94	75	65	70	53	64	62	78	-	77	81	81	-	105	80	**80**
A310R1	0.044	149	205	196	201	190	289	257	127	189	186	233	217	290	224	307	219	218	168	179	328	240	232	203	259	209	238	259	202	174	190	146	175	169	212	-	213	222	198	-	295	219	**216**
A310SE	0.034	34	48	46	49	45	69	61	30	46	43	54	51	69	51	74	50	49	38	42	75	55	56	47	60	48	56	59	47	41	44	33	40	39	49	-	49	51	51	-	66	51	**50**
A310SW	0.054	54	76	73	78	72	109	97	48	72	68	86	81	109	81	118	79	78	61	66	119	88	89	75	95	76	89	94	75	65	70	53	64	62	78	-	77	81	81	-	105	80	**80**
A311NE	0.12	121	168	162	172	159	242	216	108	161	151	190	179	242	180	263	176	174	135	148	264	195	198	166	211	169	199	209	167	144	154	118	143	138	174	-	171	180	179	-	234	178	**178**
A311NW	0.067	67	94	90	96	89	135	121	60	90	85	106	100	135	100	147	98	97	75	82	147	109	110	93	118	94	111	116	93	80	86	66	80	77	97	-	96	100	100	-	131	100	**99**
A311R1	0.107	363	498	476	489	462	703	626	310	459	453	568	527	706	546	748	533	530	408	437	798	583	564	492	629	509	578	631	492	423	461	355	426	411	516	-	519	541	481	-	717	533	**526**
A311SE	0.119	120	167	160	171	158	240	214	107	160	150	189	178	240	178	261	174	173	134	147	262	194	196	165	209	167	197	207	165	143	153	117	141	136	172	-	170	178	178	-	232	177	**176**
A311SW	0.067	67	94	90	96	89	135	121	60	90	85	106	100	135	100	147	98	97	75	82	147	109	110	93	118	94	111	116	93	80	86	66	80	77	97	-	96	100	100	-	131	100	**99**
APOND2	0.019	31	43	42	44	41	62	56	28	42	39	49	46	62	46	68	45	45	35	38	68	50	51	43	54	44	51	54	43	37	40	30	37	35	45	-	44	46	46	-	60	46	**46**
Total	**27.058**	**54,931**	**75,850**	**72,631**	**76,019**	**70,869**	**108,006**	**96,249**	**47,772**	**71,219**	**68,505**	**86,111**	**80,449**	**108,478**	**82,012**	**116,085**	**80,280**	**79,476**	**61,464**	**66,653**	**120,323**	**88,442**	**87,407**	**74,837**	**95,504**	**76,667**	**88,592**	**94,880**	**75,262**	**64,835**	**69,914**	**53,529**	**64,576**	**62,413**	**78,307**	-	**78,049**	**81,585**	**76,670**	-	**107,490**	**80,822**	**80,081**

Table B6 - Groundwater
Yearly Sub-Surface Infiltration Volumes (m³)

Node	Area	1967	1968	1969	1970	1971	1972	1973	1974	1975	1976	1977	1978	1979	1980	1981	1982	1983	1984	1985	1986	1987	1988	1989	1990	1991	1992	1993	1994	1995	1996	1997	1998	1999	2000	2001	2002	2003	2004	2005	2006	2007	Average
A102NE	0.1339	83	176	174	173	166	158	167	178	179	168	170	166	168	168	155	174	171	187	177	159	166	168	170	159	170	163	159	175	194	176	183	171	179	160	-	179	165	170	-	162	163	**168**
A103NE	0.1353	59	125	124	123	118	112	119	127	127	120	121	118	120	119	110	124	122	133	126	113	118	120	121	113	121	116	113	124	138	125	130	121	127	114	-	127	117	121	-	115	116	**119**
A103SW	0.0582	32	67	67	66	64	61	64	68	69	65	65	64	65	64	59	67	66	72	68	61	64	64	65	61	65	63	61	67	74	67	70	66	69	62	-	69	63	65	-	62	63	**64**
A104NE	0.1378	68	143	142	141	135	129	136	145	146	137	139	135	137	137	126	142	139	153	144	130	135	137	139	130	138	133	129	142	158	143	149	139	146	131	-	146	134	139	-	132	133	**137**
A104NW	0.0471	53	110	110	109	106	102	106	111	111	107	108	106	107	107	100	109	108	115	111	102	106	107	108	102	107	104	102	110	118	110	113	108	112	103	-	111	105	108	-	104	104	**106**
A104SE	0.0528	26	55	54	54	52	49	52	56	56	53	53	52	53	52	48	54	54	59	55	50	52	53	53	50	53	51	50	55	61	55	57	53	56	50	-	56	52	53	-	51	51	**53**
A104SW	0.0473	23	47	47	46	45	43	45	48	48	45	46	45	45	45	42	47	46	51	48	43	45	45	46	43	46	44	43	47	52	47	49	46	48	43	-	48	44	46	-	44	44	**45**
A105NE	0.0577	32	67	66	66	63	60	63	68	68	64	65	63	64	64	59	66	65	71	67	60	63	64	65	63	65	62	60	66	74	67	70	65	68	61	-	68	63	65	-	62	62	**64**
A105NW	0.1045	44	92	92	91	87	83	88	94	94	89	90	87	89	88	81	91	90	99	93	83	87	88	90	84	89	86	83	92	102	92	96	90	94	84	-	94	86	89	-	85	86	**88**
A105SE	0.0582	32	67	67	66	64	61	64	68	68	65	65	64	64	64	59	67	66	72	68	61	64	64	65	61	65	63	61	67	74	67	70	66	69	61	-	69	63	65	-	62	63	**64**
A105SW	0.1044	34	72	72	71	68	65	69	73	73	69	70	68	69	69	63	71	70	77	73	65	68	69	70	65	70	67	65	72	80	72	75	70	73	66	-	74	67	70	-	67	67	**69**
A106N1	0.0845	31	65	64	64	61	58	62	66	66	62	63	61	62	62	57	64	63	69	65	59	61	62	63	59	63	60	59	65	72	65	68	63	66	59	-	66	61	63	-	60	60	**62**
A106N2	0.0773	25	54	53	52	50	48	51	54	54	51	52	50	51	51	47	53	52	57	54	48	50	51	52	48	52	50	48	53	59	53	56	52	54	49	-	54	50	52	-	49	50	**51**
A106NE	0.0626	29	60	60	59	57	54	57	61	61	58	58	57	58	57	53	60	59	64	61	54	57	58	58	54	58	56	54	60	67	60	63	58	61	55	-	61	56	58	-	56	56	**58**
A106NW	0.0644	26	54	54	53	51	49	52	55	55	52	53	51	52	52	48	54	53	58	55	49	51	52	53	49	53	50	49	54	60	54	57	53	55	50	-	55	51	53	-	50	51	**52**
A106R1	0.0465	45	96	95	94	91	87	91	97	97	92	93	91	92	92	85	95	93	101	96	87	91	92	93	87	93	89	87	95	104	95	99	93	97	88	-	97	90	93	-	89	89	**92**
A106R2	0.1506	197	410	409	409	398	386	398	413	414	402	404	400	402	401	382	408	406	426	413	388	398	400	403	387	403	392	389	409	435	410	420	405	416	390	-	413	395	403	-	391	393	**398**
A106SE	0.073	23	48	47	47	45	43	45	48	49	46	46	45	46	45	42	47	46	51	48	43	45	46	46	43	46	44	43	47	53	48	50	46	49	43	-	49	45	46	-	44	44	**46**
A106SW	0.0666	26	54	53	53	51	48	51	55	55	52	52	51	52	51	47	53	52	57	54	49	51	52	52	49	52	50	48	53	60	54	56	52	55	49	-	55	50	52	-	50	50	**51**
A108N1	0.052	60	125	124	123	120	116	120	126	126	121	122	120	121	121	114	124	122	130	125	116	120	121	122	116	122	118	116	124	134	124	128	122	126	117	-	126	119	122	-	118	118	**120**
A108NE	0.0393	19	39	39	39	37	35	37	40	40	38	38	37	38	38	35	39	38	42	40	36	37	38	38	36	38	37	36	39	44	39	41	38	40	36	-	40	37	38	-	36	37	**38**
A108NW	0.0287	27	57	57	56	54	52	55	58	58	55	56	54	55	55	51	57	56	61	58	52	54	55	56	52	56	53	52	57	63	57	60	56	58	53	-	58	54	56	-	53	54	**55**
A108R1	0.2228	267	557	555	553	537	519	538	562	563	543	546	539	543	541	512	553	548	581	561	521	537	541	546	521	545	528	522	555	595	556	572	548	565	524	-	562	533	545	-	527	530	**538**
A108R2	0.1143	143	299	298	297	289	280	289	301	302	292	294	290	292	291	276	297	295	311	301	281	289	291	293	281	293	284	282	298	318	298	306	294	303	282	-	301	287	293	-	284	285	**289**
A108SE	0.1135	62	131	130	129	124	118	124	133	133	126	127	124	126	125	115	130	128	140	132	118	124	125	127	119	127	122	118	130	145	131	137	127	133	119	-	133	123	127	-	121	122	**125**
A108SW	0.0507	35	75	74	73	70	67	71	75	76	71	72	70	71	71	66	74	73	79	75	68	70	71	72	67	72	69	67	74	82	75	78	73	76	68	-	76	70	72	-	69	69	**71**
A109NE	0.0292	33	68	68	68	66	63	66	69	69	66	67	66	66	66	62	68	67	72	69	64	66	66	67	63	67	65	64	68	73	68	70	67	69	64	-	69	65	67	-	64	65	**66**
A109NW	0.0533	27	58	57	56	54	52	55	58	58	55	56	54	55	55	51	57	56	61	58	52	54	55	56	52	56	53	52	57	64	58	60	56	59	52	-	59	54	56	-	53	53	**55**
A109SE	0.0936	51	108	107	106	102	97	103	110	110	104	105	102	104	103	95	107	105	115	109	98	102	104	105	98	105	100	98	107	120	108	113	105	110	99	-	110	101	105	-	100	101	**103**
A110NE	0.1026	49	103	102	101	97	92	98	104	104	98	100	97	98	98	90	102	100	110	103	93	97	98	100	93	99	95	93	102	114	103	107	100	105	94	-	105	96	99	-	95	95	**98**
A110NW	0.0866	40	83	83	82	79	75	79	85	85	80	81	79	80	79	73	82	81	89	84	75	79	80	81	75	81	77	75	83	92	83	87	81	85	76	-	85	78	81	-	77	77	**80**
A110R1	0.0385	40	83	83	82	79	76	80	84	84	81	81	80	81	80	75	83	82	88	84	77	80	80	81	77	81	78	77	83	90	83	86	82	85	77	-	84	79	81	-	78	78	**80**
A110R10	0.0379	37	78	77	77	74	71	74	79	79	75	76	74	75	75	69	77	76	82	78	71	74	75	76	71	75	73	71	77	85	78	81	76	79	72	-	79	73	76	-	72	73	**75**
A110R2	0.0357	37	77	77	76	74	71	74	78	78	75	75	74	75	74	69	77	76	82	78	71	74	74	75	71	75	73	71	77	84	77	80	76	79	72	-	78	73	75	-	72	73	**74**
A110R3	0.0389	40	84	84	83	80	77	81	85	85	81	82	81	81	81	76	83	82	89	85	78	80	81	82	77	82	79	77	84	91	84	87	82	86	78	-	85	80	82	-	79	79	**81**
A110R4	0.0471	49	102	101	101	97	93	98	103	103	99	99	98	99	98	92	101	100	108	103	94	97	98	99	94	99	96	94	101	111	102	105	100	104	95	-	103	97	99	-	95	96	**98**
A110R5	0.0452	44	93	92	91	88	84	88	94	94	89	90	88	89	89	83	92	90	98	94	85	88	89	90	85	90	87	85	92	101	93	96	91	94	85	-	94	88	90	-	86	87	**89**
A110R6	0.0418	41	86	85	84	81	78	82	87	87	83	83	82	83	82	76	85	84	91	87	78	82	82	83	78	83	80	78	85	94	86	89	84	87	79	-	87	81	83	-	80	80	**82**
A110R7	0.0456	45	94	93	92	89	85	89	95	95	90	91	89	90	90	83	93	91	99	94	86	89	90	91	85	91	87	85	93	102	94	97	91	95	86	-	95	88	91	-	87	88	**90**
A110R8	0.0591	58	121	120	119	115	110	116	123	123	117	118	115	117	116	108	120	118	129	122	111	115	116	118	111	118	113	111	121	133	121	126	118	123	112	-	123	114	118	-	113	113	**116**
A110R9	0.0323	35	74	73	73	70	68	71	74	74	71	72	71	71	71	67	73	72	77	74	68	70	71	72	68	72	69	68	73	79	73	76	72	75	69	-	74	70	72	-	69	69	**71**
A110SE	0.0587	25	52	51	51	49	47	49	53	53	50	50	49	50	50	46	51	51	55	52	47	49	50	50	47	50	48	47	52	58	52	54	51	53	47	-	53	49	50	-	48	48	**50**
A110SW	0.0824	44	92	91	90	87	83	87	93	94	88	89	87	88	88	81	91	90	98	93	83	87	88	89	83	89	85	83	91	102	92	96	90	94	84	-	94	86	89	-	85	86	**88**
A111NW	0.0905	45	94	93	92	89	84	89	95	96	90	91	89	90	90	83	93	92	100	95	85	89	90	91	85	91	87	85	93	104	94	98	91	96	86	-	96	88	91	-	87	87	**90**
A111SE	0.0869	40	84	83	82	79	75	79	85	85	80	81	79	80	80	73	83	81	89	84	76	79	80	81	76	81	78	75	83	93	84	87	81	85	76	-	85	78	81	-	77	78	**80**
A112NE	0.1184	61	128	126	125	121	115	121	130	130	122	124	121	122	122	112	126	124	136	129	115	120	122	124	115	123	119	115	127	141	128	133	124	130	116	-	130	120	124	-	118	119	**122**
A112NW	0.0531	24	51	51	50	48	46	49	52	52	49	50	48	49	49	45	51	50	55	51	46	48	49	50	46	49	47	46	51	57	51	53	50	52	47	-	52	48	49	-	47	47	**49**
A112R3	0.0559	52	109	107	107	103	98	103	110	110	104	105	103	104	104	96	107	106	116	109	98	103	104	105	98	105	101	98	108	119	108	113	106	110	99	-	110	102	105	-	100	101	**104**
A112R4	0.0976	101	211	210	209	202	193	202	214	214	204	206	202	204	203	190	209	207	223	213	194	202	203	206	194	205	198	194	210	229	211	219	207	215	196	-	214	200	206	-	197	199	**203**
A112SE	0.1192	55	115	114	113	108	103	109	116	117	110	111	108	110	109	101	113	112	122	116	104	108	110	111	104	111	106	103	114	127	115	120	111	117	104	-	117	107	111	-	106	107	**110**
A112SW	0.0441	17	36	35	35	34	32	34	36	36	34	35	34	34	34	31	35	35	38	36	32	34	34	35	32	34	33	32	35	39	36	37	35	36	32	-	36	33	34	-	33	33	**34**
A112WK	0.0389	56	115	115	115	112	110	112	116	116	113	114	113	113	113	109	115	114	119	116	110	112	113	114	110	113	111	110	115	121	115	117	114	117	110	-	116	112	113	-	111	111	**112**
A113R1	0.1345	161	336	335	334	324	313	325	339	340	328	330	326	328	327	309	334	331	351	339	315	325	327	330	314	329	319	316	335	359	336	346	331	341	317	-	339	322	329	-	318	320	**325**
A113R2	0.0836	86	181	180	179	173	166	173	183	183	175	176	173	175	174	163	179	177	191	182	167	173	174	176	166	176	170	166	180	197	181	187	177	184	168	-	183	172	176	-	169	170	**174**
A114NE	0.0293	12	25	25	24	23	22	24	25	25	24	24	23	24	24	22	25	24	26	25	22	23	24	24	22	24	23	22	25	27	25	26	24	25	23	-	25	23	24	-	23	23	**24**
A114R1	0.0675	62	131	130	129	124	118	124	133	133	126	127	124	126	125	115	130	127	140	132	119	124	125	127	122	118	130	144	131	136	128	133	120	-	133	123	127	-	121	122	**125**
A114R2	0.0534	58	122	121	120	116	112	117	123	123	118	119	117	118	117	110	121	119	128	123	113	117	117	119	112	118	115	113	121	131	121	125	119	124	113	-	123	116	119	-	114	115	**117**
A114R3	0.0736	76	159	158	157	152	146	152	161	161	154	155	152	154	153	143	158	156	168	161	147	152	153	155	146	155	150	147	158	173	159	165	156	162	148	-	161	151	155	-	149	150	**153**
A114R4	0.1447	141	297	295	292	282	270	283	301	301	286	289	283	286	285	265	294	290	315	300	272	282	285	289	271	288	278	271	295	325	297	308	290	302	273	-	301	280	289	-	276	278	**285**
A114SE	0.1052	68	142	141	140	134	128	135	144	145	136	138	135	136	136	125	141	138	152	143	129	134	136	138	129	137	132	128	141	157	142	148	138	145	130	-	145	133	138	-	131	132	**136**
A114SW	0.1843	94	199	197	195	188	178	189	202	202	190	193	188	190	189	174	196	193	212	200	180	187	190	193	180	192	184	179	197	220	199	207	193	202	181	-	202	186	192	-	183	185	**190**
A115NE	0.08	42	89	88	88	84	80	85	91	91	86	87	84	86	85	79	88	87	95	90	81	84	85	87	81	86	83	81	89	99	89	93	87	91	81	-	91	84	86	-	83	83	**85**
A115NW	0.0502	23	48	48	47	46	43	46	49	49	46	47	46	46	46	42	48	47	52	49	44	46	46	47	44	47	45	44	48	53	48	50	47	49	44	-	49	45	47	-	45	45	**46**
A115R1	0.0441	48	100	100	99	96	92	96	101	102	97	98	97	97	97	91	100	98	106	101	93	96	97	98	93	98	95	93	100	108	100	104	99	102	94	-	102	96	98	-	94	95	**97**
A115R2	0.0429	44	93	92	92	89	85	89	94	94	90	91	89	90	89	84	92	91	98	94	85	89	89	89	91	85	90	87	85	92	101	93	96	91	94	86	-	94	88	90	-	87	87	**89**
A115R3	0.0346	36	75	74	74	71	69	72	76	76	72	73	72	72	72	67	74	73	79	76	69	72	72	73	69	73	70	69	74	81	75	77	73	76	69	-	76	71	73	-	70	70	**72**
A115R4	0.0355	35	73	72	72	69	66	69	74	74	70	71	69	70	70	65	72	71	77	73	67	69	70	71	67	71	68	66	72	80	73	76	71	74	67	-	74	69	71	-	68	68	**70**
A115RS	0.05	49	103	102	101	97	93	98	104	104	99	100	98	99	98	91	102	100	109	103	94	98	98	100	94	99	96	94	102	112	103	106	100	104	94	-	104	97	100	-	95	96	**98**
A115R6	0.0405	40	83	82	82	79	75	79	84	84	80	81	79	80	80	74	82	81	88	84	76	79	80	81	76	81	78	76	83	91	83	86	81	85	77	-	84	78	81	-	77	78	**80**
A115SE	0.0218	23	49	48	48	46	45	47	49	49	47	47	47	47	47	44	48	48	51	49	45	46	47	47	45	47	46	45	48	52	48	50	48	49	45	-	49	46	47	-	45	46	**47**
A115SW	0.0392	43	89	89	88	86	83	86	90	91	87	87	86	87	86	81	89	88	94	90	83	86	86	87	83	87	84	83	89	96	89	92	88	91	83	-	90	85	87	-	84	85	**86**
A115W1	0.0351	24	50	50	49	47	45	48	51	51	48	49	47	48	48	44	50	49	54	51	45	47	48	49	45	49	47	45	50	55	50	52	49	51	46	-	51	47	49	-	46	47	**48**
A116E1	0.037	27	56	55	55	53	50	53	57	57	54	54	53	53	53	49	55	54	60	56	51	53	53	54	50	54	52	50	55	62	56	58	54	57	51	-	57	52	54	-	52	52	**53**
A116NE	0.081	43	91	90	89	86	81	86	92	92	87	88	86	87	86	80	90	88	97	91	82	85	87	88	82	88	84	82	90	100	91	94	88	92	83	-	92	85	88	-	84	84	**87**
A116NW	0.0753	37	78	78	77	74	70	74	79	80	75	76	74	75	75	69	77	76	84	79	71	74	75	76	71	76	73	71	78	87	78	82	76	80	71	-	80	73	76	-	72	73	**75**
A116R1	0.1084	142	295	295	294	286	278	287	297	298	289	291	288	289	288	275	294	292	306	298	279	286	288	290	279	290	282	280	294	313	295	302	291	299	280	-	297	284	290	-	281	282	**286**
A116R2	0.1022	151	313	313	313	306	298	306	315	316	308	309	308	308	307	296	312	311	322	315	299	306	307	309	298	308	301	300	312	328	312	319	310	317	300	-	314	304	308	-	300	302	**305**
A116R3	0.0796	87	181	180	179	174	167	174	183	184	176	177	174	176	175	164	180	178	191	183	168	174	175	177	168	177	171	168	180	196	181	187	178	184	169	-	183	172	177	-	170	171	**175**
A116R4	0.059	51	134	132	130	128	120	129	135	101	130	131	129	130	129	122	133	131	96	130	123	128	129	131	124	130	124	122	133	127	131	136	120	120	119	-	132	119	127	-	124	127	**124**
A116R5	0.069	62	165	162	160	158	148	158	166	123	160	161	159	160	158	150	163	161	117	160	152	157	159	161	153	159	153	150	163	151	160	162	147	147	147	-	162	146	156	-	153	156	**153**
A116R6	0.066	52	135	133	131	128	119	129	137	103	131	131	129	130	129	120	133	131	97	131	123	128	129	131	123	130	124	121	134	138	132	139	122	121	119	-	134	118	128	-	124	127	**125**
A116R7	0.062	49	127	125	123	121	112	121	128	97	123	123	121	122	121	113	125	123	91	123	115	120	121	123	116	122	117	113	126	130	124	131	114	114	112	-	126	111	120	-	116	119	**117**
A116SE	0.0791	52	110	109	108	104	99	104	111	112	106	107	104	105	105	97	109	107	117	111	100	104	105	107	99	106	102	99	109	121	110	115	107	112	100	-	112	103	107	-	102	102	**105**
A116SW	0.0762	26	56	55	55	53	50	53	56	57	53	54	52	53	53	49	55	54	59	56	50	52	53	54	50	54	52	50	55	62	56	58	54	57	51	-	57	52	54	-	51	52	**53**
A117NE	0.0839	43	91	90	89	85	81	86	92	92	87	88	85	87	86	79	89	88	97	91	82	85	87	88	82	87	84	82	90	100	90	94	88	92	82	-	92	85	88	-	84	84	**86**
A117NW	0.0821	41	85	85	84	81	77	81	87	87	82	83	81	82	81	75	84	83	91	86	77	80	82	83	77	83	79	77	85	94	85	89	83	87	78	-	87	80	83	-	79	79	**82**
A117R1	0.085	80	213	210	205	205	192	205	214	158	207	208	206	207	205	195	210	208	151	206	197	204	205	208	198	206	197	195	211	188	207	204	190	189	191	-	209	190	202	-	198	202	**197**
A117R2	0.062	51	134	132	130	128	119	128	135	102	130	130	128	129	128	120	132	130	96	130	122	127	129	130	123	129	121	133	132	140

Table B6 - Groundwater
Yearly Sub-Surface Infiltration Volumes (m³)

Node	Area	1967	1968	1969	1970	1971	1972	1973	1974	1975	1976	1977	1978	1979	1980	1981	1982	1983	1984	1985	1986	1987	1988	1989	1990	1991	1992	1993	1994	1995	1996	1997	1998	1999	2000	2001	2002	2003	2004	2005	2006	2007	Average
A122NE	0.1276	70	147	146	145	139	132	140	150	150	141	143	139	141	140	129	146	143	157	148	133	139	141	143	133	142	137	133	146	163	147	154	143	150	134	-	150	138	143	-	136	137	**141**
A122R1	0.0732	108	224	224	224	219	214	219	225	226	221	222	220	221	220	212	223	222	231	226	214	219	220	221	214	221	215	215	224	235	224	228	222	227	215	-	229	217	221	-	215	216	**218**
A122R2	0.2135	315	653	653	653	638	622	638	658	659	643	646	643	643	642	617	651	649	673	658	624	638	641	645	623	644	628	627	652	685	652	665	648	662	627	-	656	634	644	-	628	630	**636**
A124NE	0.0469	30	63	63	62	60	57	60	64	64	61	61	60	61	60	56	63	62	68	64	57	60	61	61	57	61	59	57	63	70	63	66	62	65	58	-	64	59	61	-	58	59	**61**
A124NW	0.131	46	140	139	112	126	123	134	122	94	135	130	133	135	134	124	127	130	86	130	126	132	132	136	122	135	128	124	140	90	135	107	119	118	122	-	140	122	133	-	128	131	**124**
A124R1	0.0918	100	209	208	207	200	192	201	211	212	203	204	201	203	202	190	207	205	220	211	194	200	202	204	193	204	197	194	208	226	209	216	205	212	195	-	211	199	204	-	196	197	**201**
A124R2	0.136	123	325	320	316	312	292	313	327	243	316	317	313	315	312	296	321	317	231	315	300	310	313	317	302	314	301	296	322	297	316	320	291	290	291	-	320	289	309	-	302	307	**301**
A124SE	0.0469	20	42	41	41	39	37	39	42	42	40	40	39	40	40	36	41	40	44	42	38	39	40	40	38	40	38	37	41	46	41	43	40	42	38	-	42	39	40	-	38	39	**40**
A124SW	0.136	38	114	113	91	103	100	109	100	77	110	106	109	110	109	101	104	106	70	106	103	108	108	111	100	110	104	101	114	73	110	87	97	97	100	-	114	100	108	-	105	107	**101**
A125E1	0.0575	58	121	121	120	116	111	116	123	123	117	118	116	117	117	109	120	119	128	122	111	116	117	118	111	118	114	111	121	132	121	126	119	123	112	-	123	115	118	-	113	114	**117**
A125NE	0.0478	24	50	49	49	47	45	47	50	51	48	48	47	48	47	44	49	48	53	50	45	47	48	48	45	48	46	45	49	55	50	52	48	51	45	-	51	47	48	-	46	46	**48**
A125NW	0.0931	41	86	85	84	81	77	82	87	87	82	83	81	82	82	75	85	84	92	87	78	81	82	83	78	83	80	77	85	95	86	90	84	88	78	-	88	81	83	-	79	80	**82**
A125R1	0.1047	114	238	237	236	228	220	229	241	241	231	233	229	231	230	216	237	234	251	240	221	228	230	233	221	232	225	221	237	257	238	246	234	242	222	-	241	227	233	-	224	225	**230**
A125R2	0.1093	119	249	247	246	238	229	239	251	252	241	243	239	241	240	226	247	244	262	251	230	238	240	243	230	242	234	231	248	269	249	257	244	253	232	-	252	237	243	-	234	235	**240**
A125SE	0.0476	18	38	38	38	36	35	37	39	39	37	37	36	37	37	34	38	37	41	39	35	36	37	37	35	37	36	35	38	43	38	40	37	39	35	-	39	36	37	-	36	36	**37**
A125SW	0.0931	34	72	71	70	68	64	68	73	73	69	69	67	69	68	63	71	70	76	72	65	67	69	69	65	69	66	64	71	79	72	75	69	73	65	-	73	67	69	-	66	66	**68**
A126E1	0.0331	12	25	25	25	24	23	24	26	26	24	25	24	24	24	22	25	25	27	26	23	24	24	25	23	25	24	23	25	28	25	27	25	26	23	-	26	24	25	-	24	24	**24**
A126NE	0.0333	34	72	72	71	69	66	69	73	73	70	70	69	70	70	65	72	71	76	73	67	69	70	70	66	70	68	66	72	78	72	75	71	73	67	-	73	68	70	-	68	68	**69**
A126NW	0.0258	27	57	57	57	55	53	55	58	58	56	56	55	56	55	52	57	56	60	58	53	55	55	56	53	56	54	53	57	62	57	59	56	58	53	-	58	55	56	-	54	54	**55**
A126R1	0.0977	112	233	232	231	224	216	225	236	236	227	229	225	227	226	213	232	229	244	235	217	224	226	228	217	228	221	218	232	251	233	240	229	237	219	-	236	223	228	-	220	221	**225**
A126SE	0.032	24	50	49	49	47	45	47	50	50	48	48	47	47	47	44	49	48	53	50	45	47	47	48	45	48	46	45	49	55	50	52	48	50	45	-	50	46	48	-	46	46	**47**
A126SW	0.0259	20	42	42	41	40	38	40	43	43	40	41	40	40	40	37	42	41	45	42	38	40	40	41	38	41	39	38	42	46	42	44	41	43	38	-	43	40	41	-	39	39	**40**
A126W1	0.0767	32	68	67	67	64	61	64	69	69	65	66	64	65	65	60	67	66	72	68	61	64	65	66	61	66	63	61	67	75	68	71	66	69	62	-	69	64	66	-	63	63	**65**
A129NE	0.1715	88	185	183	182	175	166	176	188	188	177	179	175	177	176	162	183	180	197	186	167	174	177	179	167	179	172	167	184	205	185	193	180	188	168	-	188	173	179	-	171	172	**177**
A129NW	0.0657	32	68	68	67	65	61	65	69	69	65	66	64	65	65	60	68	66	73	69	62	64	65	66	62	66	63	62	68	76	68	71	66	70	62	-	70	64	66	-	63	63	**65**
A129R1	0.123	134	280	278	277	268	258	269	283	284	272	274	269	271	271	254	278	275	294	282	259	268	270	273	259	273	264	259	279	302	280	289	275	285	261	-	283	266	273	-	263	264	**270**
A129R2	0.1272	145	304	302	301	292	282	293	307	307	296	298	293	295	294	278	302	299	318	306	283	292	294	297	283	297	287	283	302	326	303	313	299	308	285	-	307	290	297	-	286	288	**293**
A129SE	0.097	75	158	156	155	149	142	150	160	160	151	153	149	151	151	139	156	154	168	159	143	149	151	153	143	152	147	143	157	174	158	164	154	161	144	-	160	148	153	-	146	147	**151**
A129SW	0.0642	32	67	66	66	63	60	63	68	68	64	65	63	64	64	59	66	65	71	67	60	63	64	65	60	65	62	60	66	74	67	70	65	68	61	-	68	63	65	-	62	62	**64**
A130NE	0.15	47	143	142	114	129	125	137	125	96	138	133	136	138	136	126	130	132	88	133	129	135	135	139	125	138	131	127	143	92	137	109	121	125	-	143	125	135	-	131	134	**126**
A130NW	0.047	17	50	50	40	45	44	48	44	34	49	47	48	48	48	45	46	46	31	47	45	47	48	49	44	49	46	45	50	32	48	38	43	42	44	-	50	44	48	-	46	47	**44**
A130R1	0.175	158	418	412	406	401	376	402	421	313	407	408	403	405	402	381	413	408	298	406	386	399	403	407	388	404	387	381	414	383	406	412	374	373	374	-	411	372	397	-	388	396	**387**
A130SE	0.147	54	162	161	130	147	143	156	142	110	157	152	155	157	155	144	148	150	99	151	147	154	154	158	142	157	149	144	162	104	156	124	138	138	142	-	163	142	154	-	149	152	**144**
A130SW	0.055	17	52	52	42	47	46	50	46	35	51	49	50	51	50	46	48	49	32	49	47	50	50	51	46	51	48	47	52	34	50	40	44	44	46	-	52	46	50	-	48	49	**46**
A132N1	0.029	21	63	63	50	57	58	62	53	43	61	58	62	62	62	58	57	57	39	58	59	61	60	60	55	61	59	58	64	40	60	47	55	52	57	-	64	57	61	-	60	58	**57**
A132NE	0.028	16	49	49	39	45	44	47	43	33	48	46	47	48	47	44	45	46	30	46	45	47	47	48	43	48	45	44	49	32	47	38	42	43	47	-	49	43	47	-	45	46	**44**
A132NW	0.033	9	26	26	21	24	23	25	23	18	26	25	25	25	25	23	24	24	16	25	24	25	25	26	23	26	24	23	26	17	25	20	22	22	23	-	26	23	25	-	24	25	**23**
A132R1	0.088	79	210	207	204	202	189	202	211	157	204	205	203	204	202	192	208	205	150	204	194	201	203	205	195	203	195	192	208	192	204	207	188	187	188	-	207	187	200	-	195	199	**195**
A132R2	0.1119	128	267	266	265	257	248	257	270	270	260	262	258	260	259	244	265	263	280	269	249	257	259	262	249	261	253	249	266	287	267	275	263	271	251	-	270	255	261	-	252	253	**258**
A132R3	0.1145	125	261	259	258	250	240	250	263	264	253	255	251	253	252	236	259	256	274	263	241	250	252	255	241	254	246	242	259	281	260	269	256	265	243	-	264	248	254	-	245	246	**251**
A132R4	0.101	110	230	229	227	220	212	221	232	233	223	225	221	223	222	209	228	226	242	232	213	220	222	225	213	224	217	213	229	248	230	237	226	234	214	-	233	219	224	-	216	217	**221**
A132SE	0.033	18	54	54	43	49	48	52	47	37	53	51	52	53	52	48	49	50	33	50	49	52	51	53	47	53	50	48	54	35	52	41	46	46	48	-	54	48	52	-	50	51	**48**
A132SW	0.048	18	55	54	44	50	48	53	48	37	53	51	52	53	52	49	50	51	34	51	50	52	52	53	48	53	50	49	55	35	53	42	47	46	48	-	55	48	52	-	50	51	**49**
A133NE	0.0433	56	116	116	115	112	109	113	117	117	114	114	113	113	113	108	115	115	120	117	110	113	113	114	109	114	111	110	116	123	116	119	114	118	110	-	117	112	114	-	110	111	**112**
A133NW	0.0948	122	254	253	253	246	239	246	256	257	249	250	247	248	248	236	253	251	264	256	240	246	248	250	239	249	242	241	253	269	254	260	251	257	241	-	256	245	249	-	242	243	**246**
A133SE	0.06	68	184	179	148	173	185	194	148	134	176	169	195	195	180	189	166	165	117	166	189	193	184	174	167	177	178	188	196	114	170	139	160	153	184	-	194	176	188	-	188	192	**170**
A133SW	0.132	149	405	395	325	380	408	427	325	294	387	371	428	429	397	415	365	363	258	366	416	425	404	384	366	390	391	414	432	251	374	305	353	336	404	-	426	388	413	-	414	422	**374**
A133W1	0.0432	56	116	115	115	112	109	112	117	117	113	114	113	113	113	108	115	114	120	116	109	112	113	114	109	113	110	110	115	123	116	118	114	117	110	-	116	111	114	-	110	111	**112**
A133W2	0.06	68	184	179	148	173	185	194	148	134	176	169	195	195	180	189	166	165	117	166	189	193	184	174	167	177	178	188	196	114	170	139	160	153	184	-	194	176	188	-	188	192	**170**
A133W3	0.0616	71	148	147	146	142	137	142	149	149	144	145	142	143	143	135	146	145	154	149	138	142	143	144	137	144	140	138	147	158	147	152	145	150	138	-	149	141	144	-	139	140	**142**
A133W4	0.088	92	253	248	203	237	251	264	205	183	243	232	265	266	249	256	228	228	161	229	256	263	251	241	228	244	244	255	268	157	235	191	222	210	249	-	265	243	259	-	256	261	**233**
A134NE	0.047	57	153	148	123	144	156	163	122	111	146	140	163	164	150	159	138	137	98	138	159	162	154	145	139	147	149	159	164	94	141	115	132	127	154	-	162	146	156	-	158	161	**142**
A134NW	0.126	136	375	366	301	351	375	393	302	271	358	343	394	395	367	382	338	336	238	339	382	391	373	355	338	361	361	380	398	232	347	282	327	311	371	-	393	359	382	-	381	388	**345**
A134SE	0.025	19	57	57	45	52	53	56	47	39	55	52	56	57	56	53	51	51	35	52	54	56	55	54	50	55	53	53	58	36	54	43	50	47	52	-	58	52	55	-	54	55	**51**
A134SW	0.115	120	331	325	266	309	329	345	268	239	317	303	346	347	325	334	299	297	210	300	335	343	328	314	298	319	318	333	351	205	307	250	290	275	326	-	346	318	339	-	334	341	**305**
A135R1	0.023	20	52	52	51	50	47	50	53	40	51	51	50	51	50	47	52	51	37	51	48	50	50	51	48	51	48	47	52	50	51	53	47	47	47	-	52	46	50	-	48	49	**48**
A136NE	0.031	18	53	53	43	48	47	51	46	36	52	50	51	52	51	48	49	49	33	50	49	51	51	52	47	52	49	48	53	34	51	41	45	45	47	-	54	47	51	-	49	50	**47**
A136NE1	0.024	14	42	42	34	38	37	41	37	29	41	39	40	41	41	38	38	39	26	39	38	40	40	41	37	41	39	38	42	27	41	32	36	36	37	-	42	37	40	-	39	40	**37**
A136NW	0.039	11	34	34	27	31	30	33	30	23	33	32	33	33	33	30	31	32	21	32	31	32	32	33	30	33	31	30	34	22	33	26	29	29	30	-	34	30	32	-	31	32	**30**
A136NW1	0.025	15	44	44	35	40	39	42	38	30	43	41	42	43	42	39	40	41	27	41	40	42	42	43	38	43	40	39	44	28	42	34	38	37	39	-	44	39	42	-	41	41	**39**
A136NW2	0.033	10	29	29	23	26	25	28	25	20	28	27	28	28	28	26	26	27	18	27	26	27	27	28	25	28	27	26	29	19	28	22	25	24	25	-	29	25	27	-	27	27	**26**
A136R1	0.034	27	70	69	68	66	61	66	70	53	67	68	66	67	66	62	69	68	50	68	63	66	67	68	64	67	64	62	69	71	68	72	63	62	61	-	69	61	66	-	64	65	**64**
A136SE	0.028	21	61	61	48	55	56	60	51	42	59	56	60	60	60	56	55	55	37	56	57	59	58	58	53	59	56	56	62	38	58	46	53	51	55	-	61	55	59	-	58	59	**54**
A201NE	0.1387	76	160	159	157	151	144	152	163	163	154	155	151	153	153	141	158	156	171	162	145	151	153	155	145	155	149	145	159	177	160	167	156	163	146	-	163	150	155	-	148	149	**153**
A201S1	0.098	28	86	85	69	78	75	82	75	58	83	80	82	83	82	76	78	80	53	80	78	81	81	84	75	83	79	76	86	55	83	66	73	73	75	-	86	75	81	-	79	80	**76**
A201SW	0.133	40	121	121	97	110	107	117	106	82	118	113	116	117	116	108	111	113	74	113	110	115	115	118	106	118	111	108	121	78	117	93	103	103	106	-	122	106	115	-	112	114	**107**
A203NE	0.103	39	117	117	94	106	103	113	103	79	114	110	112	114	112	104	107	109	72	109	106	111	111	115	103	114	108	104	118	76	113	90	100	100	103	-	118	103	111	-	108	110	**104**
A203NW	0.098	41	123	122	98	112	109	118	108	83	120	115	118	119	118	110	112	114	76	115	112	117	117	120	108	119	113	110	123	79	119	94	105	104	108	-	124	108	117	-	113	116	**109**
A203R1	0.136	137	380	378	333	370	356	373	363	272	376	377	375	375	373	362	378	376	254	371	363	371	373	374	358	373	360	361	379	278	370	314	336	338	353	-	373	348	367	-	363	369	**351**
A203R2	0.088	92	249	247	231	242	229	242	250	182	245	245	244	244	243	233	247	245	176	243	235	241	243	245	236	243	234	233	248	203	243	223	223	222	228	-	245	225	239	-	235	239	**231**
A203R3	0.111	100	265	262	258	254	239	255	267	198	258	259	256	257	255	242	262	259	189	257	245	253	256	258	246	256	246	242	263	243	258	261	237	236	237	-	261	236	252	-	246	251	**245**
A204E1	0.1535	76	160	158	157	151	143	152	162	162	153	155	151	153	152	140	158	155	170	161	144	151	153	155	144	154	148	144	159	177	160	167	155	163	145	-	162	150	154	-	147	148	**153**
A204E2	0.1536	59	124	123	122	117	111	118	126	126	119	120	117	119	118	109	123	121	132	125	112	117	119	120	112	120	115	112	123	137	124	130	120	126	113	-	126	116	120	-	115	115	**119**
A204NE	0.096	25	77	76	61	69	67	74	67	52	74	72	73	74	73	68	70	71	47	71	69	72	73	75	67	74	70	68	77	49	74	59	65	65	67	-	77	67	73	-	70	72	**68**
A204NW	0.107	30	89	89	72	81	79	86	78	61	87	84	85	86	86	79	82	83	55	83	81	85	85	87	78	87	82	80	90	58	86	66	68	76	78	-	90	78	85	-	82	84	**79**
A204R1	0.136	123	325	320	316	312	292	313	327	243	316	317	313	315	312	296	321	317	231	315	300	310	313	317	302	314	301	296	322	297	316	320	291	290	291	-	320	289	309	-	302	307	**301**
A204R2	0.0665	72	151	151	150	145	139	145	153	153	147	148	145	147	146	137	150	148	159	153	140	145	146	148	140	147	143	140	151	163	151	156	149	154	141	-	153	144	148	-	142	143	**146**
A204R3	0.1353	147	308	306	305	295	284	296	311	312	299	301	296	299	298	279	306	302	324	311	285	295	298	301	285	300	290	285	307	332	308	318	302	313	287	-	312	293	301	-	289	291	**297**
A204R4	0.0808	83	175	174	173	167	160	167	177	177	169	171	167	169	168	157	173	171	185	176	161	167	168	170	161	170	164	161	174	190	175	181	171	178	162	-	177	166	170	-	163	164	**168**
A204R5	0.0731	84	175	174	173	168	162	168	176	177	170	171	169	170	169	160	173	172	183	176	163	168	169	171	162	171	165	163	174	188	174	180	172	177	164	-	176	167	171	-	165	166	**169**
A204SE	0.096	31	95	94	76	86	83	91	83	64	92	89	91	92	91	84	87	88	58	88	86	90	90	93	83	92	87	84	95	61	91	73	81	80	83	-	95	83	90	-	87	89	**84**
A205SE	0.109	38	116	115	93	105	102	112	102	79	113	108	111	112	111	103	106	108	71	108	105	110	110	113	102	112	107	103	116	75	112	89	99	98	102	-	116	102	110	-	107	109	**103**
A205SW	0.037	31	89	89	71	82	84	90	74	63	86	82	90	90	88	85	80	81	55	81	86	89	86	85	79	86	84	85	92	56	84	67	79	74	84	-	91	83	88	-	87	88	**81**
A206NE	0.138	50	152	151	122	138	134	146	133	103	148	142	145	147	146	135	139	141	93	142	138	144	144	149	133	147	140	136	152	98	147	116	129	129	134	-	153	134	145	-	140	143	**135**
A206R1	0.078	70	187	184	181	179	168	180	188	140	182	182	180	181	179	170	184	182	133	181	172	178	180	182	173	180	173	170	185	170	181	184	167	166	167	-	184	166	177	-	173	177	**173**
A208NW	0.183	65	195	194	156	177	171	187	170	132	189	182	186	188	186	173	178	181	120	181	176	185	185	190	171	189	179	173	195	125	188	149	166	165	171	-	195	171	185	-	179	183	**173**
A208R1	0.092	83	220	217	214	211	198	211	221	164	214	215	212	213	211	201	217	215	157	213	203	210	212	214	204	213	204	201	218	201	214	217	197	196	197	-	216	195	209	-	204	208	**204**
A208R2	0.11408	130	272	271	270	262	253	262	275	276	265	267	263	265	264	249	271	268	285	275	254	262	264	267	253	266	258	254	271	293	272	280	268	277	255	-	275	260	266	-

Table B6 - Groundwater
Yearly Sub-Surface Infiltration Volumes (m³)

Node	Area	1967	1968	1969	1970	1971	1972	1973	1974	1975	1976	1977	1978	1979	1980	1981	1982	1983	1984	1985	1986	1987	1988	1989	1990	1991	1992	1993	1994	1995	1996	1997	1998	1999	2000	2001	2002	2003	2004	2005	2006	2007	Average
A216E1	0.0308	33	69	68	68	66	63	66	69	69	66	67	66	66	66	62	68	67	72	69	63	66	66	67	63	67	64	63	68	74	68	71	67	70	64	-	69	65	67	-	64	65	**66**
A216NE	0.0918	45	96	95	94	90	86	91	97	97	92	93	90	91	91	84	94	93	102	96	86	90	91	93	86	92	89	86	95	106	95	100	93	97	87	-	97	89	92	-	88	89	**91**
A216NW	0.0893	42	89	89	88	84	80	85	91	91	86	87	84	86	85	78	88	87	95	90	81	84	86	87	81	86	83	81	89	99	89	93	87	91	81	-	91	84	86	-	83	83	**85**
A216R1	0.048	58	120	120	119	116	112	116	121	121	117	118	116	117	117	110	119	118	125	121	112	116	117	118	112	117	114	113	120	128	120	123	118	122	113	-	121	115	118	-	114	114	**116**
A216R2	0.0407	49	102	101	101	98	95	98	103	103	99	100	99	99	99	94	101	100	106	103	95	98	99	100	95	100	97	95	101	109	102	105	100	103	96	-	103	98	100	-	96	97	**98**
A216R3	0.0597	58	122	121	121	116	111	117	124	124	118	119	117	118	117	109	121	119	130	124	112	116	118	119	112	119	114	112	122	134	122	127	120	125	113	-	124	116	119	-	114	115	**117**
A216R4	0.0548	54	112	111	111	107	102	107	114	114	108	109	107	108	108	100	111	110	119	113	103	107	108	109	103	109	105	103	112	123	112	117	110	114	103	-	114	106	109	-	104	105	**108**
A216SE	0.0888	36	75	74	74	71	67	71	76	76	72	73	71	72	72	66	74	73	80	76	68	71	72	73	68	73	70	68	75	83	75	78	73	77	68	-	77	70	73	-	69	70	**72**
A216SW	0.0924	35	75	74	73	70	67	71	76	76	72	72	70	71	71	65	74	73	80	75	67	70	71	72	67	72	69	67	74	83	75	78	72	76	68	-	76	70	72	-	69	69	**71**
A217NE	0.1516	75	158	156	155	149	141	150	160	160	151	153	149	151	150	138	156	153	168	159	142	149	151	153	143	152	146	142	157	174	158	164	153	161	144	-	160	148	152	-	146	146	**151**
A217NW	0.0784	39	82	81	80	77	73	77	83	83	78	79	77	78	78	72	81	79	87	82	74	77	78	79	74	79	76	73	81	90	82	85	79	83	74	-	83	76	79	-	75	76	**78**
A217R1	0.0605	73	151	151	150	146	141	146	153	153	148	148	147	147	147	139	150	149	158	152	142	146	147	148	141	148	144	142	151	162	151	155	149	154	142	-	153	145	148	-	143	144	**146**
A217R2	0.068	78	162	162	161	156	150	156	164	164	158	159	157	158	157	148	161	160	170	164	151	156	157	159	151	159	154	151	162	174	162	167	160	165	152	-	164	155	159	-	153	154	**157**
A217R3	0.0677	77	162	161	160	155	150	156	163	164	157	158	156	157	157	148	161	159	169	163	151	156	157	158	150	158	153	151	161	174	161	166	159	164	152	-	163	154	158	-	152	153	**156**
A217R4	0.0502	60	125	125	125	121	117	121	127	127	122	123	122	122	122	115	125	124	131	126	117	121	122	123	117	123	119	118	125	134	125	129	124	127	118	-	127	120	123	-	119	119	**121**
A217R5	0.0836	82	172	170	169	163	156	163	174	174	165	167	163	165	164	153	170	167	182	173	157	163	165	167	157	166	160	156	170	188	171	178	167	174	158	-	174	162	167	-	159	160	**164**
A217R6	0.0875	85	180	178	177	170	163	171	182	182	173	175	171	173	172	160	178	175	190	181	164	171	172	175	164	174	168	164	178	196	179	186	175	183	165	-	182	169	174	-	167	168	**172**
A217R7	0.086	84	176	175	174	168	160	168	179	179	170	172	168	170	169	157	175	172	187	178	161	168	169	172	161	171	165	161	175	193	176	183	172	179	162	-	179	166	171	-	164	165	**169**
A217R8	0.0631	62	129	128	127	123	117	123	131	131	125	126	123	125	124	115	128	126	137	131	118	123	124	126	118	125	121	118	129	142	129	134	126	132	119	-	131	122	126	-	120	121	**124**
A217SE	0.1515	58	122	121	120	116	110	116	124	124	117	119	115	117	117	107	121	119	131	123	111	115	117	119	111	118	113	110	122	135	122	128	119	125	111	-	125	115	118	-	113	114	**117**
A217SW	0.0784	26	54	54	53	51	49	52	55	55	52	53	51	52	52	48	54	53	58	55	49	51	52	53	49	52	50	49	54	60	54	57	53	55	49	-	55	51	52	-	50	54	**52**
A218NE	0.0513	29	61	61	60	58	55	58	62	62	59	59	58	59	59	54	61	60	65	62	56	58	59	59	55	59	57	55	61	68	61	64	60	63	56	-	62	58	59	-	57	57	**59**
A218SE	0.0517	23	48	47	47	45	43	45	48	49	46	46	45	46	46	42	47	47	51	48	43	45	46	46	43	46	44	43	47	53	48	50	46	49	44	-	49	45	46	-	44	44	**46**
A218W3	0.036	25	53	52	52	50	48	50	54	54	51	51	50	51	50	47	52	51	56	53	48	50	51	51	48	51	49	48	53	58	53	55	51	54	48	-	54	50	51	-	49	49	**51**
A220NE	0.0464	14	30	30	30	29	27	29	31	31	29	29	29	29	29	27	30	30	32	31	27	29	29	29	27	29	28	27	30	34	30	32	29	31	28	-	31	28	29	-	28	28	**29**
A220NW	0.0577	42	89	89	88	84	80	85	91	91	86	87	85	86	85	79	88	87	95	90	81	84	85	87	81	86	83	81	89	99	89	93	87	91	82	-	91	84	87	-	83	83	**85**
A220SW	0.1254	55	116	115	114	109	104	110	117	118	111	112	109	111	110	102	114	113	123	117	105	109	111	112	105	112	107	104	115	128	116	121	112	118	105	-	118	108	112	-	107	107	**111**
A221NE	0.0326	14	30	30	30	28	27	29	31	31	29	29	28	29	29	26	30	29	32	30	27	28	29	29	27	29	28	27	30	33	30	31	29	31	27	-	31	28	29	-	28	28	**29**
A221SE	0.0561	61	128	127	127	123	118	123	129	130	124	125	123	124	124	116	127	126	134	129	119	123	124	125	118	125	121	119	127	138	128	132	126	130	119	-	129	122	125	-	120	121	**123**
A222E1	0.0245	27	56	56	55	54	52	54	56	57	54	55	54	54	54	51	55	55	59	56	52	54	54	55	52	54	53	52	56	60	56	58	55	57	52	-	57	53	55	-	53	53	**54**
A222E2	0.0438	20	42	42	41	40	38	40	43	43	40	41	40	40	40	37	42	41	45	42	38	40	40	41	38	41	39	38	42	47	42	44	41	43	38	-	43	39	41	-	39	39	**40**
A222E3	0.0327	36	75	74	74	71	69	72	75	76	72	73	72	72	72	68	74	73	78	75	69	72	72	73	69	73	70	69	74	80	75	77	73	76	70	-	75	71	73	-	70	71	**72**
A222E4	0.1176	56	118	117	116	111	106	112	119	120	113	114	111	113	112	103	116	115	126	119	106	111	113	114	106	114	109	106	117	130	118	123	114	120	107	-	120	110	114	-	109	109	**112**
A222NE	0.0643	31	64	64	63	61	58	61	65	65	62	62	61	62	61	57	64	63	69	65	58	61	62	62	58	62	60	58	64	71	64	67	63	66	59	-	66	60	62	-	59	60	**62**
A222NW	0.1299	59	125	124	123	118	112	119	127	127	120	121	118	120	119	110	124	122	133	126	113	118	120	121	113	121	116	113	124	138	125	130	121	127	114	-	127	117	121	-	115	116	**119**
A222R1	0.0305	33	69	69	69	67	64	67	70	70	70	67	68	67	67	63	69	68	73	70	64	67	67	68	64	68	65	64	69	75	69	72	68	71	65	-	70	66	68	-	65	66	**67**
A222R2	0.0477	49	103	103	102	98	94	99	104	105	100	101	99	100	99	93	102	101	109	104	95	99	99	101	95	100	97	95	103	112	103	107	101	105	96	-	105	98	101	-	96	97	**99**
A222R3	0.0352	36	76	76	75	73	70	73	77	77	74	74	73	74	73	69	76	75	80	77	70	73	73	74	70	74	72	70	76	83	76	79	75	77	71	-	77	72	74	-	71	72	**73**
A222R4	0.1161	126	264	263	262	253	244	254	267	268	256	258	254	256	255	240	262	259	278	266	245	253	255	258	245	258	249	245	263	285	264	273	259	269	246	-	267	252	258	-	248	250	**255**
A222RS	0.095	98	206	204	203	196	188	197	208	208	199	201	197	199	198	185	204	201	217	207	189	196	198	200	189	205	223	205	213	201	209	191	-	208	195	200	-	192	193	**198**
A222R6	0.1075	111	233	231	230	222	213	223	235	236	225	227	223	225	224	209	231	228	246	235	214	222	224	227	214	226	218	214	231	253	233	241	228	237	216	-	236	221	227	-	217	219	**224**
A222R7	0.0913	94	198	196	195	189	181	189	200	200	191	193	189	191	190	178	196	193	209	199	182	188	190	193	182	192	186	182	197	215	197	205	193	201	183	-	200	187	192	-	185	186	**190**
A222R8	0.1058	109	229	227	226	218	210	219	232	232	222	223	219	221	220	206	227	224	242	231	211	219	221	223	211	223	215	211	228	249	229	237	224	233	212	-	232	217	223	-	214	215	**220**
A222R9	0.1117	122	254	253	252	244	234	244	257	257	247	249	244	246	246	231	252	249	267	256	236	244	246	248	235	248	240	236	253	275	254	262	249	258	237	-	257	242	248	-	239	240	**245**
A222SE	0.0762	39	82	81	81	78	74	78	83	84	79	80	78	79	78	72	81	80	88	83	74	78	79	80	74	79	76	74	82	91	82	86	80	84	75	-	84	77	80	-	76	76	**79**
A222SW	0.1301	62	130	129	128	123	117	124	132	132	125	126	123	125	124	114	129	127	139	131	118	123	125	126	118	126	121	117	129	144	130	136	127	133	119	-	133	122	126	-	120	121	**124**
A223NE	0.0668	32	67	66	66	63	60	64	68	68	64	65	63	64	64	59	66	65	71	67	60	63	64	65	60	65	62	60	66	74	67	70	65	68	61	-	68	63	65	-	62	62	**64**
A223SE	0.0645	28	60	59	58	56	54	57	61	61	57	58	56	57	57	52	59	58	64	60	54	56	57	58	54	58	55	54	59	66	60	62	58	61	54	-	61	56	58	-	55	55	**57**
A223SW	0.0711	50	104	103	103	99	94	99	106	106	100	101	99	100	100	92	103	102	111	105	95	99	100	101	95	101	97	94	104	115	105	109	102	106	95	-	106	98	101	-	97	97	**100**
A224NE	0.0624	37	77	76	76	73	69	73	78	78	74	75	73	74	74	68	76	75	82	78	70	73	74	74	70	74	72	70	77	85	77	80	75	79	70	-	78	72	75	-	71	72	**74**
A224NW	0.0992	42	88	87	86	83	79	83	89	89	84	85	83	84	84	77	87	85	94	88	79	83	84	85	79	85	81	79	87	97	88	92	85	89	80	-	89	82	85	-	81	81	**84**
A224R1	0.1117	128	267	266	264	256	247	257	269	270	260	261	258	259	259	244	265	262	279	269	249	257	258	261	248	261	252	249	266	286	267	275	262	271	250	-	270	255	261	-	252	253	**257**
A224R2	0.032	30	62	62	61	59	56	59	63	63	60	60	59	60	59	55	61	60	66	63	56	59	59	60	56	60	58	56	62	68	62	65	61	63	57	-	63	58	60	-	57	58	**59**
A224SW	0.0581	60	126	125	124	120	115	121	127	128	122	123	121	122	121	113	125	123	133	127	116	120	121	123	116	122	118	116	125	137	126	130	123	128	117	-	128	119	123	-	118	119	**121**
A225NE	0.0682	65	136	135	134	129	123	130	138	138	131	132	129	131	130	121	135	133	145	137	124	129	131	132	124	132	127	124	135	149	136	142	133	139	125	-	138	128	132	-	126	127	**130**
A225NW	0.1231	65	138	136	135	130	124	131	140	140	132	133	130	132	131	121	136	134	147	139	124	130	132	133	124	133	128	124	137	152	138	143	134	140	125	-	140	129	133	-	127	128	**131**
A225SE	0.0748	71	150	148	147	142	135	142	151	152	144	145	142	144	143	133	148	146	159	151	136	142	143	145	136	145	139	136	149	164	149	155	146	152	137	-	152	141	145	-	139	140	**143**
A226NE	0.068	63	132	131	130	125	119	125	134	134	127	128	125	127	126	116	131	128	141	133	120	125	126	128	120	128	123	119	131	145	132	137	129	134	121	-	134	124	128	-	122	123	**126**
A226NW	0.1354	67	141	139	138	133	126	134	143	143	135	136	133	135	134	124	139	137	150	142	127	133	135	136	127	136	131	127	140	156	141	147	137	143	128	-	143	132	136	-	130	131	**134**
A227NE	0.0287	26	56	55	55	53	50	53	56	57	54	54	53	53	53	49	55	54	59	56	51	53	53	54	50	54	52	50	55	61	56	58	54	57	51	-	57	52	54	-	52	52	**53**
A227NW	0.0646	60	126	124	123	119	113	119	127	127	120	122	119	120	120	111	124	122	134	127	114	119	120	122	114	121	117	113	125	138	125	131	122	128	115	-	127	118	122	-	116	117	**120**
A227SE	0.0679	63	132	131	129	125	119	125	134	134	127	128	125	126	126	116	130	128	140	133	120	125	126	128	119	127	123	119	131	145	132	137	128	134	121	-	134	124	128	-	122	123	**126**
A227SW	0.0984	50	106	105	104	100	95	101	108	108	102	103	100	102	101	93	105	103	113	107	96	100	102	103	96	103	99	96	105	117	106	111	103	108	97	-	108	99	103	-	98	99	**101**
A228NE	0.1045	52	109	108	107	103	98	103	110	110	104	105	103	104	104	95	107	106	116	109	98	102	104	105	98	105	101	98	108	120	109	113	106	111	99	-	111	102	105	-	100	101	**104**
A228NW	0.1369	65	137	136	135	129	123	130	139	139	131	133	129	131	131	120	135	133	146	138	124	129	131	133	124	132	127	124	136	152	137	143	133	140	125	-	140	128	133	-	127	127	**131**
A228R1	0.0632	69	144	143	142	138	133	138	145	146	140	141	138	139	139	130	143	141	151	145	133	138	139	141	133	140	136	133	143	155	144	148	141	146	134	-	146	137	140	-	135	136	**139**
A228R2	0.1043	108	226	224	223	215	207	216	228	229	218	220	216	218	217	203	224	221	238	228	208	216	217	220	208	219	212	208	225	245	226	234	221	230	209	-	229	214	220	-	211	212	**217**
A228SE	0.0654	66	138	137	136	131	126	132	140	140	133	135	133	133	133	124	137	135	146	139	127	132	133	134	127	134	129	127	137	150	138	143	135	140	128	-	140	131	134	-	129	130	**133**
A229N2	0.0307	12	26	26	26	25	23	25	26	26	25	25	25	25	25	23	26	25	28	26	24	25	25	25	24	25	24	24	25	29	26	27	25	26	24	-	26	24	25	-	24	24	**25**
A229NE	0.0591	48	101	100	99	95	91	96	102	102	97	98	95	97	96	89	100	98	107	102	91	95	96	98	91	97	94	91	100	111	101	105	98	103	92	-	102	95	98	-	93	94	**96**
A229NW	0.0601	24	51	50	50	48	46	48	52	52	49	49	48	49	48	45	50	50	54	51	46	48	49	49	46	49	47	46	51	56	51	53	49	52	46	-	52	48	49	-	47	47	**49**
A229R1	0.1224	120	251	249	247	239	228	240	254	255	242	244	239	242	241	224	249	245	266	253	230	239	241	244	229	244	235	229	250	275	251	261	245	256	231	-	255	237	244	-	234	235	**241**
A229R2	0.0799	83	173	172	171	165	158	166	175	175	167	169	165	167	167	156	171	169	183	174	159	165	167	169	159	168	162	159	172	188	173	179	169	176	160	-	175	164	168	-	162	163	**166**
A229SE	0.1047	52	109	108	107	103	98	103	110	111	104	105	103	104	104	96	108	106	116	110	98	103	104	106	98	105	101	98	108	120	109	114	106	111	99	-	111	102	105	-	101	101	**104**
A229SW	0.1401	67	140	139	138	132	126	133	142	143	134	136	132	134	134	123	139	137	150	141	127	132	134	136	127	136	130	126	139	155	140	146	136	143	128	-	143	131	136	-	130	130	**134**
A230NE	0.1102	52	110	109	108	104	99	105	112	112	106	107	104	106	105	97	109	107	118	111	100	104	106	107	100	107	102	99	110	122	110	115	107	112	101	-	112	103	107	-	102	103	**105**
A230NW	0.0787	55	116	114	114	109	104	110	117	117	111	112	109	111	110	102	114	113	123	117	105	109	111	112	105	112	107	104	115	128	116	121	113	118	106	-	118	108	112	-	107	108	**111**
A230R1	0.0373	43	89	89	88	86	83	86	90	90	87	87	86	87	86	81	88	88	93	90	83	86	86	87	83	87	84	83	89	96	89	92	88	90	84	-	90	85	87	-	84	84	**86**
A230R2	0.0266	25	52	51	51	49	46	49	52	52	50	50	49	50	49	46	51	50	55	52	47	49	49	50	47	50	48	47	51	57	52	54	50	53	47	-	52	48	50	-	48	48	**49**
A230R3	0.0632	69	144	143	142	138	133	138	145	146	140	141	138	139	139	130	143	141	151	145	133	138	139	141	133	140	136	133	143	155	144	148	141	146	134	-	146	137	140	-	135	136	**139**
A230R4	0.0984	102	213	212	210	203	195	204	215	216	206	208	204	206	205	192	211	208	225	215	196	203	205	208	196	207	200	196	212	231	213	220	209	217	197	-	216	202	207	-	199	200	**205**
A230WK	0.0128	12	25	25	24	23	22	24	25	25	24	24	24	24	24	22	25	24	26	25	23	24	24	24	23	24	23	22	25	27	25	26	24	25	23	-	25	23	24	-	23	23	**24**
A231N1	0.0597	49	104	103	102	98	94	99	105	106	100	101	99	100	99	92	103	101	111	105	94	99	100	101	94	101	97	94	103	115	104	108	101	106	95	-	106	98	101	-	96	97	**100**
A231NE	0.0603	24	51	51	50	48	46	48	52	52	49	49	48	49	49	45	50	50	54	51	46	48	49	50	46	49	47	46	51	56	51	53	50	52	46	-	52	48	49	-	47	47	**49**
A231NW	0.0466	19	39	39	39	37	35	37	40	40	38	38	37	38	38	35	39	38	42	40	36	37	38	38	36	38	37	36	39	44	39	41	38	40	36	-	40	37	38	-	36	37	**38**
A231R1	0.0242	22	47	47	46	44	42	45	48	48	45	46	44	45	45	41	46	46	50	47	43	44	45	46	43	45	44	42	47	52	47	49	46	48	43	-	48	44	46	-	43	44	**45**
A231R2	0.0334	34	72	72	71	69	66	69	73	73	70	70	69	70	70	65	72	71	76	73	67	69	70	70	66	70	68	66	72	79	72	75	71	73	67	-	73	69	70	-	68	68	**69**
A231R3	0.0319	35	73	72	72	70	67	70	73	74	70	71	70	70	70	66	72	71	76	73	67	69	70	71	67	71	68	67	72	78	73

Table B6 - Groundwater
Yearly Sub-Surface Infiltration Volumes (m³)

Node	Area	1967	1968	1969	1970	1971	1972	1973	1974	1975	1976	1977	1978	1979	1980	1981	1982	1983	1984	1985	1986	1987	1988	1989	1990	1991	1992	1993	1994	1995	1996	1997	1998	1999	2000	2001	2002	2003	2004	2005	2006	2007	Average
A303SW3	0.039	11	34	34	27	31	30	33	30	23	33	32	33	33	33	30	31	32	21	32	31	32	32	33	30	33	31	30	34	22	33	26	29	29	30	-	34	30	32	-	31	32	**30**
A306NE	0.111	38	114	113	91	103	100	109	100	77	111	107	109	110	109	101	104	106	70	106	103	108	108	111	100	110	105	102	114	73	110	87	97	97	100	-	114	100	108	-	105	107	**101**
A306NW	0.156	53	160	159	128	145	141	154	140	108	155	150	153	155	153	142	146	149	98	149	145	152	152	156	140	155	147	142	160	103	154	122	136	136	140	-	161	140	152	-	147	150	**142**
A306R2	0.127	124	261	259	257	248	237	249	264	264	251	254	248	251	250	232	258	254	276	263	238	248	250	254	238	253	244	238	259	285	261	271	255	265	240	-	265	246	253	-	242	244	**250**
A306SE	0.051	30	90	89	72	81	79	86	78	61	87	84	86	87	86	80	82	83	55	83	82	85	85	88	78	87	83	80	90	57	86	68	77	76	79	-	90	79	86	-	83	85	**80**
A306SW	0.051	30	90	89	72	81	79	86	78	61	87	84	86	87	86	80	82	83	55	83	82	85	85	88	78	87	83	80	90	57	86	68	77	76	79	-	90	79	86	-	83	85	**80**
A306SW1	0.064	19	56	56	45	51	49	54	49	38	54	52	53	54	54	50	51	52	34	52	51	53	53	55	49	54	51	50	56	36	54	43	48	47	49	-	56	49	53	-	52	53	**50**
A310NE	0.043	15	44	44	35	40	39	42	39	30	43	41	42	43	42	39	40	41	27	41	40	42	42	43	39	43	41	39	44	28	43	34	38	37	39	-	44	39	42	-	41	41	**39**
A310NE1	0.028	10	29	29	23	26	25	28	25	19	28	27	28	28	28	26	26	27	18	27	26	27	27	28	25	28	26	26	29	19	28	22	24	24	25	-	29	25	27	-	26	27	**25**
A310NW	0.054	18	55	55	44	50	49	53	49	37	54	52	53	54	53	49	51	51	34	52	50	52	53	54	49	54	51	49	56	36	53	42	47	47	49	-	56	49	53	-	51	52	**49**
A310R1	0.044	35	90	89	87	86	79	86	91	69	87	88	86	87	86	80	89	88	64	88	82	85	86	87	82	87	83	81	89	92	88	93	81	81	79	-	89	79	85	-	83	84	**83**
A310SE	0.034	12	35	35	28	32	31	34	31	24	34	33	33	34	33	31	32	32	21	33	32	33	33	34	31	34	32	31	35	22	34	27	30	30	31	-	35	31	33	-	32	33	**31**
A310SW	0.054	18	55	55	44	50	49	53	49	37	54	52	53	54	53	49	51	51	34	52	50	52	53	54	49	54	51	49	56	36	53	42	47	47	49	-	56	49	53	-	51	52	**49**
A311NE	0.12	41	123	122	99	112	108	118	108	83	120	115	118	119	118	109	112	114	76	115	112	117	117	120	108	119	113	110	123	79	119	94	105	105	108	-	124	108	117	-	113	116	**109**
A311NW	0.067	23	69	68	55	62	60	66	60	47	67	64	66	66	66	61	63	64	42	64	62	65	65	67	60	67	63	61	69	44	66	53	58	58	60	-	69	60	65	-	63	65	**61**
A311R1	0.107	84	220	216	213	208	193	209	222	167	212	213	209	211	209	195	216	213	157	213	199	207	210	213	200	211	201	196	217	224	214	226	198	197	193	-	217	192	207	-	201	205	**203**
A311SE	0.119	40	122	121	98	111	107	117	107	83	119	114	117	118	117	108	111	113	75	114	111	116	116	119	107	118	112	109	122	79	118	93	104	104	107	-	123	107	116	-	112	115	**108**
A311SW	0.067	23	69	68	55	62	60	66	60	47	67	64	66	66	66	61	63	64	42	64	62	65	65	67	60	67	63	61	69	44	66	53	58	58	60	-	69	60	65	-	63	65	**61**
APOND2	0.019	11	32	32	26	29	28	31	28	22	31	30	31	31	31	29	29	30	20	30	29	30	30	31	28	31	29	29	32	20	31	24	27	27	28	-	32	28	30	-	29	30	**28**
Total	**27.058**	**19,706**	**44,731**	**44,365**	**42,555**	**42,392**	**40,812**	**43,057**	**43,983**	**41,270**	**43,294**	**43,287**	**43,015**	**43,421**	**43,070**	**40,482**	**43,696**	**43,314**	**41,804**	**44,226**	**41,307**	**42,837**	**43,092**	**43,555**	**40,871**	**43,429**	**41,852**	**41,133**	**44,654**	**44,207**	**44,189**	**43,884**	**42,343**	**43,421**	**41,112**	**-**	**45,170**	**41,663**	**43,375**	**-**	**41,866**	**42,284**	**42,275**

BORRISOKANE ROAD

DRAINAGE TO SOUTH WOODLOT, FUT. DEVELOPMENT ASSUMED CONTROL POST TO PRE

SWM POND

SWM POND BLOCK AS PER CAIVAN - THE RIDGE CITY FILE No. D07-16-19-0005

FUTURE SCHOOL

FUTURE DELPHINUS AVE

TAMARACK - THE MEADOWS IN HALF MOON BAY CITY FILE No. D07-16-18-0011

EXTERNAL DRAINAGE AREA AND STORM SEWER DESIGN WITHIN FUTURE GREENBANK ROAD PER TAMARACK-THE MEADOWS IN HALF MOON BAY PREPARED BY DSEL PROJECT NO. 1089 DATED 2019-09-10

REFER TO STORM IN FUT. GREENBANK ROAD ON DETAIL 1

PARK

(FUTURE COMMERCIAL)

CAIVAN - ABIC GRADING PLAN PREPARED BY DSEL, DECEMBER 2019.

URBAN BOUNDARY

HAIKU STREET

HAIKU STREET

EXPANSION ROAD

ELEVATION ROAD

OBSIDIAN STREET

FUTURE GREENBANK ROAD

CAIVAN - THE RIDGE CITY FILE No. D07-16-19-0005

JACKDAW AVE

SCHOOL

PARK

FUTURE GREENBANK ROAD

DETAIL 1
SCALE 1:1000

LEGEND

- SUBJECT LANDS
- PROPOSED STORM TRUNK
- LOCAL STORM SEWER
- EXISTING STORM SEWER
- STORM SEWER BY OTHERS
- STORM DRAINAGE AREA
- EXISTING STORM DRAINAGE AREA
- POND FOOTPRINT BY OTHERS
- POND ACCESS ROAD BY OTHERS
- OVERLAND FLOW ROUTE

6.07Ha / 0.55 / 150 153 — STORM DRAINAGE AREA, RUN-OFF COEFFICIENT, UPSTREAM MH/DOWNSTREAM MH

5-YEAR — STORM FREQUENCY

101.87 T/G 94.522 OBV — TOP OF GRATE, PROPOSED STORM OBVERT

STORM MANHOLE

EES SYSTEM

DSEL
david schaeffer engineering ltd
120 Iber Road, Unit 103
Stittsville, Ontario, K2S 1E9
Tel. (613) 836-0856
Fax. (613) 836-7183
www.DSEL.ca

CAIVAN GREENBANK NORTH INC.

CITY OF OTTAWA

STORM SERVICING PLAN

SCALE:	0.666600	PROJECT No.:	19-1123
DATE:	MAY 2020	DRAWING:	2

STORM SEWER CALCULATION SHEET (RATIONAL METHOD)

Local Roads Return Frequency = 2 years
Collector Roads Return Frequency = 5 years
Manning 0.013 Arterial Roads Return Frequency = 10 years

	LOCATION		AREA (Ha)																FLOW						SEWER DATA							
			2 YEAR				5 YEAR				10 YEAR				100 YEAR				Time of	Intensity	Intensity	Intensity	Intensity	Peak Flow	DIA. (mm)	DIA. (mm)	TYPE	SLOPE	LENGTH	CAPACITY	VELOCITY	TIME OF	RATIO
			AREA	R	Indiv.	Accum.	AREA	R	Indiv.	Accum.	AREA	R	Indiv.	Accum.	AREA	R	Indiv.	Accum.	Conc.	2 Year	5 Year	10 Year	100 Year										
Location	From Node	To Node	(Ha)		2.78 AC	2.78 AC	(Ha)		2.78 AC	2.78 AC	(Ha)		2.78 AC	2.78 AC	(Ha)		2.78 AC	2.78 AC	(min)	(mm/h)	(mm/h)	(mm/h)	(mm/h)	Q (l/s)	(actual)	(nominal)		(%)	(m)	(l/s)	(m/s)	LOW (min	Q/Q full
Unknown Road19 - 17																																
					0.00	0.00	0.00	0.00	0.00	0.00			0.00	0.00			0.00	0.00	12.48														
			0.15	0.65	0.27	0.27			0.00	0.00			0.00	0.00			0.00	0.00														
			0.57	0.65	1.03	1.30			0.00	0.00			0.00	0.00			0.00	0.00														
	236	237	0.62	0.65	1.12	2.42			0.00	0.00			0.00	0.00			0.00	0.00	12.48	68.44	92.71	108.62	158.69	166	600	600	CONC	0.15	108.5	237.8	0.84	2.15	0.70
	237	238	0.55	0.65	0.99	3.42			0.00	0.00			0.00	0.00			0.00	0.00	14.63	62.66	84.78	99.29	145.01	214	750	750	CONC	0.20	108.5	497.9	1.13	1.60	0.43
To Unknown Road18 - 16, Pipe 238 - 239						3.42				0.00				0.00				0.00	16.23														
Unknown Road20 - 18																																
					0.00	0.00	0.00	0.00	0.00	0.00			0.00	0.00			0.00	0.00	16.06														
					0.00	0.00	0.00	0.00	0.00	0.00			0.00	0.00			0.00	0.00	17.46														
					0.00	0.00	0.22	0.65	0.40	0.40			0.00	0.00			0.00	0.00														
			1.27	0.65	2.29	2.29			0.00	0.40			0.00	0.00			0.00	0.00														
	214	215			0.00	2.29	1.96	0.65	3.54	3.94			0.00	0.00			0.00	0.00	17.46	56.52	76.38	89.41	130.51	431	675	675	CONC	0.45	56.5	563.9	1.58	0.60	0.76
To Unknown Road4 - 04, Pipe 215 - 216						2.29				3.94				0.00				0.00	18.05														
Unknown Road4 - 04																																
Contribution From Unknown Road20 - 18, Pipe 214 - 215						2.29				3.94				0.00				0.00	18.05														
					0.00	2.29	0.16	0.65	0.29	4.23			0.00	0.00			0.00	0.00														
	215	216			0.00	2.29	0.28	0.65	0.51	4.73			0.00	0.00			0.00	0.00	18.05	55.39	74.83	87.59	127.85	481	750	750	CONC	0.30	49.0	609.8	1.38	0.59	0.79
	216	217			0.00	2.29	0.29	0.65	0.52	5.26			0.00	0.00			0.00	0.00	18.65	54.32	73.37	85.88	125.32	510	825	825	CONC	0.20	67.0	641.9	1.20	0.93	0.80
	217	230			0.00	2.29	0.28	0.65	0.51	5.76			0.00	0.00			0.00	0.00	19.58	52.72	71.20	83.32	121.58	531	900	900	CONC	0.15	67.0	701.1	1.10	1.01	0.76
Contribution From Unknown Road22 - 20, Pipe 228 - 230						5.98				0.00				0.00				0.00	17.64														
					0.00	8.28	0.30	0.65	0.54	6.31			0.00	0.00			0.00	0.00														
	230	238	0.34	0.65	0.61	8.89			0.00	6.31			0.00	0.00			0.00	0.00	20.59	51.10	68.98	80.72	117.77	889	1200	1200	CONC	0.15	64.5	1510.0	1.34	0.81	0.59
To Unknown Road18 - 16, Pipe 238 - 239						8.89				6.31				0.00				0.00	21.39														
Unknown Road18 - 16																																
			0.00	0.00	0.00	0.00			0.00	0.00			0.00	0.00			0.00	0.00	20.25														
			0.10	0.65	0.18	0.18			0.00	0.00			0.00	0.00			0.00	0.00														
					0.00	0.18	1.36	0.71	2.68	2.68			0.00	0.00			0.00	0.00														
	104	105	24.70	0.64	44.22	44.40			0.00	2.68			0.00	0.00			0.00	0.00	20.25	51.63	69.71	81.57	119.01	2479	2250	2250	CONC	0.10	26.0	6590.6	1.66	0.26	0.38
					0.00	44.40	0.00	0.00	0.00	2.68			0.00	0.00			0.00	0.00	14.33														
			0.21	0.65	0.38	44.78			0.00	2.68			0.00	0.00			0.00	0.00														
	105	111	1.28	0.65	2.31	47.09			0.00	2.68			0.00	0.00			0.00	0.00	20.51	51.22	69.15	80.91	118.05	2598	2250	2250	CONC	0.10	59.0	6590.6	1.66	0.59	0.39
					0.00	47.09	0.00	0.00	0.00	2.68			0.00	0.00			0.00	0.00	14.34														
			0.30	0.65	0.54	47.64			0.00	2.68			0.00	0.00			0.00	0.00														
			1.00	0.65	1.81	49.44			0.00	2.68			0.00	0.00			0.00	0.00														
	111	112	1.45	0.40	1.61	51.06			0.00	2.68			0.00	0.00			0.00	0.00	21.10	50.32	67.92	79.47	115.93	2751	2250	2250	CONC	0.10	67.0	6590.6	1.66	0.67	0.42
	112	116	0.32	0.65	0.58	51.63			0.00	2.68			0.00	0.00			0.00	0.00	21.78	49.34	66.57	77.89	113.62	2726	2250	2250	CONC	0.10	67.0	6590.6	1.66	0.67	0.41
					0.00	51.63	0.00	0.00	0.00	2.68			0.00	0.00			0.00	0.00	12.27														
			0.19	0.65	0.34	51.98			0.00	2.68			0.00	0.00			0.00	0.00														
	116	117	0.99	0.65	1.79	53.77			0.00	2.68			0.00	0.00			0.00	0.00	22.45	48.39	65.29	76.38	111.41	2777	2250	2250	CONC	0.10	50.5	6590.6	1.66	0.51	0.42
To Unknown Road12 - 101, Pipe 117 - 118						53.77				2.68				0.00				0.00	22.96														
Contribution From Unknown Road4 - 04, Pipe 230 - 238						8.89				6.31				0.00				0.00	21.39														
Contribution From Unknown Road19 - 17, Pipe 237 - 238						3.42				0.00				0.00				0.00	16.23														
					0.00	12.31	0.05	0.65	0.09	6.40			0.00	0.00			0.00	0.00														
	238	239	0.50	0.65	0.90	13.21			0.00	6.40			0.00	0.00			0.00	0.00	21.39	49.89	67.33	78.78	114.92	1090	1200	1200	CONC	0.15	105.0	1510.0	1.34	1.31	0.72
	239	240	0.62	0.65	1.12	14.33			0.00	6.40			0.00	0.00			0.00	0.00	22.71	48.05	64.82	75.83	110.60	1103	1200	1200	CONC	0.15	105.5	1510.0	1.34	1.32	0.73
	240	241	0.11	0.65	0.20	14.53			0.00	6.40			0.00	0.00			0.00	0.00	24.02	46.35	62.50	73.11	106.61	1073	1200	1200	CONC	0.15	11.5	1510.0	1.34	0.14	0.71
	241	242	0.03	0.65	0.05	14.58			0.00	6.40			0.00	0.00			0.00	0.00	24.17	46.17	62.26	72.83	106.20	1072	1200	1200	CONC	0.15	6.0	1510.0	1.34	0.07	0.71
To Unknown Road12 - 101, Pipe 242 - 243						14.58				6.40				0.00				0.00	24.24														
Unknown Road12 - 101																																
Contribution From Unknown Road18 - 16, Pipe 116 - 117						53.77				2.68				0.00				0.00	22.96														
	117	118			0.00	53.77			0.00	2.68			0.00	0.00			0.00	0.00	22.96	47.71	64.36	75.29	109.81	2738	2250	2250	CONC	0.10	51.5	6590.6	1.66	0.52	0.42

Definitions:
Q = 2.78 AIR, where
Q = Peak Flow in Litres per second (L/s)
A = Areas in hectares (ha)
I = Rainfall Intensity (mm/h)
R = Runoff Coefficient

Notes:
1) Ottawa Rainfall-Intensity Curve
2) Min. Velocity = 0.80 m/s

Designed:	PROJECT:	
AK	**Caivan - Drummond Lands**	
Checked:	LOCATION:	
ADF	**City of Ottawa**	
Dwg. Reference:	File Ref:	Date:	Sheet No.
DWG. No. 2	19-1123	11 May 2020	SHEET 1 OF 2

STORM SEWER CALCULATION SHEET (RATIONAL METHOD)

Local Roads Return Frequency = 2 years
Collector Roads Return Frequency = 5 years
Manning 0.013 Arterial Roads Return Frequency = 10 years

	LOCATION		AREA (Ha)																FLOW						SEWER DATA							
			2 YEAR				5 YEAR				10 YEAR				100 YEAR				Time of	Intensity	Intensity	Intensity	Intensity	Peak Flow	DIA. (mm)	DIA. (mm)	TYPE	SLOPE	LENGTH	CAPACITY	VELOCITY	TIME OF	RATIO
			AREA	R	Indiv.	Accum.	AREA	R	Indiv.	Accum.	AREA	R	Indiv.	Accum.	AREA	R	Indiv.	Accum.	Conc.	2 Year	5 Year	10 Year	100 Year										
Location	From Node	To Node	(Ha)		2.78 AC	2.78 AC	(Ha)		2.78 AC	2.78 AC	(Ha)		2.78 AC	2.78 AC	(Ha)		2.78 AC	2.78 AC	(min)	(mm/h)	(mm/h)	(mm/h)	(mm/h)	Q (l/s)	(actual)	(nominal)		(%)	(m)	(l/s)	(m/s)	LOW (min	Q/Q full
Contribution From Unknown Road18 - 16, Pipe 241 - 242						14.58				6.40				0.00				0.00	24.24														
	242	243			0.00	14.58			0.00	6.40			0.00	0.00			0.00	0.00	24.24	46.08	62.14	72.68	105.98	1069	2250	2250	CONC	0.10	51.5	6590.6	1.66	0.52	0.16
Unknown Road22 - 20																																	
					0.00	0.00	0.00	0.00	0.00	0.00			0.00	0.00			0.00	0.00	17.05														
			0.14	0.65	0.25	0.25			0.00	0.00			0.00	0.00			0.00	0.00														
			0.89	0.65	1.61	1.86			0.00	0.00			0.00	0.00			0.00	0.00														
	228	230	2.28	0.65	4.12	5.98			0.00	0.00			0.00	0.00			0.00	0.00	17.05	57.33	77.48	90.71	132.42	343	675	675	CONC	0.45	56.5	563.9	1.58	0.60	0.61
To Unknown Road4 - 04, Pipe 230 - 238						5.98				0.00				0.00				0.00	17.64														
					0.00	0.00	0.00	0.00	0.00	0.00			0.00	0.00			0.00	0.00	11.60														
			0.22	0.65	0.40	0.40			0.00	0.00			0.00	0.00			0.00	0.00														
			0.86	0.65	1.55	1.95			0.00	0.00			0.00	0.00			0.00	0.00														
	307	308	0.91	0.65	1.64	3.60			0.00	0.00			0.00	0.00			0.00	0.00	11.60	71.15	96.42	112.99	165.12	256	450	450	CONC	2.35	51.0	437.1	2.75	0.31	0.59
	308	309	0.03	0.65	0.05	3.65			0.00	0.00			0.00	0.00			0.00	0.00	11.91	70.16	95.07	111.40	162.78	256	525	525	CONC	0.60	10.5	333.1	1.54	0.11	0.77
	309	312	0.07	0.65	0.13	3.78			0.00	0.00			0.00	0.00			0.00	0.00	12.03	69.81	94.58	110.82	161.93	264	600	600	CONC	0.30	57.5	336.3	1.19	0.81	0.78
To Unknown Road11 - 100, Pipe 312 - 900						3.78				0.00				0.00				0.00	12.83														
Unknown Road11 - 100																																	
Contribution From Unknown Road22 - 20, Pipe 309 - 312						3.78				0.00				0.00				0.00	12.83														
					0.00	3.78	0.00	0.00	0.00	0.00			0.00	0.00			0.00	0.00	11.06														
	312	900	0.80	0.65	1.45	5.22			0.00	0.00			0.00	0.00			0.00	0.00	12.83	67.41	91.28	106.94	156.24	352	600	600	CONC	0.55	22.0	455.4	1.61	0.23	0.77
To Unknown Road17 - 15, Pipe 900 - 901						5.22				0.00				0.00				0.00	13.06														
Unknown Road17 - 15																																	
Contribution From Unknown Road11 - 100, Pipe 312 - 900						5.22				0.00				0.00				0.00	13.06														
					0.00	5.22	0.00	0.00	0.00	0.00			0.00	0.00			0.00	0.00	11.77														
					0.00	5.22			0.00	0.00	0.14	0.65	0.25	0.25			0.00	0.00														
					0.00	5.22			0.00	0.00	3.72	0.90	9.31	9.56			0.00	0.00														
	900	901	6.06	0.65	10.95	16.17			0.00	0.00			0.00	9.56			0.00	0.00	13.06	66.76	90.40	105.90	154.70	2092	1650	1650	CONC	0.25	25.0	4557.2	2.13	0.20	0.46

Definitions:
Q = 2.78 AIR, where
Q = Peak Flow in Litres per second (L/s)
A = Areas in hectares (ha)
I = Rainfall Intensity (mm/h)
R = Runoff Coefficient

Notes:
1) Ottawa Rainfall-Intensity Curve
2) Min. Velocity = 0.80 m/s

Designed: AK	PROJECT: Caivan - Drummond Lands		
Checked: ADF	LOCATION: City of Ottawa		
Dwg. Reference: DWG. No. 2	File Ref: 19-1123	Date: 11 May 2020	Sheet No. SHEET 2 OF 2

NOTE:
FOR CROSS-SECTION A-A AND B-B, REFER TO DWG. No. 77

ANY DISTURBED AREA DURING CONSTRUCTION TO BE RESTORED TO THE ORIGINAL CONDITION OR BETTER TO THE SATISFACTION OF THE AUTHORITIES HAVING JURISDICTION

CONTRACTOR TO VERIFY THE PRECISE LOCATIONS AND INVERT ELEVATIONS OF Ex. UNDERGROUND SERVICES AND Ex. UTILITIES PRIOR TO STARTING CONSTRUCTION

PERMISSION REQUIRED FOR WORK ON ADJACENT LANDS

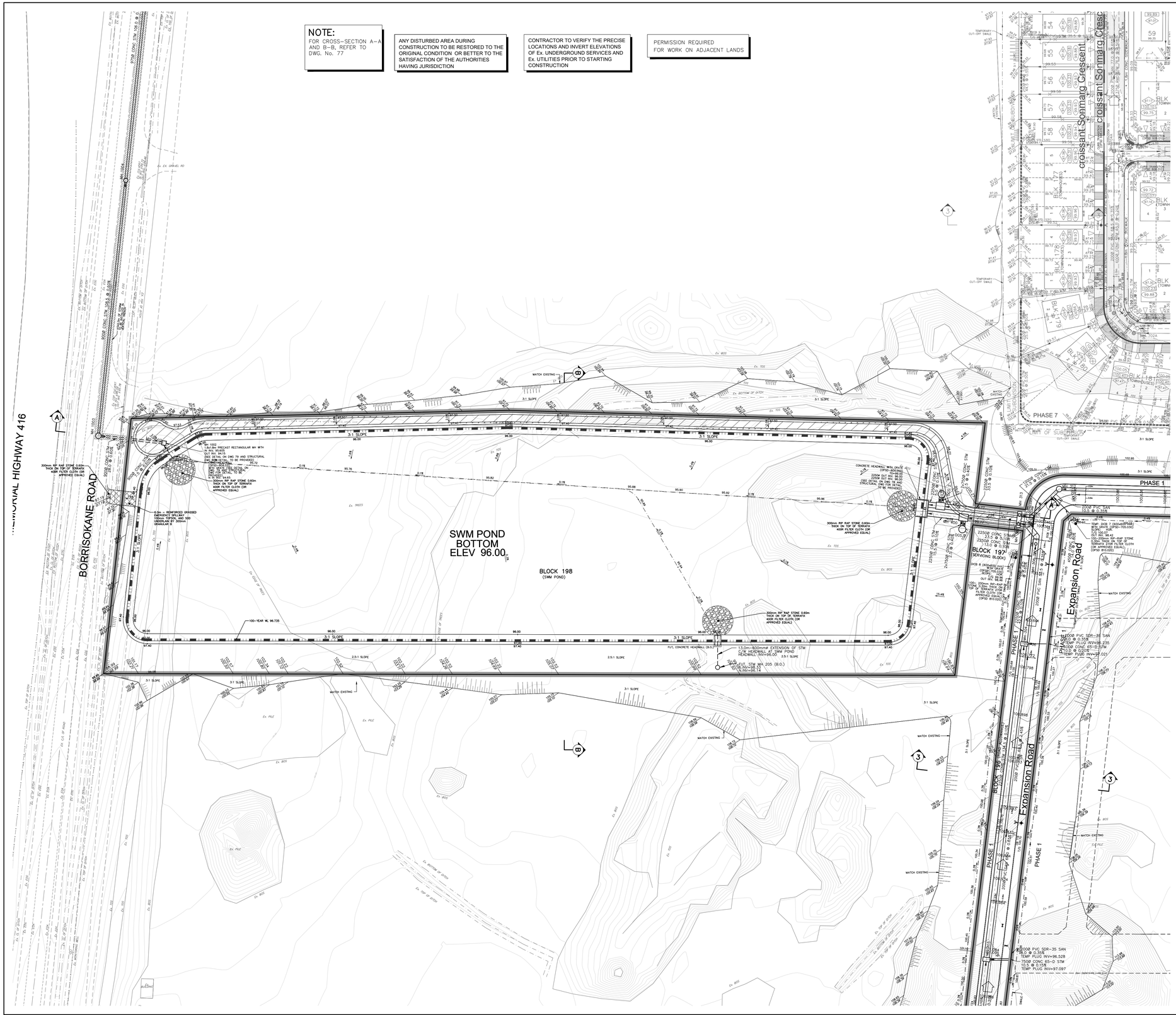
TRANSITIONAL HIGHWAY 416
BORRISOKANE ROAD
Ex. CREEK
Ex. DRAINS
Ex. EX. DRAINS RD
MH 1004
MH 1003
375Ø CONC STM @ 0.42%
450Ø CONC STM @ 0.42%
Ex. 600
Ex. 705
Ex. 805
Ex. 810
Ex. 815
Ex. 820
Ex. 825
Ex. 830
Ex. 835
Ex. 840
Ex. 845
Ex. 850
Ex. 855
Ex. 860
Ex. 865
Ex. 870
Ex. 875
Ex. 880
Ex. 885
Ex. 890
Ex. 895
Ex. 900
Ex. 905
Ex. 910
Ex. 915
Ex. 920
Ex. 925
Ex. 930
Ex. 935
Ex. 940
Ex. 945
Ex. 950
Ex. 955
Ex. 960
Ex. 965
Ex. 970
Ex. 975
Ex. 980
Ex. 985
Ex. 990
Ex. 995
Ex. 1000
Ex. 1005
Ex. 1010
Ex. 1015
Ex. 1020
Ex. 1025
Ex. 1030
Ex. 1035
Ex. 1040
Ex. 1045
Ex. 1050
Ex. 1055
Ex. 1060
Ex. 1065
Ex. 1070
Ex. 1075
Ex. 1080
Ex. 1085
Ex. 1090
Ex. 1095
Ex. 1100
Ex. 1105
Ex. 1110
Ex. 1115
Ex. 1120
Ex. 1125
Ex. 1130
Ex. 1135
Ex. 1140
Ex. 1145
Ex. 1150
Ex. 1155
Ex. 1160
Ex. 1165
Ex. 1170
Ex. 1175
Ex. 1180
Ex. 1185
Ex. 1190
Ex. 1195
Ex. 1200
Ex. 1205
Ex. 1210
Ex. 1215
Ex. 1220
Ex. 1225
Ex. 1230
Ex. 1235
Ex. 1240
Ex. 1245
Ex. 1250
Ex. 1255
Ex. 1260
Ex. 1265
Ex. 1270
Ex. 1275
Ex. 1280
Ex. 1285
Ex. 1290
Ex. 1295
Ex. 1300
Ex. 1305
Ex. 1310
Ex. 1315
Ex. 1320
Ex. 1325
Ex. 1330
Ex. 1335
Ex. 1340
Ex. 1345
Ex. 1350
Ex. 1355
Ex. 1360
Ex. 1365
Ex. 1370
Ex. 1375
Ex. 1380
Ex. 1385
Ex. 1390
Ex. 1395
Ex. 1400
Ex. 1405
Ex. 1410
Ex. 1415
Ex. 1420
Ex. 1425
Ex. 1430
Ex. 1435
Ex. 1440
Ex. 1445
Ex. 1450
Ex. 1455
Ex. 1460
Ex. 1465
Ex. 1470
Ex. 1475
Ex. 1480
Ex. 1485
Ex. 1490
Ex. 1495
Ex. 1500
Ex. 1505
Ex. 1510
Ex. 1515
Ex. 1520
Ex. 1525
Ex. 1530
Ex. 1535
Ex. 1540
Ex. 1545
Ex. 1550
Ex. 1555
Ex. 1560
Ex. 1565
Ex. 1570
Ex. 1575
Ex. 1580
Ex. 1585
Ex. 1590
Ex. 1595
Ex. 1600
Ex. 1605
Ex. 1610
Ex. 1615
Ex. 1620
Ex. 1625
Ex. 1630
Ex. 1635
Ex. 1640
Ex. 1645
Ex. 1650
Ex. 1655
Ex. 1660
Ex. 1665
Ex. 1670
Ex. 1675
Ex. 1680
Ex. 1685
Ex. 1690
Ex. 1695
Ex. 1700
Ex. 1705
Ex. 1710
Ex. 1715
Ex. 1720
Ex. 1725
Ex. 1730
Ex. 1735
Ex. 1740
Ex. 1745
Ex. 1750
Ex. 1755
Ex. 1760
Ex. 1765
Ex. 1770
Ex. 1775
Ex. 1780
Ex. 1785
Ex. 1790
Ex. 1795
Ex. 1800
Ex. 1805
Ex. 1810
Ex. 1815
Ex. 1820
Ex. 1825
Ex. 1830
Ex. 1835
Ex. 1840
Ex. 1845
Ex. 1850
Ex. 1855
Ex. 1860
Ex. 1865
Ex. 1870
Ex. 1875
Ex. 1880
Ex. 1885
Ex. 1890
Ex. 1895
Ex. 1900
Ex. 1905
Ex. 1910
Ex. 1915
Ex. 1920
Ex. 1925
Ex. 1930
Ex. 1935
Ex. 1940
Ex. 1945
Ex. 1950
Ex. 1955
Ex. 1960
Ex. 1965
Ex. 1970
Ex. 1975
Ex. 1980
Ex. 1985
Ex. 1990
Ex. 1995
Ex. 2000
Ex. 2005
Ex. 2010
Ex. 2015
Ex. 2020
Ex. 2025
Ex. 2030
Ex. 2035
Ex. 2040
Ex. 2045
Ex. 2050
Ex. 2055
Ex. 2060
Ex. 2065
Ex. 2070
Ex. 2075
Ex. 2080
Ex. 2085
Ex. 2090
Ex. 2095
Ex. 2100
Ex. 2105
Ex. 2110
Ex. 2115
Ex. 2120
Ex. 2125
Ex. 2130
Ex. 2135
Ex. 2140
Ex. 2145
Ex. 2150
Ex. 2155
Ex. 2160
Ex. 2165
Ex. 2170
Ex. 2175
Ex. 2180
Ex. 2185
Ex. 2190
Ex. 2195
Ex. 2200
Ex. 2205
Ex. 2210
Ex. 2215
Ex. 2220
Ex. 2225
Ex. 2230
Ex. 2235
Ex. 2240
Ex. 2245
Ex. 2250
Ex. 2255
Ex. 2260
Ex. 2265
Ex. 2270
Ex. 2275
Ex. 2280
Ex. 2285
Ex. 2290
Ex. 2295
Ex. 2300
Ex. 2305
Ex. 2310
Ex. 2315
Ex. 2320
Ex. 2325
Ex. 2330
Ex. 2335
Ex. 2340
Ex. 2345
Ex. 2350
Ex. 2355
Ex. 2360
Ex. 2365
Ex. 2370
Ex. 2375
Ex. 2380
Ex. 2385
Ex. 2390
Ex. 2395
Ex. 2400
Ex. 2405
Ex. 2410
Ex. 2415
Ex. 2420
Ex. 2425
Ex. 2430
Ex. 2435
Ex. 2440
Ex. 2445
Ex. 2450
Ex. 2455
Ex. 2460
Ex. 2465
Ex. 2470
Ex. 2475
Ex. 2480
Ex. 2485
Ex. 2490
Ex. 2495
Ex. 2500
Ex. 2505
Ex. 2510
Ex. 2515
Ex. 2520
Ex. 2525
Ex. 2530
Ex. 2535
Ex. 2540
Ex. 2545
Ex. 2550
Ex. 2555
Ex. 2560
Ex. 2565
Ex. 2570
Ex. 2575
Ex. 2580
Ex. 2585
Ex. 2590
Ex. 2595
Ex. 2600
Ex. 2605
Ex. 2610
Ex. 2615
Ex. 2620
Ex. 2625
Ex. 2630
Ex. 2635
Ex. 2640
Ex. 2645
Ex. 2650
Ex. 2655
Ex. 2660
Ex. 2665
Ex. 2670
Ex. 2675
Ex. 2680
Ex. 2685
Ex. 2690
Ex. 2695
Ex. 2700
Ex. 2705
Ex. 2710
Ex. 2715
Ex. 2720
Ex. 2725
Ex. 2730
Ex. 2735
Ex. 2740
Ex. 2745
Ex. 2750
Ex. 2755
Ex. 2760
Ex. 2765
Ex. 2770
Ex. 2775
Ex. 2780
Ex. 2785
Ex. 2790
Ex. 2795
Ex. 2800
Ex. 2805
Ex. 2810
Ex. 2815
Ex. 2820
Ex. 2825
Ex. 2830
Ex. 2835
Ex. 2840
Ex. 2845
Ex. 2850
Ex. 2855
Ex. 2860
Ex. 2865
Ex. 2870
Ex. 2875
Ex. 2880
Ex. 2885
Ex. 2890
Ex. 2895
Ex. 2900
Ex. 2905
Ex. 2910
Ex. 2915
Ex. 2920
Ex. 2925
Ex. 2930
Ex. 2935
Ex. 2940
Ex. 2945
Ex. 2950
Ex. 2955
Ex. 2960
Ex. 2965
Ex. 2970
Ex. 2975
Ex. 2980
Ex. 2985
Ex. 2990
Ex. 2995
Ex. 3000
Ex. 3005
Ex. 3010
Ex. 3015
Ex. 3020
Ex. 3025
Ex. 3030
Ex. 3035
Ex. 3040
Ex. 3045
Ex. 3050
Ex. 3055
Ex. 3060
Ex. 3065
Ex. 3070
Ex. 3075
Ex. 3080
Ex. 3085
Ex. 3090
Ex. 3095
Ex. 3100
Ex. 3105
Ex. 3110
Ex. 3115
Ex. 3120
Ex. 3125
Ex. 3130
Ex. 3135
Ex. 3140
Ex. 3145
Ex. 3150
Ex. 3155
Ex. 3160
Ex. 3165
Ex. 3170
Ex. 3175
Ex. 3180
Ex. 3185
Ex. 3190
Ex. 3195
Ex. 3200
Ex. 3205
Ex. 3210
Ex. 3215
Ex. 3220
Ex. 3225
Ex. 3230
Ex. 3235
Ex. 3240
Ex. 3245
Ex. 3250
Ex. 3255
Ex. 3260
Ex. 3265
Ex. 3270
Ex. 3275
Ex. 3280
Ex. 3285
Ex. 3290
Ex. 3295
Ex. 3300
Ex. 3305
Ex. 3310
Ex. 3315
Ex. 3320
Ex. 3325
Ex. 3330
Ex. 3335
Ex. 3340
Ex. 3345
Ex. 3350
Ex. 3355
Ex. 3360
Ex. 3365
Ex. 3370
Ex. 3375
Ex. 3380
Ex. 3385
Ex. 3390
Ex. 3395
Ex. 3400
Ex. 3405
Ex. 3410
Ex. 3415
Ex. 3420
Ex. 3425
Ex. 3430
Ex. 3435
Ex. 3440
Ex. 3445
Ex. 3450
Ex. 3455
Ex. 3460
Ex. 3465
Ex. 3470
Ex. 3475
Ex. 3480
Ex. 3485
Ex. 3490
Ex. 3495
Ex. 3500
Ex. 3505
Ex. 3510
Ex. 3515
Ex. 3520
Ex. 3525
Ex. 3530
Ex. 3535
Ex. 3540
Ex. 3545
Ex. 3550
Ex. 3555
Ex. 3560
Ex. 3565
Ex. 3570
Ex. 3575
Ex. 3580
Ex. 3585
Ex. 3590
Ex. 3595
Ex. 3600
Ex. 3605
Ex. 3610
Ex. 3615
Ex. 3620
Ex. 3625
Ex. 3630
Ex. 3635
Ex. 3640
Ex. 3645
Ex. 3650
Ex. 3655
Ex. 3660
Ex. 3665
Ex. 3670
Ex. 3675
Ex. 3680
Ex. 3685
Ex. 3690
Ex. 3695
Ex. 3700
Ex. 3705
Ex. 3710
Ex. 3715
Ex. 3720
Ex. 3725
Ex. 3730
Ex. 3735
Ex. 3740
Ex. 3745
Ex. 3750
Ex. 3755
Ex. 3760
Ex. 3765
Ex. 3770
Ex. 3775
Ex. 3780
Ex. 3785
Ex. 3790
Ex. 3795
Ex. 3800
Ex. 3805
Ex. 3810
Ex. 3815
Ex. 3820
Ex. 3825
Ex. 3830
Ex. 3835
Ex. 3840
Ex. 3845
Ex. 3850
Ex. 3855
Ex. 3860
Ex. 3865
Ex. 3870
Ex. 3875
Ex. 3880
Ex. 3885
Ex. 3890
Ex. 3895
Ex. 3900
Ex. 3905
Ex. 3910
Ex. 3915
Ex. 3920
Ex. 3925
Ex. 3930
Ex. 3935
Ex. 3940
Ex. 3945
Ex. 3950
Ex. 3955
Ex. 3960
Ex. 3965
Ex. 3970
Ex. 3975
Ex. 3980
Ex. 3985
Ex. 3990
Ex. 3995
Ex. 4000
Ex. 4005
Ex. 4010
Ex. 4015
Ex. 4020
Ex. 4025
Ex. 4030
Ex. 4035
Ex. 4040
Ex. 4045
Ex. 4050
Ex. 4055
Ex. 4060
Ex. 4065
Ex. 4070
Ex. 4075
Ex. 4080
Ex. 4085
Ex. 4090
Ex. 4095
Ex. 4100
Ex. 4105
Ex. 4110
Ex. 4115
Ex. 4120
Ex. 4125
Ex. 4130
Ex. 4135
Ex. 4140
Ex. 4145
Ex. 4150
Ex. 4155
Ex. 4160
Ex. 4165
Ex. 4170
Ex. 4175
Ex. 4180
Ex. 4185
Ex. 4190
Ex. 4195
Ex. 4200
Ex. 4205
Ex. 4210
Ex. 4215
Ex. 4220
Ex. 4225
Ex. 4230
Ex. 4235
Ex. 4240
Ex. 4245
Ex. 4250
Ex. 4255
Ex. 4260
Ex. 4265
Ex. 4270
Ex. 4275
Ex. 4280
Ex. 4285
Ex. 4290
Ex. 4295
Ex. 4300
Ex. 4305
Ex. 4310
Ex. 4315
Ex. 4320
Ex. 4325
Ex. 4330
Ex. 4335
Ex. 4340
Ex. 4345
Ex. 4350
Ex. 4355
Ex. 4360
Ex. 4365
Ex. 4370
Ex. 4375
Ex. 4380
Ex. 4385
Ex. 4390
Ex. 4395
Ex. 4400
Ex. 4405
Ex. 4410
Ex. 4415
Ex. 4420
Ex. 4425
Ex. 4430
Ex. 4435
Ex. 4440
Ex. 4445
Ex. 4450
Ex. 4455
Ex. 4460
Ex. 4465
Ex. 4470
Ex. 4475
Ex. 4480
Ex. 4485
Ex. 4490
Ex. 4495
Ex. 4500
Ex. 4505
Ex. 4510
Ex. 4515
Ex. 4520
Ex. 4525
Ex. 4530
Ex. 4535
Ex. 4540
Ex. 4545
Ex. 4550
Ex. 4555
Ex. 4560
Ex. 4565
Ex. 4570
Ex. 4575
Ex. 4580
Ex. 4585
Ex. 4590
Ex. 4595
Ex. 4600
Ex. 4605
Ex. 4610
Ex. 4615
Ex. 4620
Ex. 4625
Ex. 4630
Ex. 4635
Ex. 4640
Ex. 4645
Ex. 4650
Ex. 4655
Ex. 4660
Ex. 4665
Ex. 4670
Ex. 4675
Ex. 4680
Ex. 4685
Ex. 4690
Ex. 4695
Ex. 4700
Ex. 4705
Ex. 4710
Ex. 4715
Ex. 4720
Ex. 4725
Ex. 4730
Ex. 4735
Ex. 4740
Ex. 4745
Ex. 4750
Ex. 4755
Ex. 4760
Ex. 4765
Ex. 4770
Ex. 4775
Ex. 4780
Ex. 4785
Ex. 4790
Ex. 4795
Ex. 4800
Ex. 4805
Ex. 4810
Ex. 4815
Ex. 4820
Ex. 4825
Ex. 4830
Ex. 4835
Ex. 4840
Ex. 4845
Ex. 4850
Ex. 4855
Ex. 4860
Ex. 4865
Ex. 4870
Ex. 4875
Ex. 4880
Ex. 4885
Ex. 4890
Ex. 4895
Ex. 4900
Ex. 4905
Ex. 4910
Ex. 4915
Ex. 4920
Ex. 4925
Ex. 4930
Ex. 4935
Ex. 4940
Ex. 4945
Ex. 4950
Ex. 4955
Ex. 4960
Ex. 4965
Ex. 4970
Ex. 4975
Ex. 4980
Ex. 4985
Ex. 4990
Ex. 4995
Ex. 5000
Ex. 5005
Ex. 5010
Ex. 5015
Ex. 5020
Ex. 5025
Ex. 5030
Ex. 5035
Ex. 5040
Ex. 5045
Ex. 5050
Ex. 5055
Ex. 5060
Ex. 5065
Ex. 5070
Ex. 5075
Ex. 5080
Ex. 5085
Ex. 5090
Ex. 5095
Ex. 5100
Ex. 5105
Ex. 5110
Ex. 5115
Ex. 5120
Ex. 5125
Ex. 5130
Ex. 5135
Ex. 5140
Ex. 5145
Ex. 5150
Ex. 5155
Ex. 5160
Ex. 5165
Ex. 5170
Ex. 5175
Ex. 5180
Ex. 5185
Ex. 5190
Ex. 5195
Ex. 5200
Ex. 5205
Ex. 5210
Ex. 5215
Ex. 5220
Ex. 5225
Ex. 5230
Ex. 5235
Ex. 5240
Ex. 5245
Ex. 5250
Ex. 5255
Ex. 5260
Ex. 5265
Ex. 5270
Ex. 5275
Ex. 5280
Ex. 5285
Ex. 5290
Ex. 5295
Ex. 5300
Ex. 5305
Ex. 5310
Ex. 5315
Ex. 5320
Ex. 5325
Ex. 5330
Ex. 5335
Ex. 5340
Ex. 5345
Ex. 5350
Ex. 5355
Ex. 5360
Ex. 5365
Ex. 5370
Ex. 5375
Ex. 5380
Ex. 5385
Ex. 5390
Ex. 5395
Ex. 5400
Ex. 5405
Ex. 5410
Ex. 5415
Ex. 5420
Ex. 5425
Ex. 5430
Ex. 5435
Ex. 5440
Ex. 5445
Ex. 5450
Ex. 5455
Ex. 5460
Ex. 5465
Ex. 5470
Ex. 5475
Ex. 5480
Ex. 5485
Ex. 5490
Ex. 5495
Ex. 5500
Ex. 5505
Ex. 5510
Ex. 5515
Ex. 5520
Ex. 5525
Ex. 5530
Ex. 5535
Ex. 5540
Ex. 5545
Ex. 5550
Ex. 5555
Ex. 5560
Ex. 5565
Ex. 5570
Ex. 5575
Ex. 5580
Ex. 5585
Ex. 5590
Ex. 5595
Ex. 5600
Ex. 5605
Ex. 5610
Ex. 5615
Ex. 5620
Ex. 5625
Ex. 5630
Ex. 5635
Ex. 5640
Ex. 5645
Ex. 5650
Ex. 5655
Ex. 5660
Ex. 5665
Ex. 5670
Ex. 5675
Ex. 5680
Ex. 5685
Ex. 5690
Ex. 5695
Ex. 5700
Ex. 5705
Ex. 5710
Ex. 5715
Ex. 5720
Ex. 5725
Ex. 5730
Ex. 5735
Ex. 5740
Ex. 5745
Ex. 5750
Ex. 5755
Ex. 5760
Ex. 5765
Ex. 5770
Ex. 5775
Ex. 5780
Ex. 5785
Ex. 5790
Ex. 5795
Ex. 5800
Ex. 5805
Ex. 5810
Ex. 5815
Ex. 5820
Ex. 5825
Ex. 5830
Ex. 5835
Ex. 5840
Ex. 5845
Ex. 5850
Ex. 5855
Ex. 5860
Ex. 5865
Ex. 5870
Ex. 5875
Ex. 5880
Ex. 5885
Ex. 5890
Ex. 5895
Ex. 5900
Ex. 5905
Ex. 5910
Ex. 5915
Ex. 5920
Ex. 5925
Ex. 5930
Ex. 5935
Ex. 5940
Ex. 5945
Ex. 5950
Ex. 5955
Ex. 5960
Ex. 5965
Ex. 5970
Ex. 5975
Ex. 5980
Ex. 5985
Ex. 5990
Ex. 5995
Ex. 6000
Ex. 6005
Ex. 6010
Ex. 6015
Ex. 6020
Ex. 6025
Ex. 6030
Ex. 6035
Ex. 6040
Ex. 6045
Ex. 6050
Ex. 6055
Ex. 6060
Ex. 6065
Ex. 6070
Ex. 6075
Ex. 6080
Ex. 6085
Ex. 6090
Ex. 6095
Ex. 6100
Ex. 6105
Ex. 6110
Ex. 6115
Ex. 6120
Ex. 6125
Ex. 6130
Ex. 6135
Ex. 6140
Ex. 6145
Ex. 6150
Ex. 6155
Ex. 6160
Ex. 6165
Ex. 6170
Ex. 6175
Ex. 6180
Ex. 6185
Ex. 6190
Ex. 6195
Ex. 6200
Ex. 6205
Ex. 6210
Ex. 6215
Ex. 6220
Ex. 6225
Ex. 6230
Ex. 6235
Ex. 6240
Ex. 6245
Ex. 6250
Ex. 6255
Ex. 6260
Ex. 6265
Ex. 6270
Ex. 6275
Ex. 6280
Ex. 6285
Ex. 6290
Ex. 6295
Ex. 6300
Ex. 6305
Ex. 6310
Ex. 6315
Ex. 6320
Ex. 6325
Ex. 6330
Ex. 6335
Ex. 6340
Ex. 6345
Ex. 6350
Ex. 6355
Ex. 6360
Ex. 6365
Ex. 6370
Ex. 6375
Ex. 6380
Ex. 6385
Ex. 6390
Ex. 6395
Ex. 6400
Ex. 6405
Ex. 6410
Ex. 6415
Ex. 6420
Ex. 6425
Ex. 6430
Ex. 6435
Ex. 6440
Ex. 6445
Ex. 6450
Ex. 6455
Ex. 6460
Ex. 6465
Ex. 6470
Ex. 6475
Ex. 6480
Ex. 6485
Ex. 6490
Ex. 6495
Ex. 6500
Ex. 6505
Ex. 6510
Ex. 6515
Ex. 6520
Ex. 6525
Ex. 6530
Ex. 6535
Ex. 6540
Ex. 6545
Ex. 6550
Ex. 6555
Ex. 6560
Ex. 6565
Ex. 6570
Ex. 6575
Ex. 6580
Ex. 6585
Ex. 6590
Ex. 6595
Ex. 6600
Ex. 6605
Ex. 6610
Ex. 6615
Ex. 6620
Ex. 6625
Ex. 6630
Ex. 6635
Ex. 6640
Ex. 6645
Ex. 6650
Ex. 6655
Ex. 6660
Ex. 6665
Ex. 6670
Ex. 6675
Ex. 6680
Ex. 6685
Ex. 6690
Ex. 6695
Ex. 6700
Ex. 6705
Ex. 6710
Ex. 6715
Ex. 6720
Ex. 6725
Ex. 6730
Ex. 6735
Ex. 6740
Ex. 6745
Ex. 6750
Ex. 6755
Ex. 6760
Ex. 6765
Ex. 6770
Ex. 6775
Ex. 6780
Ex. 6785
Ex. 6790
Ex. 6795
Ex. 6800
Ex. 6805
Ex. 6810
Ex. 6815
Ex. 6820
Ex. 6825
Ex. 6830
Ex. 6835
Ex. 6840
Ex. 6845
Ex. 6850
Ex. 6855
Ex. 6860
Ex. 6865
Ex. 6870
Ex. 6875
Ex. 6880
Ex. 6885
Ex. 6890
Ex. 6895
Ex. 6900
Ex. 6905
Ex. 6910
Ex. 6915
Ex. 6920
Ex. 6925
Ex. 6930
Ex. 6935
Ex. 6940
Ex. 6945
Ex. 6950
Ex. 6955
Ex. 6960
Ex. 6965
Ex. 6970
Ex. 6975
Ex. 6980
Ex. 6985
Ex. 6990
Ex. 6995
Ex. 7000
Ex. 7005
Ex. 7010
Ex. 7015
Ex. 7020
Ex. 7025
Ex. 7030
Ex. 7035
Ex. 7040
Ex. 7045
Ex. 7050
Ex. 7055
Ex. 7060
Ex. 7065
Ex. 7070
Ex. 7075
Ex. 7080
Ex. 7085
Ex. 7090
Ex. 7095
Ex. 7100
Ex. 7105
Ex. 7110
Ex. 7115
Ex. 7120
Ex. 7125
Ex. 7130
Ex. 7135
Ex. 7140
Ex. 7145
Ex. 7150
Ex. 7155
Ex. 7160
Ex. 7165
Ex. 7170
Ex. 7175
Ex. 7180
Ex. 7185
Ex. 7190
Ex. 7195
Ex. 7200
Ex. 7205
Ex. 7210
Ex. 7215
Ex. 7220
Ex. 7225
Ex. 7230
Ex. 7235
Ex. 7240
Ex. 7245
Ex. 7250
Ex. 7255
Ex. 7260
Ex. 7265
Ex. 7270
Ex. 7275
Ex. 7280
Ex. 7285
Ex. 7290
Ex. 7295
Ex. 7300
Ex. 7305
Ex. 7310
Ex. 7315
Ex. 7320
Ex. 7325
Ex. 7330
Ex. 7335
Ex. 7340
Ex. 7345
Ex. 7350
Ex. 7355
Ex. 7360
Ex. 7365
Ex. 7370
Ex. 7375
Ex. 7380
Ex. 7385
Ex. 7390
Ex. 7395
Ex. 7400
Ex. 7405
Ex. 7410
Ex. 7415
Ex. 7420
Ex. 7425
Ex. 7430
Ex. 7435
Ex. 7440
Ex. 7445
Ex. 7450
Ex. 7455
Ex. 7460
Ex. 7465
Ex. 7470
Ex. 7475
Ex. 7480
Ex. 7485
Ex. 7490
Ex. 7495
Ex. 7500
Ex. 7505
Ex. 7510
Ex. 7515
Ex. 7520
Ex. 7525
Ex. 7530
Ex. 7535
Ex. 7540
Ex. 7545
Ex. 7550
Ex. 7555
Ex. 7560
Ex. 7565
Ex. 7570
Ex. 7575
Ex. 7580
Ex. 7585
Ex. 7590
Ex. 7595
Ex. 7600
Ex. 7605
Ex. 7610
Ex. 7615
Ex. 7620
Ex. 7625
Ex. 7630
Ex. 7635
Ex. 7640
Ex. 7645
Ex. 7650
Ex. 7655
Ex. 7660
Ex. 7665
Ex. 7670
Ex. 7675
Ex. 7680
Ex. 7685
Ex. 7690
Ex. 7695
Ex. 7700
Ex. 7705
Ex. 7710
Ex. 7715
Ex. 7720
Ex. 7725
Ex. 7730
Ex. 7735
Ex. 7740
Ex. 7745
Ex. 7750
Ex. 7755
Ex. 7760
Ex. 7765
Ex. 7770
Ex. 7775
Ex. 7780
Ex. 7785
Ex. 7790
Ex. 7795
Ex. 7800
Ex. 7805
Ex. 7810
Ex. 7815
Ex. 7820
Ex. 7825
Ex. 7830
Ex. 7835
Ex. 7840
Ex. 7845
Ex. 7850
Ex. 7855
Ex. 7860
Ex. 7865
Ex. 7870
Ex. 7875
Ex. 7880
Ex. 7885
Ex. 7890
Ex. 7895
Ex. 7900
Ex. 7905
Ex. 7910
Ex. 7915
Ex. 7920
Ex. 7925
Ex. 7930
Ex. 7935
Ex. 7940
Ex. 7945
Ex. 7950
Ex. 7955
Ex. 7960
Ex. 7965
Ex. 7970
Ex. 7975
Ex. 7980
Ex. 7985
Ex. 7990
Ex. 7995
Ex. 8000
Ex. 8005
Ex. 8010
Ex. 8015
Ex. 8020
Ex. 8025
Ex. 8030
Ex. 8035
Ex. 8040
Ex. 8045
Ex. 8050
Ex. 8055
Ex. 8060
Ex. 8065
Ex. 8070
Ex. 8075
Ex. 8080
Ex. 8085
Ex. 8090
Ex. 8095
Ex. 8100
Ex. 8105
Ex. 8110
Ex. 8115
Ex. 8120
Ex. 8125
Ex. 8130
Ex. 8135
Ex. 8140
Ex. 8145
Ex. 8150
Ex. 8155
Ex. 8160
Ex. 8165
Ex. 8170
Ex. 8175
Ex. 8180
Ex. 8185
Ex. 8190
Ex. 8195
Ex. 8200
Ex. 8205
Ex. 8210
Ex. 8215
Ex. 8220
Ex. 8225
Ex. 8230
Ex. 8235
Ex. 8240
Ex. 8245
Ex. 8250
Ex. 8255
Ex. 8260
Ex. 8265
Ex. 8270
Ex. 8275
Ex. 8280
Ex. 8285
Ex. 8290
Ex. 8295
Ex. 8300
Ex. 8305
Ex. 8310
Ex. 8315
Ex. 8320
Ex. 8325
Ex. 8330
Ex. 8335
Ex. 8340
Ex. 8345
Ex. 8350
Ex. 8355
Ex. 8360
Ex. 8365
Ex. 8370
Ex. 8375
Ex. 8380
Ex. 8385
Ex. 8390
Ex. 8395
Ex. 8400
Ex. 8405
Ex. 8410
Ex. 8415
Ex. 8420
Ex. 8425
Ex. 8430
Ex. 8435
Ex. 8440
Ex. 8445
Ex. 8450
Ex. 8455
Ex. 8460
Ex. 8465
Ex. 8470
Ex. 8475
Ex. 8480
Ex. 8485
Ex. 8490
Ex. 8495
Ex. 8500
Ex. 8505
Ex. 8510
Ex. 8515
Ex. 8520
Ex. 8525
Ex. 8530
Ex. 8535
Ex. 8540
Ex. 8545
Ex. 8550
Ex. 8555
Ex. 8560
Ex. 8565
Ex. 8570
Ex. 8575
Ex. 8580
Ex. 8585
Ex. 8590
Ex. 8595
Ex. 8600
Ex. 8605
Ex. 8610
Ex. 8615
Ex. 8620
Ex. 8625
Ex. 8630
Ex. 8635
Ex. 8640
Ex. 8645
Ex. 8650
Ex. 8655
Ex. 8660
Ex. 8665
Ex. 8670
Ex. 8675
Ex. 8680
Ex. 8685
Ex. 8690
Ex. 8695
Ex. 8700
Ex. 8705
Ex. 8710
Ex. 8715
Ex. 8720
Ex. 8725
Ex. 8730
Ex. 8735
Ex. 8740
Ex. 8745
Ex. 8750
Ex. 8755
Ex. 8760
Ex. 8765
Ex. 8770
Ex. 8775
Ex. 8780
Ex. 8785
Ex. 8790
Ex. 8795
Ex. 8800
Ex. 8805
Ex. 8810
Ex. 8815
Ex. 8820
Ex. 8825
Ex. 8830
Ex. 8835
Ex. 8840
Ex. 8845
Ex. 8850
Ex. 8855
Ex. 8860
Ex. 8865
Ex. 8870
Ex. 8875
Ex. 8880
Ex. 8885
Ex. 8890
Ex. 8895
Ex. 8900
Ex. 8905
Ex. 8910
Ex. 8915
Ex. 8920
Ex. 8925
Ex. 8930
Ex. 8935
Ex. 8940
Ex. 8945
Ex. 8950
Ex. 8955
Ex. 8960
Ex. 8965
Ex. 8970
Ex. 8975
Ex. 8980
Ex. 8985
Ex. 8990
Ex. 8995
Ex. 9000
Ex. 9005
Ex. 9010
Ex. 9015
Ex. 9020
Ex. 9025
Ex. 9030
Ex. 9035
Ex. 9040
Ex. 9045
Ex. 9050
Ex. 9055
Ex. 9060
Ex. 9065
Ex. 9070
Ex. 9075
Ex. 9080
Ex. 9085
Ex. 9090
Ex. 9095
Ex. 9100
Ex. 9105
Ex. 9110
Ex. 9115
Ex. 9120
Ex. 9125
Ex. 9130
Ex. 9135
Ex. 9140
Ex. 9145
Ex. 9150
Ex. 9155
Ex. 9160
Ex. 9165
Ex. 9170
Ex. 9175
Ex. 9180
Ex. 9185
Ex. 9190
Ex. 9195
Ex. 9200
Ex. 9205
Ex. 9210
Ex. 9215
Ex. 9220
Ex. 9225
Ex. 9230
Ex. 9235
Ex. 9240
Ex. 9245
Ex. 9250
Ex. 9255
Ex. 9260
Ex. 9265
Ex. 9270
Ex. 9275
Ex. 9280
Ex. 9285
Ex. 9290
Ex. 9295
Ex. 9300
Ex. 9305
Ex. 9310
Ex. 9315
Ex. 9320
Ex. 9325
Ex. 9330
Ex. 9335
Ex. 9340
Ex. 9345
Ex. 9350
Ex. 9355
Ex. 9360
Ex. 9365
Ex. 9370
Ex. 9375
Ex. 9380
Ex. 9385
Ex. 9390
Ex. 9395
Ex. 9400
Ex. 9405
Ex. 9410
Ex. 9415
Ex. 9420
Ex. 9425
Ex. 9430
Ex. 9435
Ex. 9440
Ex. 9445
Ex. 9450
Ex. 9455
Ex. 9460
Ex. 9465
Ex. 9470
Ex. 9475
Ex. 9480
Ex. 9485
Ex. 9490
Ex. 9495
Ex. 9500
Ex. 9505
Ex. 9510
Ex. 9515
Ex. 9520
Ex. 9525
Ex. 9530
Ex. 9535
Ex. 9540
Ex. 9545
Ex. 9550
Ex. 9555
Ex. 9560
Ex. 9565
Ex. 9570
Ex. 9575
Ex. 9580
Ex. 9585
Ex. 9590
Ex. 9595
Ex. 9600
Ex. 9605
Ex. 9610
Ex. 9615
Ex. 9620
Ex. 9625
Ex. 9630
Ex. 9635
Ex. 9640
Ex. 9645
Ex. 9650
Ex. 9655
Ex. 9660
Ex. 9665
Ex. 9670
Ex. 9675
Ex. 9680
Ex. 9685
Ex. 9690
Ex. 9695
Ex. 9700
Ex. 9705
Ex. 9710
Ex. 9715
Ex. 9720
Ex. 9725
Ex. 9730
Ex. 9735
Ex. 9740
Ex. 9745
Ex. 9750
Ex. 9755
Ex. 9760
Ex. 9765
Ex. 9770
Ex. 9775
Ex. 9780
Ex. 9785
Ex. 9790
Ex. 9795
Ex. 9800
Ex. 9805
Ex. 9810
Ex. 9815
Ex. 9820
Ex. 9825
Ex. 9830
Ex. 9835
Ex. 9840
Ex. 9845
Ex. 9850
Ex. 9855
Ex. 9860
Ex. 9865
Ex. 9870
Ex. 9875
Ex. 9880
Ex. 9885
Ex. 9890
Ex. 9895
Ex. 9900
Ex. 9905
Ex. 9910
Ex. 9915
Ex. 9920
Ex. 9925
Ex. 9930
Ex. 9935
Ex. 9940
Ex. 9945
Ex. 9950
Ex. 9955
Ex. 9960
Ex. 9965
Ex. 9970
Ex. 9975
Ex. 9980
Ex. 9985
Ex. 9990
Ex. 9995
Ex. 10000
Ex. 10005
Ex. 10010
Ex. 10015
Ex. 10020
Ex. 10025
Ex. 10030
Ex. 10035
Ex. 10040
Ex. 10045
Ex. 10050
Ex. 10055
Ex. 10060
Ex. 10065
Ex. 10070
Ex. 10075
Ex. 10080
Ex. 10085
Ex. 10090
Ex. 10095
Ex. 10100
Ex. 10105
Ex. 10110
Ex. 10115
Ex. 10120
Ex. 10125
Ex. 10130
Ex. 10135
Ex. 10140
Ex. 10145
Ex. 10150
Ex. 10155
Ex. 10160
Ex. 10165
Ex. 10170
Ex. 10175
Ex. 10180
Ex. 10185
Ex. 10190
Ex. 10195
Ex. 10200
Ex. 10205
Ex. 10210
Ex. 10215
Ex. 10220
Ex. 10225
Ex. 10230
Ex. 10235
Ex. 10240
Ex. 10245
Ex. 10250
Ex. 10255
Ex. 10260
Ex. 10265
Ex. 10270
Ex. 10275
Ex. 10280
Ex. 10285
Ex. 10290
Ex. 10295
Ex. 10300
Ex. 10305
Ex. 10310
Ex. 10315
Ex. 10320
Ex. 10325
Ex. 10330
Ex. 10335
Ex. 10340
Ex. 10345
Ex. 10350
Ex. 10355
Ex. 10360
Ex. 10365
Ex. 10370
Ex. 10375
Ex. 10380
Ex. 10385
Ex. 10390
Ex. 10395
Ex. 10400
Ex. 10405
Ex. 10410
Ex. 10415
Ex. 10420
Ex. 10425
Ex. 10430
Ex. 10435
Ex. 10440
Ex. 10445
Ex. 10450
Ex. 10455
Ex. 10460
Ex. 10465
Ex. 10470
Ex. 10475
Ex. 10480
Ex. 10485
Ex. 10490
Ex. 10495
Ex. 10500
Ex. 10505
Ex. 10510
Ex. 10515
Ex. 10520
Ex. 10525
Ex. 10530
Ex. 10535
Ex. 10540
Ex. 10545

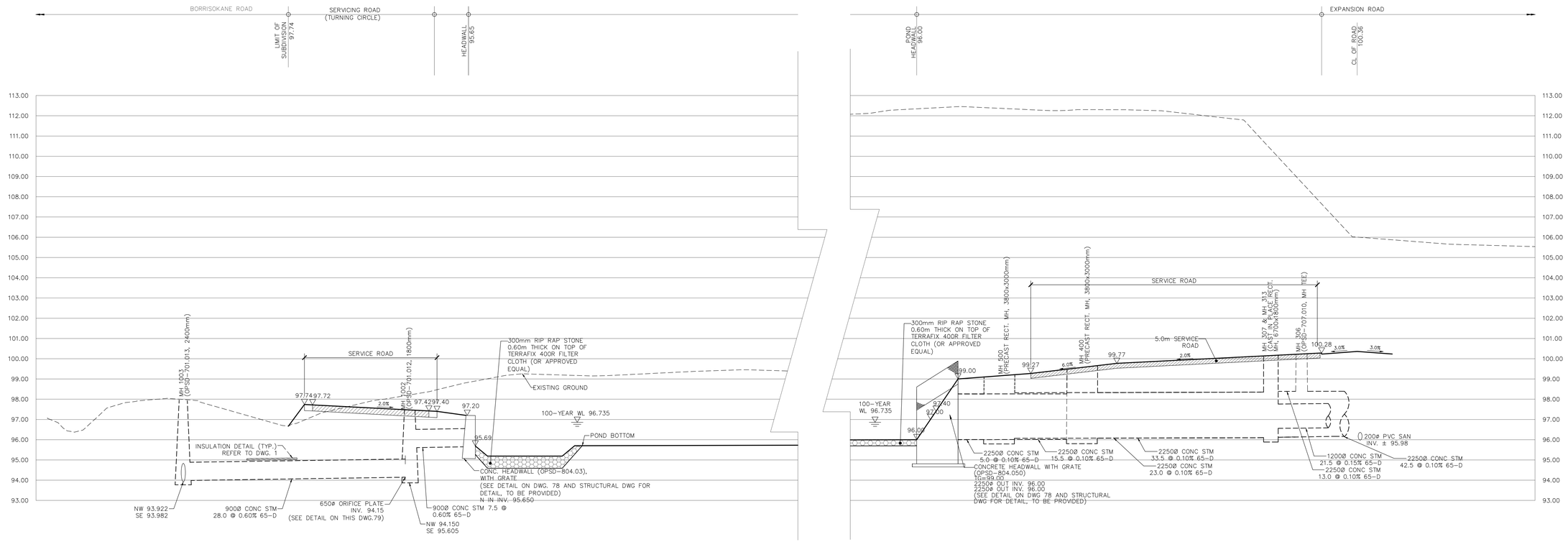

SECTION A–A
SCALE HOR. 1:250
VER. 1:100

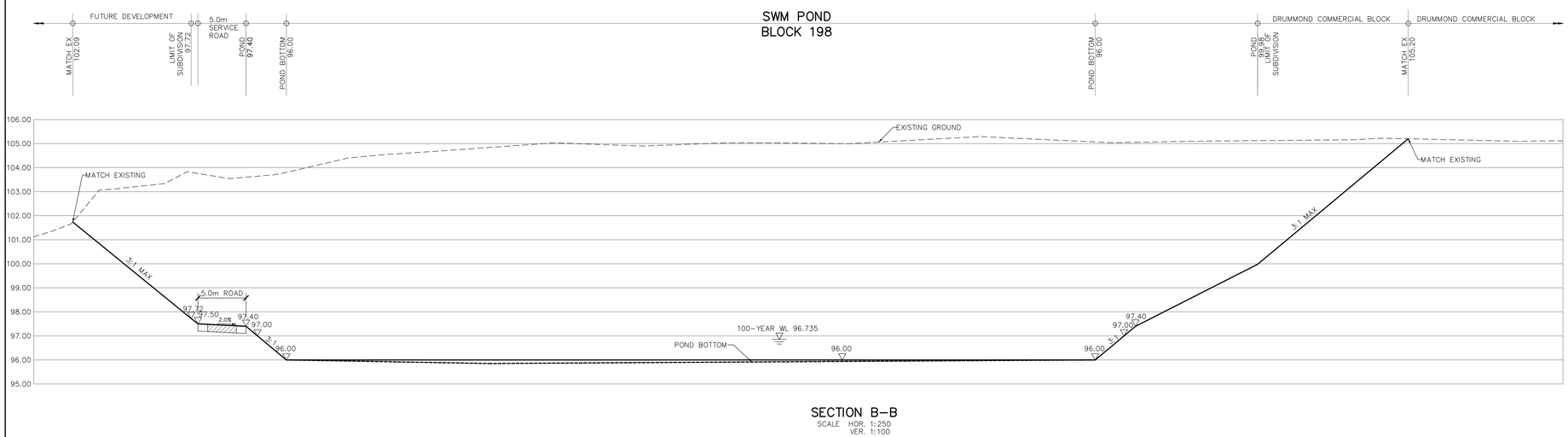

SECTION B–B
SCALE HOR. 1:250
VER. 1:100

NOT FOR CONSTRUCTION

No.	BY	DATE	DESCRIPTION
4	A.D.F.	20-04-24	3RD SUBMISSION
3	A.D.F.	19-12-23	2ND SUBMISSION
2	A.D.F.	19-10-04	1ST SUBMISSION
1	A.D.F.	19-09-19	ISSUED FOR CLIENT REVIEW

TOPOGRAPHIC INFORMATION
JD BARNES LIMITED PROJECT NUMBER 18-10-145-00 SURVEY DATED JULY 26, 2019

LEGAL INFORMATION
CALCULATED M-PLAN PROVIDED BY JD BARNES LTD, PROJECT 18-10-145-00, DATED APRIL 6, 2020

BENCH MARK No. 001196403710
ELEVATIONS SHOWN ON THIS PLAN ARE RELATED TO GEODETIC DATUM AND ARE DERIVED FROM THE MUNICIPALITY BENCHMARK No. 001196403710 HAVING A PUBLISHED ELEVATION OF 91.724 METERS.

CAIVAN COMMUNITIES

THE RIDGE PHASE 1

DSEL
david schaeffer engineering ltd
120 Iber Road Unit 103
Stittsville, Ontario, K2S 1E9
Tel. (613) 836-0856
Fax. (613) 836-7183
www.DSEL.ca

LICENSED PROFESSIONAL ENGINEER
A. D. FOBERT
100396676
2020-04-24
PROVINCE OF ONTARIO

Ottawa CITY OF OTTAWA

SWM POND SECTIONS

© DSEL

DRAWN BY:	G.G.G.	CHECKED BY:	A.D.F.
DESIGNED BY:	C.M.K.	CHECKED BY:	A.D.F.
SCALE:	AS SHOWN		

PROJECT No. 18-1030

SHEET No. 77

CITY PLAN No. XXXXXX

CITY FILE No. D07-16-19-0005

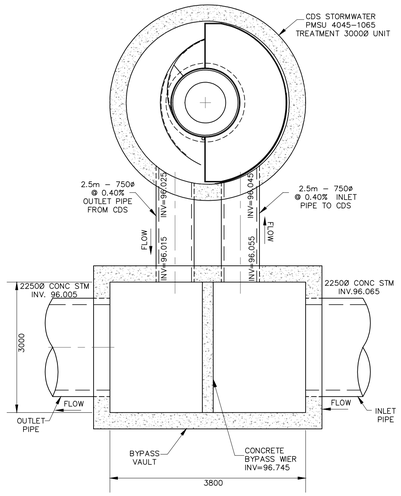

OGS 2 DETAIL
N.T.S

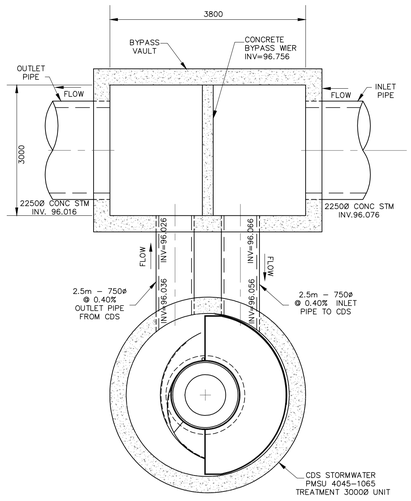

OGS 1 DETAIL
N.T.S

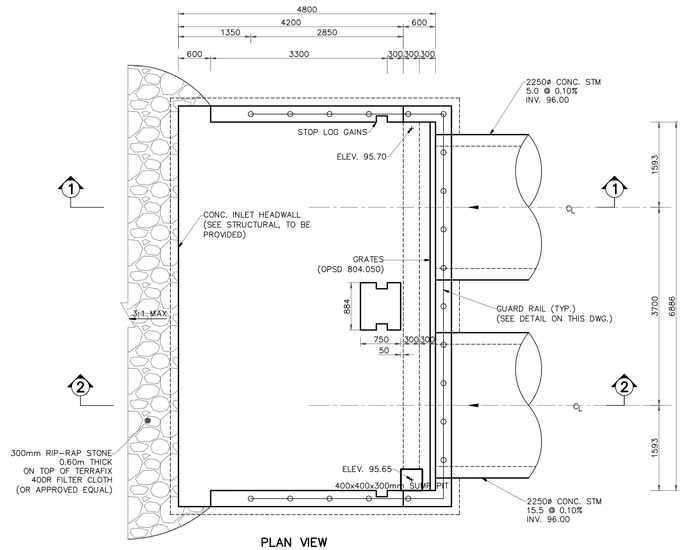

PLAN VIEW
CONC. INLET HEADWALL
(SEE STRUCTURAL DWG., TO BE PROVIDED)
SCALE: N.T.S.

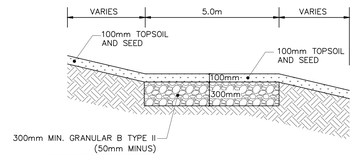

5.0m GRASS REINFORCED SERVICE ROAD
SCALE: N.T.S.

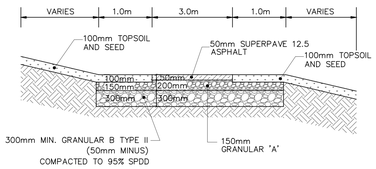

5.0m SERVICE ROAD SECTION
(3.0m ASPHALT PAVEMENT)
SCALE: N.T.S.

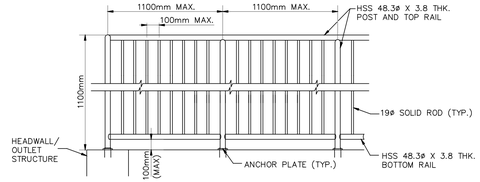

GALVANIZED STEEL RAILING DETAIL
(SEE STRUCTURAL DWG. FOR DETAILS)
SCALE: N.T.S.

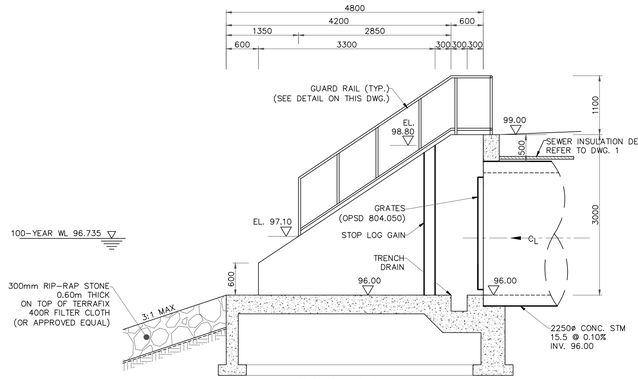

SECTION 2-2
CONC. INLET HEADWALL
(SEE STRUCTURAL DWG. TO BE PROVIDED)
SCALE: N.T.S.

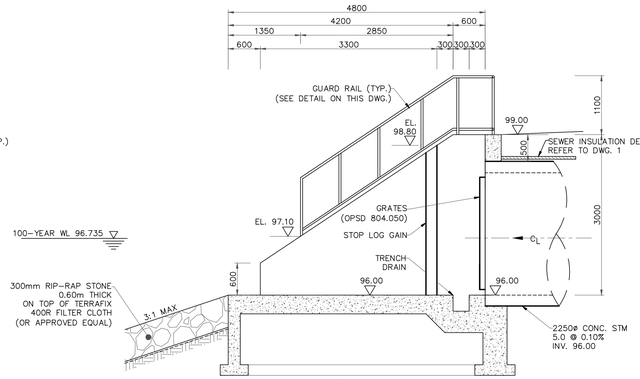

SECTION 1-1
CONC. INLET HEADWALL
(SEE STRUCTURAL DWG. TO BE PROVIDED)
SCALE: N.T.S.

NOT FOR CONSTRUCTION

No.	BY	DATE	DESCRIPTION
4	A.D.F.	20-04-24	3RD SUBMISSION
3	A.D.F.	19-12-23	2ND SUBMISSION
2	A.D.F.	19-10-04	1ST SUBMISSION
1	A.D.F.	19-09-19	ISSUED FOR CLIENT REVIEW

TOPOGRAPHIC INFORMATION
JD BARNES LIMITED PROJECT NUMBER 18-10-145-00 SURVEY DATED JULY 26, 2019

LEGAL INFORMATION
CALCULATED M-PLAN PROVIDED BY JD BARNES LTD, PROJECT 18-10-145-00, DATED APRIL 6, 2020

BENCH MARK No. 001196403710
ELEVATIONS SHOWN ON THIS PLAN ARE RELATED TO GEODETIC DATUM AND ARE DERIVED FROM THE MUNICIPALITY BENCHMARK No. 001196403710 HAVING A PUBLISHED ELEVATION OF 91.724 METERS.

CAIVAN COMMUNITIES

THE RIDGE
PHASE 1

DSEL
david schaeffer engineering ltd
120 Iber Road Unit 103
Stittsville, Ontario, K2S 1E9
Tel. (613) 836-0856
Fax. (613) 836-7183
www.DSEL.ca

LICENSED PROFESSIONAL ENGINEER
A. D. FOBERT
100196476
2020-04-24
PROVINCE OF ONTARIO

Ottawa CITY OF OTTAWA

SWM POND DETAILS

© DSEL

DRAWN BY: G.G.G.	CHECKED BY: A.D.F.	PROJECT No.	
DESIGNED BY: C.M.K.	CHECKED BY: A.D.F.	18-1030	
SCALE: AS SHOWN		SHEET No.	78

CITY FILE No. D07-16-19-0005 CITY PLAN No. XXXXXX

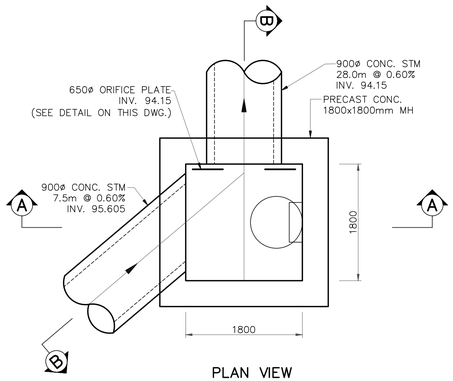

PLAN VIEW
SCALE: N.T.S.

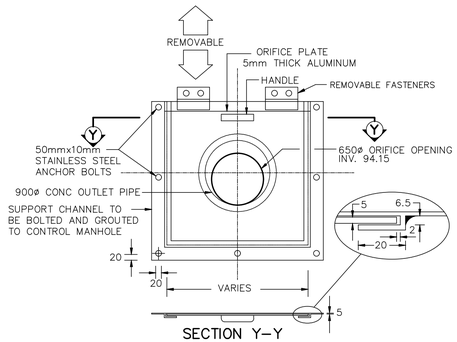

SECTION Y–Y
ORIFICE PLATE DETAIL
SCALE: N.T.S.

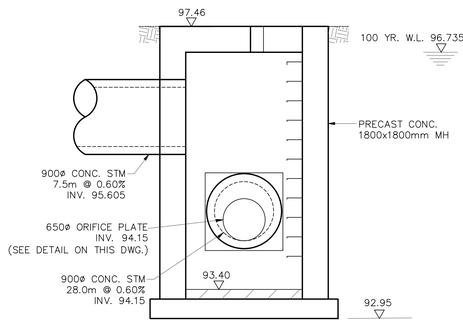

SECTION A–A

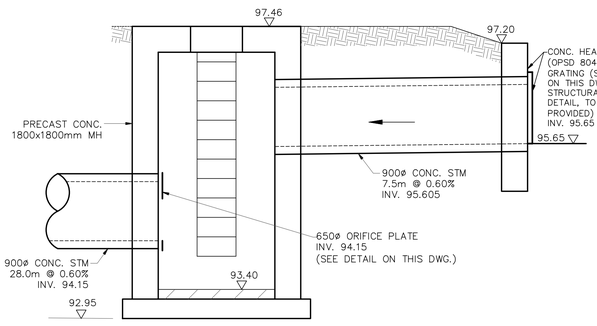

SECTION B–B

OUTLET STRUCTURE DETAIL
(SEE STRUCTURAL DRAWING FOR DETAILS, TO BE PROVIDED)
SCALE N.T.S.

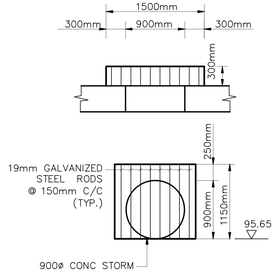

900ø PIPE GRATE ON HEADWALL
(SEE STRUCTURAL DRAWING FOR DETAILS, TO BE PROVIDED)
SCALE N.T.S.

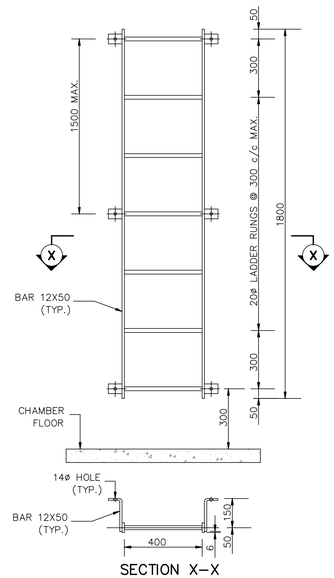

SECTION X–X

ACCESS LADDER DETAIL
(SEE STRUCTURAL DRAWING FOR DETAILS, TO BE PROVIDED)
SCALE: N.T.S.

NOT FOR CONSTRUCTION

No.	BY	DATE	DESCRIPTION
4	A.D.F.	20–04–24	3RD SUBMISSION
3	A.D.F.	19–12–23	2ND SUBMISSION
2	A.D.F.	19–10–04	1ST SUBMISSION
1	A.D.F.	19–09–19	ISSUED FOR CLIENT REVIEW

TOPOGRAPHIC INFORMATION
JD BARNES LIMITED PROJECT NUMBER 18–10–145–00 SURVEY DATED JULY 26, 2019

LEGAL INFORMATION
CALCULATED M–PLAN PROVIDED BY JD BARNES LTD, PROJECT 18–10–145–00, DATED APRIL 6, 2020

BENCH MARK No. 001196403710
ELEVATIONS SHOWN ON THIS PLAN ARE RELATED TO GEODETIC DATUM AND ARE DERIVED FROM THE MUNICIPALITY BENCHMARK No. 001196403710 HAVING A PUBLISHED ELEVATION OF 91.724 METERS.

CAIVAN COMMUNITIES

THE RIDGE
PHASE 1

DSEL
david schaeffer engineering ltd
120 Iber Road Unit 103
Stittsville, Ontario, K2S 1E9
Tel. (613) 836-0856
Fax. (613) 836-7183
www.DSEL.ca

LICENSED PROFESSIONAL ENGINEER
A.D. FOBERT
100396826
2020-04-24
PROVINCE OF ONTARIO

Ottawa CITY OF OTTAWA

SWM POND DETAILS

© DSEL

DRAWN BY: G.G.G.	CHECKED BY: A.D.F.	PROJECT No.	18–1030
DESIGNED BY: C.M.K.	CHECKED BY: A.D.F.	SHEET No.	79
SCALE: AS SHOWN			

CITY PLAN No. XXXXXX
CITY FILE No. D07-16-19-0005

ANY DISTURBED AREA DURING CONSTRUCTION TO BE RESTORED TO THE ORIGINAL CONDITION OR BETTER TO THE SATISFACTION OF THE AUTHORITIES HAVING JURISDICTION

CONTRACTOR TO VERIFY THE PRECISE LOCATIONS AND INVERT ELEVATIONS OF Ex. UNDERGROUND SERVICES AND Ex. UTILITIES PRIOR TO STARTING CONSTRUCTION

NOTE:
ALL EXISTING TREES, SHRUBS ETC. WITHIN LOTS, BLOCKS AND ROADS TO BE REMOVED, UNLESS OTHERWISE NOTED

PERMISSION REQUIRED
FOR WORK ON ADJACENT LANDS

NOTE RE: PROPOSED UNDERGROUND SERVICING IN EXISTING PAVEMENT

PROPOSED UNDERGROUND SERVICING WITHIN EXISTING PAVEMENT TO BE CONSTRUCTED AS PER THE FOLLOWING:
1. PROPOSED UNDERGROUND SERVICES TO BE CONSTRUCTED IN VERTICAL TRENCH AND BACKFILLED WITH UNSHRINKABLE FILL
2. CONTRACTOR TO VERIFY THE PRECISE LOCATIONS AND INVERT ELEVATIONS OF Ex. UNDERGROUND SERVICES AND Ex. UTILITIES PRIOR TO STARTING CONSTRUCTION
3. ANY DISTURBED AREAS, INCLUDING CURB, SIDEWALK AND BOULEVARD, TO BE RESTORED TO THE ORIGINAL CONDITION OR BETTER
4. ALL REMOVED ASPHALT PAVEMENT TO BE DEPOSITED OFF SITE
5. ALL WORKS INCLUDING REMOVAL AND RESTORATION TO THE SATISFACTION OF CITY OF OTTAWA

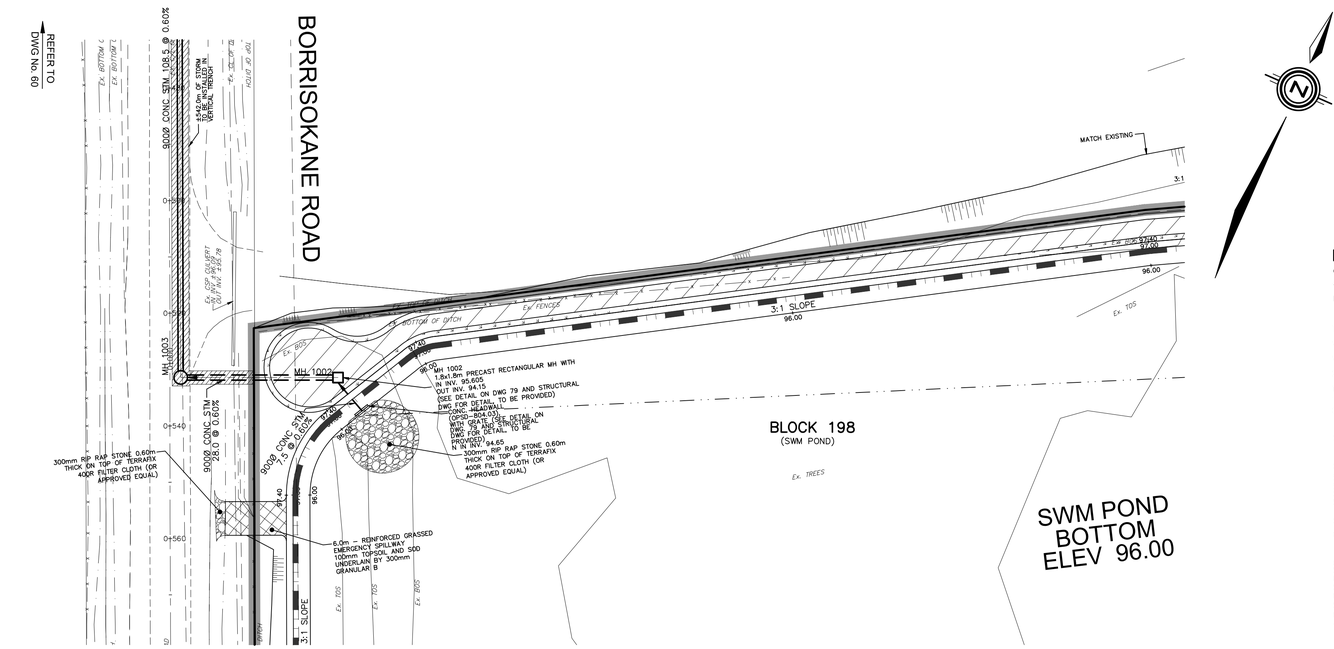

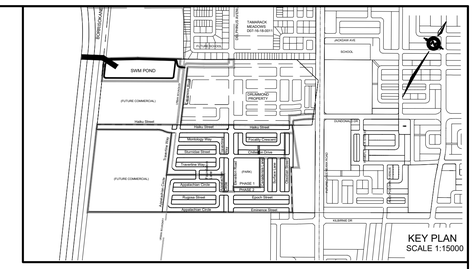

LEGEND

- CROSS
- 45° BEND
- LATERAL
- HYDRANT, VALVE & VB
- TEE
- VALVE & VC
- VALVE & VB
- 22.5° BEND
- 11.25° BEND
- REDUCER
- CAP
- SANITARY MAINTENANCE HOLE
- CAP
- STREET CATCHBASIN & LEAD
- STREET CATCHBASIN WITH CLOSED LID & LEAD
- STORM MAINTENANCE HOLE
- CURB INLET CATCHBASIN & LEAD
- CATCHBASIN/ MAINTENANCE HOLE-INTERCONNECTED CATCH BASIN & LEADS
- CAP
- SINGLE SERVICE LOCATION (ST, SAN & WM)
- SINGLE SERVICE LOCATION (SAN & WM)
- SINGLE SERVICE LOCATION (ST, SAN & WM)
- TEE CATCHBASIN
- PERFORATED PIPE
- ELBOW CATCHBASIN
- DITCH AND CULVERT

- HYDRO TRANSFORMER
- STREET LIGHT STANDARD
- CONCRETE SIDEWALK
- CURB & DEPRESSED CURB
- ASPHALT SIDEWALK
- CHAINLINK FENCE (1.5m UNLESS OTHERWISE NOTED)
- NOISE BARRIER (2.5m UNLESS OTHERWISE NOTED)
- DECORATIVE FENCE (SEE LANDSCAPE DWGS FOR DETAIL)
- CONSTRUCTION FENCE
- POST AND RAIL FENCE
- PHASING LIMITS
- PROPERTY BOUNDARY
- BOREHOLE (BH)
- TEST PIT (TP)
- AUGER HOLE (AH)
- MONITORING WELL LOCATION
- CONCEPTUAL WELL LOCATION
- TOP OF FOUNDATION ELEVATION
- FINISHED FLOOR ELEVATION
- UNDERSIDE OF FOOTING ELEVATION
- NUMBER OF RISERS
- UNITS REQUIRING PRESSURE REDUCING VALVES
- WALKOUT UNITS
- SLAB ON GRADE
- OVERLAND FLOW DIRECTION
- EXTERNAL OVERLAND FLOW DIRECTION
- EMERGENCY OVERLAND FLOW DIRECTION
- TACTILE WALKING SURFACE INDICATOR (AS PER CITY OF OTTAWA STD. SC6, SC7, SC7.1, SC7.2, SC7.3)
- PREVIOUS PHASES
- CLAY SEAL (REFER TO GENERAL NOTES. No. 18. ON DWG. No. 1, AND GEOTECHNICAL CONSULTANT'S SPECIFICATIONS)
- MIN. USF AS PER GEOTECHNICAL CONSULTANT'S RECOMMENDATION

AS PER GEOTECHNICAL REPORT

NOTE RE: SEWER BEDDING
SEWER TRENCH AND BEDDING SHALL BE AS PER CITY OF OTTAWA STD. S6 AND S7, CLASS 'B' BEDDING UNLESS OTHERWISE NOTED.

TOP OF WATERMAIN	
SANITARY INVERT	
STORM INVERT	NW 93.922 SE 93.982 — 900Ø CONC STM 28.0 @ 0.60% 65-D — NW 94.150 SE 95.605 — NW 95.650 — 900Ø CONC STM 7.5 @ 0.60% 65-D
PROPOSED GRADES	98.000 — 97.673 — 95.672 — 95.692
CENTERLINE CHAINAGE	0+020.000 — PI 0+010.000 — PI 0+000.000 — 0+014.888 — 0+020.000 — PI 0+027.428 — 0+040.000 — 0+045.920 — PI 0+052.646 — PI 0+060.000 0+060.646 — PI 0+070.646 — PI 0+080.000 0+080.646 — 0+100.000

TOP OF WATERMAIN
SANITARY INVERT
STORM INVERT
PROPOSED GRADES
CENTERLINE CHAINAGE

NOT FOR CONSTRUCTION

No.	BY	DATE	DESCRIPTION
4	A.D.F.	20-04-24	3RD SUBMISSION
3	A.D.F.	19-12-23	2ND SUBMISSION
2	A.D.F.	19-10-04	1ST SUBMISSION
1	A.D.F.	19-09-19	ISSUED FOR CLIENT REVIEW

TOPOGRAPHIC INFORMATION
JD BARNES LIMITED PROJECT NUMBER 18-10-145-00 SURVEY DATED JULY 26, 2019

LEGAL INFORMATION
CALCULATED M-PLAN PROVIDED BY JD BARNES LTD, PROJECT 18-10-145-00, DATED APRIL 6, 2020

BENCH MARK No. 001196403710
ELEVATIONS SHOWN ON THIS PLAN ARE RELATED TO GEODETIC DATUM AND ARE DERIVED FROM THE MUNICIPALITY BENCHMARK No. 001196403710 HAVING A PUBLISHED ELEVATION OF 91.724 METERS.

CAIVAN COMMUNITIES

THE RIDGE PHASE 1

DSEL
david schaeffer engineering ltd
120 Iber Road Unit 103
Stittsville, Ontario, K2S 1E9
Tel. (613) 836-0856
Fax. (613) 836-7183
www.DSEL.ca

LICENSED PROFESSIONAL ENGINEER — A. D. FOUGHT — 100396626 — 2020-04-24 — PROVINCE OF ONTARIO

Ottawa CITY OF OTTAWA

PLAN AND PROFILE OF

© DSEL

Pond Outlet

(STA. 0+000.000 TO STA.0+080.046)

DRAWN BY: G.G.G.	CHECKED BY: A.D.F.	PROJECT No.	18-1030
DESIGNED BY: C.M.K.	CHECKED BY: A.D.F.	SHEET No.	57

SCALE:
VERT. 1:50 — 0 0.5 1.0 1.5 2.0
HORZ. 1:500 — 0 5 10 15 20

CITY FILE No. D07-16-19-0005 CITY PLAN No. XXXXX

PAVEMENT DESIGN

40mm SUPERPAVE 12.5 ASPHALT CONCRETE
50mm SUPERPAVE 19.0 ASPHALT CONCRETE
150mm GRANULAR "A" CRUSH STONE
400mm GRANULAR "B" TYPE II

ANY DISTURBED AREA DURING CONSTRUCTION TO BE RESTORED TO THE ORIGINAL CONDITION OR BETTER TO THE SATISFACTION OF THE AUTHORITIES HAVING JURISDICTION

CONTRACTOR TO VERIFY THE PRECISE LOCATIONS AND INVERT ELEVATIONS OF Ex. UNDERGROUND SERVICES AND Ex. UTILITIES PRIOR TO STARTING CONSTRUCTION

NOTE:
ALL EXISTING TREES, SHRUBS ETC. WITHIN LOTS, BLOCKS AND ROADS TO BE REMOVED, UNLESS OTHERWISE NOTED

PERMISSION REQUIRED FOR WORK ON ADJACENT LANDS

NOTE RE: PROPOSED UNDERGROUND SERVICING IN EXISTING PAVEMENT

PROPOSED UNDERGROUND SERVICING WITHIN EXISTING PAVEMENT TO BE CONSTRUCTED AS PER THE FOLLOWING:
1. PROPOSED UNDERGROUND SERVICES TO BE CONSTRUCTED IN VERTICAL TRENCH AND BACKFILLED WITH UNSHRINKABLE FILL
2. CONTRACTOR TO VERIFY THE PRECISE LOCATIONS AND INVERT ELEVATIONS OF Ex. UNDERGROUND SERVICES AND Ex. UTILITIES PRIOR TO STARTING CONSTRUCTION
3. ANY DISTURBED AREAS, INCLUDING CURB, SIDEWALK AND BOULEVARD, TO BE RESTORED TO THE ORIGINAL CONDITION OR BETTER
4. ALL REMOVED ASPHALT PAVEMENT TO BE DEPOSITED OFF SITE
5. ALL WORKS INCLUDING REMOVAL AND RESTORATION TO THE SATISFACTION OF CITY OF OTTAWA

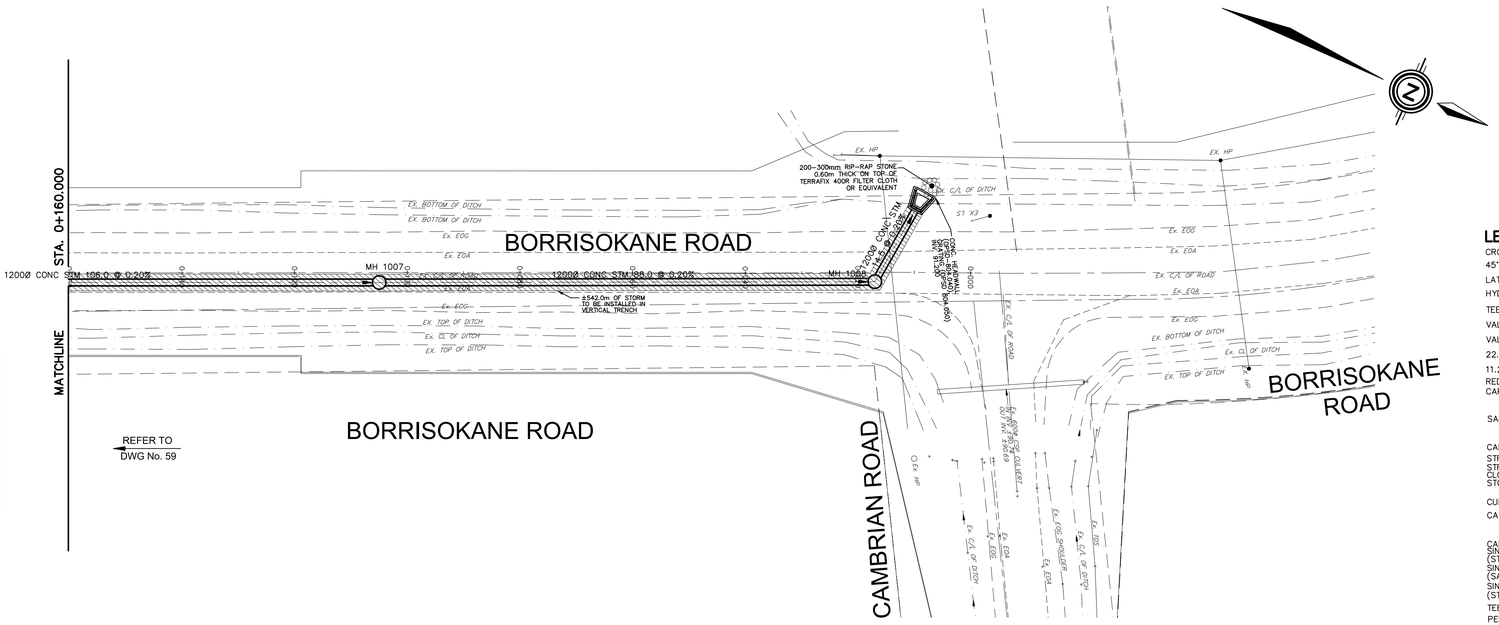

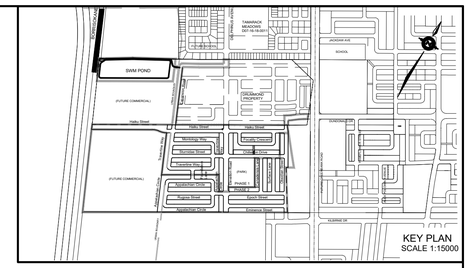
SWM POND
(FUTURE COMMERCIAL)
(FUTURE COMMERCIAL)
(FUTURE RESIDENTIAL)
(FUTURE RESIDENTIAL)
(FUTURE RESIDENT

PAVEMENT DESIGN

40mm SUPERPAVE 12.5 ASPHALT CONCRETE
50mm SUPERPAVE 19.0 ASPHALT CONCRETE
150mm GRANULAR "A" CRUSH STONE
400mm GRANULAR "B" TYPE II

ANY DISTURBED AREA DURING CONSTRUCTION TO BE RESTORED TO THE ORIGINAL CONDITION OR BETTER TO THE SATISFACTION OF THE AUTHORITIES HAVING JURISDICTION

CONTRACTOR TO VERIFY THE PRECISE LOCATIONS AND INVERT ELEVATIONS OF Ex. UNDERGROUND SERVICES AND Ex. UTILITIES PRIOR TO STARTING CONSTRUCTION

NOTE:
ALL EXISTING TREES, SHRUBS ETC. WITHIN LOTS, BLOCKS AND ROADS TO BE REMOVED, UNLESS OTHERWISE NOTED

PERMISSION REQUIRED FOR WORK ON ADJACENT LANDS

NOTE RE: PROPOSED UNDERGROUND SERVICING IN EXISTING PAVEMENT

PROPOSED UNDERGROUND SERVICING WITHIN EXISTING PAVEMENT TO BE CONSTRUCTED AS PER THE FOLLOWING:
1. PROPOSED UNDERGROUND SERVICES TO BE CONSTRUCTED IN VERTICAL TRENCH AND BACKFILLED WITH UNSHRINKABLE FILL
2. CONTRACTOR TO VERIFY THE PRECISE LOCATIONS AND INVERT ELEVATIONS OF Ex. UNDERGROUND SERVICES AND Ex. UTILITIES PRIOR TO STARTING CONSTRUCTION
3. ANY DISTURBED AREAS, INCLUDING CURB, SIDEWALK AND BOULEVARD, TO BE RESTORED TO THE ORIGINAL CONDITION OR BETTER
4. ALL REMOVED ASPHALT PAVEMENT TO BE DEPOSITED OFF SITE
5. ALL WORKS INCLUDING REMOVAL AND RESTORATION TO THE SATISFACTION OF CITY OF OTTAWA

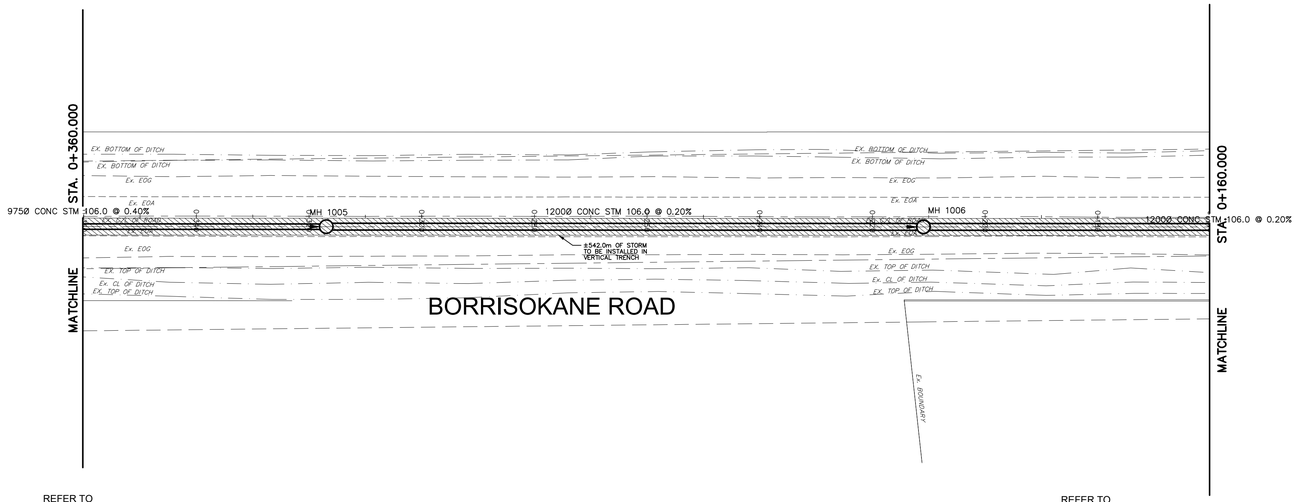

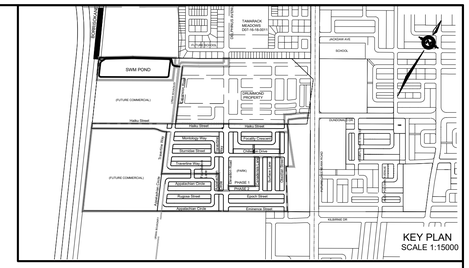

LEGEND

CROSS
45° BEND
LATERAL
HYDRANT, VALVE & VB
TEE
VALVE & VC
VALVE & VB
22.5° BEND
11.25° BEND
REDUCER
CAP
SANITARY MAINTENANCE HOLE
CAP
STREET CATCHBASIN & LEAD
STREET CATCHBASIN WITH CLOSED LID & LEAD
STORM MAINTENANCE HOLE
CURB INLET CATCHBASIN & LEAD
CATCHBASIN/ MAINTENANCE HOLE INTERCONNECTED CATCH BASIN & LEADS
CAP
SINGLE SERVICE LOCATION (ST, SAN & WM)
SINGLE SERVICE LOCATION (SAN & WM)
SINGLE SERVICE LOCATION (ST, SAN & WM)
TEE CATCHBASIN
PERFORATED PIPE
ELBOW CATCHBASIN
DITCH AND CULVERT

HYDRO TRANSFORMER
STREET LIGHT STANDARD
CONCRETE SIDEWALK
CURB & DEPRESSED CURB
ASPHALT SIDEWALK
CHAINLINK FENCE (1.5m UNLESS OTHERWISE NOTED)
NOISE BARRIER (2.5m UNLESS OTHERWISE NOTED)
DECORATIVE FENCE (SEE LANDSCAPE DWGS FOR DETAIL)
CONSTRUCTION FENCE
POST AND RAIL FENCE
PHASING LIMITS
PROPERTY BOUNDARY
BOREHOLE (BH)
TEST PIT (TP)
AUGER HOLE (AH)
MONITORING WELL LOCATION
CONCEPTUAL WELL LOCATION
AS PER GEOTECHNICAL REPORT
TOP OF FOUNDATION ELEVATION
FINISHED FLOOR ELEVATION
UNDERSIDE OF FOOTING ELEVATION
NUMBER OF RISERS
UNITS REQUIRING PRESSURE REDUCING VALVES
WALKOUT UNITS
SLAB ON GRADE
OVERLAND FLOW DIRECTION
EXTERNAL OVERLAND FLOW DIRECTION
EMERGENCY OVERLAND FLOW DIRECTION
TACTILE WALKING SURFACE INDICATOR (AS PER CITY OF OTTAWA STD. SC6, SC7, SC7.1, SC7.2, SC7.3)
PREVIOUS PHASES
CLAY SEAL (REFER TO GENERAL NOTES. No. 18. ON DWG. No. 1, AND GEOTECHNICAL CONSULTANT'S SPECIFICATIONS)
MIN. USF AS PER GEOTECHNICAL CONSULTANT'S RECOMMENDATION

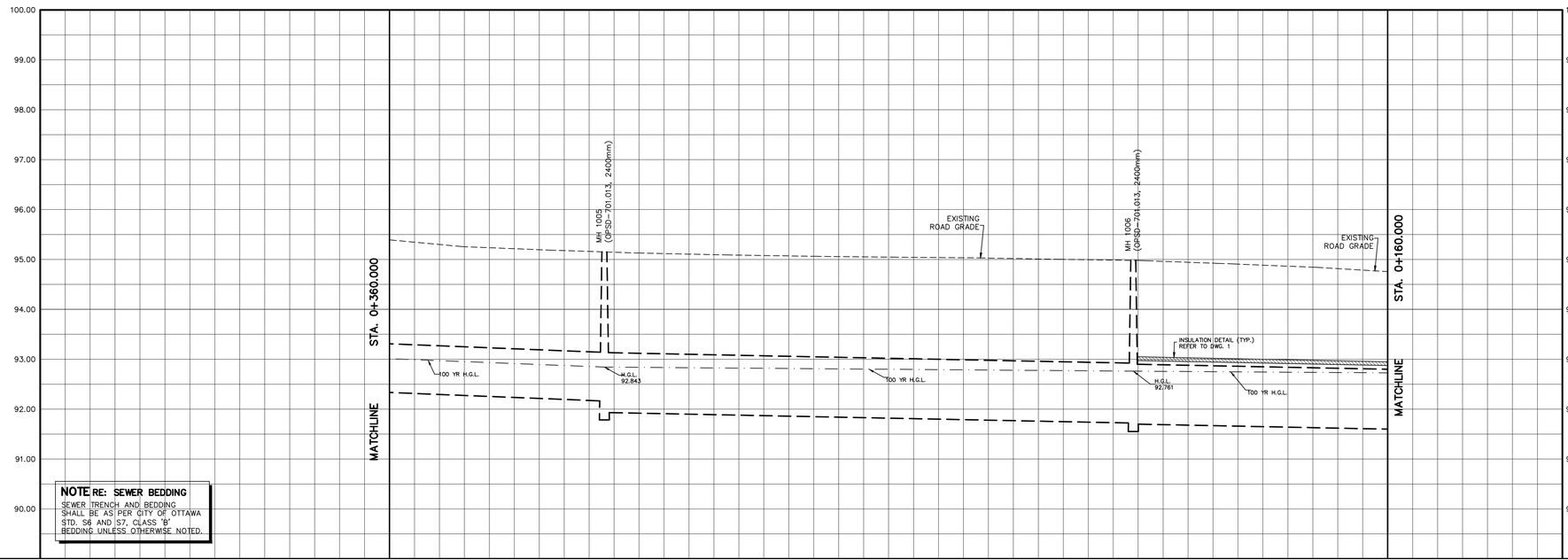

NOTE RE: SEWER BEDDING
SEWER TRENCH AND BEDDING SHALL BE AS PER CITY OF OTTAWA STD. S6 AND S7, CLASS 'B' BEDDING UNLESS OTHERWISE NOTED.

| | | |

PAVEMENT DESIGN

40mm SUPERPAVE 12.5 ASPHALT CONCRETE
50mm SUPERPAVE 19.0 ASPHALT CONCRETE
150mm GRANULAR "A" CRUSH STONE
400mm GRANULAR "B" TYPE II

ANY DISTURBED AREA DURING CONSTRUCTION TO BE RESTORED TO THE ORIGINAL CONDITION OR BETTER TO THE SATISFACTION OF THE AUTHORITIES HAVING JURISDICTION

CONTRACTOR TO VERIFY THE PRECISE LOCATIONS AND INVERT ELEVATIONS OF Ex. UNDERGROUND SERVICES AND Ex. UTILITIES PRIOR TO STARTING CONSTRUCTION

NOTE:
ALL EXISTING TREES, SHRUBS ETC. WITHIN LOTS, BLOCKS AND ROADS TO BE REMOVED, UNLESS OTHERWISE NOTED

PERMISSION REQUIRED FOR WORK ON ADJACENT LANDS

NOTE RE: PROPOSED UNDERGROUND SERVICING IN EXISTING PAVEMENT

PROPOSED UNDERGROUND SERVICING WITHIN EXISTING PAVEMENT TO BE CONSTRUCTED AS PER THE FOLLOWING:
1. PROPOSED UNDERGROUND SERVICES TO BE CONSTRUCTED IN VERTICAL TRENCH AND BACKFILLED WITH UNSHRINKABLE FILL
2. CONTRACTOR TO VERIFY THE PRECISE LOCATIONS AND INVERT ELEVATIONS OF Ex. UNDERGROUND SERVICES AND Ex. UTILITIES PRIOR TO STARTING CONSTRUCTION
3. ANY DISTURBED AREAS, INCLUDING CURB, SIDEWALK AND BOULEVARD, TO BE RESTORED TO THE ORIGINAL CONDITION OR BETTER
4. ALL REMOVED ASPHALT PAVEMENT TO BE DEPOSITED OFF SITE
5. ALL WORKS INCLUDING REMOVAL AND RESTORATION TO THE SATISFACTION OF CITY OF OTTAWA

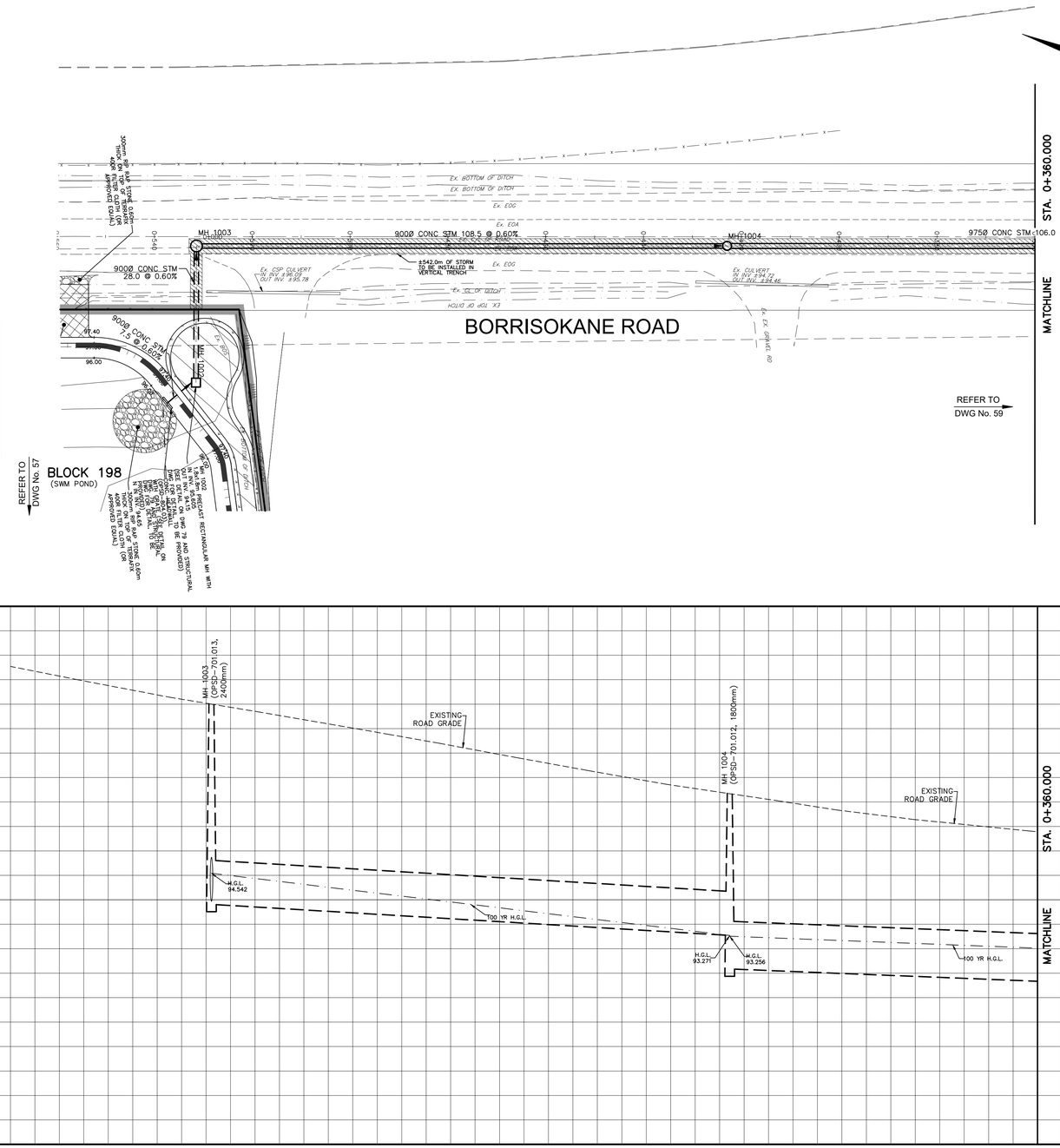
STA. 0+360.000
MATCHLINE
BORRISOKANE ROAD
MH 1003
MH 1004
900Ø CONC STM 108.5 @ 0.60%
975Ø CONC STM 106.0 @ 0.40%
900Ø CONC STM 28.0 @ 0.60%
900Ø CONC STM 73.0 @ 0.60%
Ex. BOTTOM OF DITCH
Ex. EOG
Ex. EOA
Ex. CSP CULVERT IN INV. 96.28 OUT INV. 95.78
Ex. CULVERT IN INV. 94.72 OUT INV. 94.46
±542.0m OF STORM TO BE INSTALLED IN VERTICAL TRENCH
Ex. CL OF DITCH
Ex. TOP OF DITCH
Ex. EOP
Ex. CORNET RD
REFER TO DWG No. 59
REFER TO DWG No. 57
BLOCK 198
(SWM POND)
JACKING PIT 2.4m x 4.0m
RECEIVING PIT 2.4m x 4.0m
JACKED 1800mm RCP
1800mm RCP
1800mm RCP STORM MH
1200mm DIA. MONITORING WELL
1200mm DIA. MONITORING WELL (FOR APPROVED EQUAL)
1200mm DIA. MONITORING WELL (FOR APPROVED EQUAL) WITH FILTER CLOTH
1200mm DIA. MONITORING WELL (FOR APPROVED EQUAL) WITH FILTER CLOTH AND 0.6m CLEAR STONE
1800mm DIA. PRECAST RECTANGULAR MH WITH 1.2m SUMP
1800mm DIA. PRECAST RECTANGULAR MH WITH 1.2m SUMP AND 0.6m CLEAR STONE
SEE STRUCTURAL DWG FOR DETAILS
SEE STRUCTURAL DWG FOR DETAILS (DETAILS TO BE PROVIDED)

5.8 Analysis of EES Results

5.8.1 BSUEA Site Wide Infiltration with EES

A water budget analysis was carried out as part of the Existing Condition Report (Section B6, Appendix B). This analysis revealed that pre-development infiltration across the BSUEA accounted for 40% of the total precipitation based on long-term simulations. Based on the post-development simulation results, the water budget for the overall BSUEA lands is shown in Table 5-8 below and compared in the table with the existing conditions water budget. The use of the EES along the local road network within the BSUEA lands achieves an infiltration of 44% which is greater than under existing conditions, which shows that infiltration within ±10% of existing is achievable. It should be noted that this analysis has excluded the Brazeau and Drummond properties which have been assumed to integrate measures to promote infiltration and preserve pre-infiltration rates along both properties separately from the remaining BSUEA. Further refinements to the high level infiltration concept, including sizing of the EES, can be investigated during detailed design.

Table 5-8: BSUEA EES Water Budget Results

Water Budget Component	Annual Average Depth (mm)	Budget (%)	Existing Condition Budget (%)
Precipitation	844	100%	100%
Evapotranspiration	231	27%	60%
Infiltration	377	44%	40%
Surface Runoff	225	27%	0%

5.8.2 Minto Lands

5.8.2.1 Major System Cascading and Ponding Levels

The simulated elevations along the major overland system nodes are shown in Table 5-9 and Table 5-10. There is no ponding during the 1:5 year event or 1:10 year event for local/collector roads and arterial roads, while the depth of flow along the major system is maintained to or below 350 mm during the 1:100 year event.

Table 5-9: Minto EES Local and Collector Road Major Node Depths

Major System Node	3 hr Chi 1:5 yr Ponding Depth (mm)	24 hr SCS 1:5 yr Ponding Depth (mm)	3 hr Chi 1:100 yr Ponding Depth (mm)	24 hr SCS 1:100 yr Ponding Depth (mm)
S_110-111	10	10	350	210
S_111-112	10	10	250	30
S_150-152	10	10	210	160
S_152-154	10	10	80	70

5.4.3 Stormwater Management Facilities (SWMFs)

The SWMFs, either wet ponds or dry ponds, should be designed in accordance with Section 8 of the OSDG and MOE's publication entitled "SWM Planning and Design Manual, 2003".

The normal water level in the wet ponds should be above the highest elevation of either: (i) the free flowing water level in the downstream storm sewer during the 1:2 year event; or (ii) the elevation of the underlying groundwater table.

For safety reasons, the live storage in dry ponds should be kept to 1.5 m (OSDG) to 2.0 m deep (MOE). A minimum 300 mm freeboard should be provided between the 1:100 year water surface elevation and the overflow elevation.

SWMFs should be integrated into the community through the use of pathways or other linkages.

5.4.4 Water Balance

The Hydrogeological Existing Conditions Report (Paterson Group Inc., 2017) recommended that infiltration measures be incorporated into the BSUEA's storm servicing design, as the subject area contributes to groundwater recharge of the esker, which should be preserved. The Paterson Group Inc. (Paterson) Report recommended that:

- Distributed infiltration be achieved to promote recharge of overburden aquifer and preserve the pre-infiltration condition for the three (3) subwatersheds; and,
- Only captured runoff that is relatively free of roadway salts be infiltrated to minimize adverse impacts on the esker.

An analysis (using the PCSWMM software platform) was carried out and is summarized in the Existing Condition Report (Appendix B) to determine the various contributions of the water budget based on long-term simulations. To simulate the infiltration, the analysis utilized measured data compiled as part of Paterson's field program. Infiltration to groundwater recharge zones was simulated based on measured saturated field hydraulic conductivity, which was translated to infiltration rates (refer to Section B6.1.1 of Appendix B). The analysis revealed that overall pre-development infiltration from the subject site (excluding the aggregate extraction areas) accounted for 40% of the overall water budget (Figure 5-2). The City and RVCA have agreed with Paterson's recommendation that pre-development infiltration levels should be maintained and distributed infiltration be achieved across the site, and should not be concentrated at one or two location(s).

Figure 5-2: Existing Water Budget Breakdown

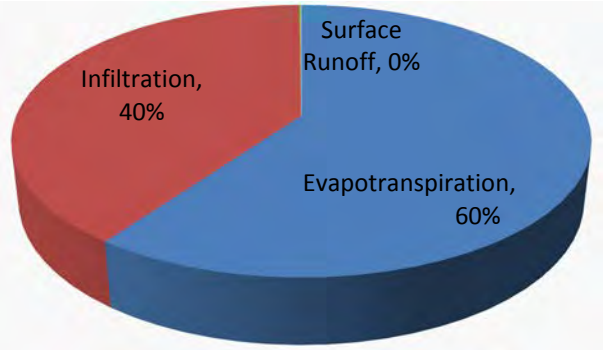

5.5 Storm Servicing Strategy

Based on the storm drainage connections and criteria set out in Sections 5.2 and 5.4 respectively, a stormwater management strategy has been developed. The strategy strives to preserve pre-development infiltration across the BSUEA, which in turn, impacts the individual stormwater management strategies developed for each of the servicing areas depicted in Figure 4-2. Sub-section 5.4 presents the rationale in developing storm servicing strategies, Sub-section 5.5.5 the storm drainage and design methodology, Sub-sections 5.7 5.8, and 5.9 present the analyses carried out for the conventional, EES and infiltration gallery servicing strategies, respectively while Sub-section 5.10.2 summarizes the impact of the strategies on the municipal drains.

5.5.1 EES Infiltration Strategy

5.5.1.1 Background

During the preparation of the Existing Condition Report, it became evident that storm servicing for the BSUEA would need to incorporate measures to recharge the overburden aquifer. As a result of extensive work and consultation with the both the City and RVCA over a nine (9) month period, the preferred infiltration servicing strategy has been identified as the Etobicoke Exfiltration System (EES). During this nine (9) month period, a number of Memoranda were prepared to support the selection process. All documents and work undertaken (Memoranda and Presentation) are described below (Sections 5.5.1.1 to 5.5.1.6) and included in Appendix E.

In September 2016, a Memorandum to the City outlined potential infiltration measures that could be considered for the BSUEA. The Memorandum outlined general considerations related to infiltration and nine (9) specific infiltration measures, which ranged from reduced lot grading to infiltration galleries and bio-retention cells. The advice from the City and RVCA following submission of the Memorandum is that infiltration measures should be spread across the site so as to mimic current infiltration patterns and should not rely on infrastructure on private properties. After further review and discussions, the EES was selected as the preferred measure to preserve the water budget and carried forward for further sizing and analysis.

Table 5-13: Minto EES Pond Parameters and Results

Pond Parameter	Dry Pond 1	Dry Pond 2	Western Spill-over Pond
Water Quality	Not Required	Not Required	Not Required
Simulated Release Rate (m^3/s)	1.7	0.5	0.33
Pond Invert (m)	95	95.6	100
Pond Top of Bank (m)	95.75	96.8	100.7
Active Storage Depth (m)	0.75	1.2	1.1
Freeboard (m)	>0.3	>0.3	>0.3
Outlet Elevation (m)	95	95.6	100
Outlet Diameter (m)	0.675	0.375	0.4
Drawdown Time (hrs)	6	12	6
Surface Area (ha)	1.5	1.7	1.2

5.8.3 Mattamy Lands East and Mattamy Lands West

The Mattamy Lands East was modelled at the conceptual level as part of the Half Moon Bay South – Phase 4 Stormwater Management Report (Stantec, 2015) while the minor system of Mattamy Lands West was included in the Draft BSMSSA, Stantec, 2014. Neither of these Reports included an assessment of EES within the storm minor system.

Including the EES within these areas would not alter the stormwater management approach as neither of the Mattamy Lands requires additional water quality control and the MSS designs do not affect major system storage requirements. The use of EES in Mattamy Lands East, however, may improve the downstream HGLs in the Half Moon Bay South subdivision and areas draining to the Todd Pond as exfiltration of clean runoff into the underlying groundwater and esker would be promoted resulting in a reduction in the flow and increase in available capacity in the conventional sewers.

5.8.4 Brazeau and Drummond Aggregate Extraction Areas

The EES has been identified as a suitable strategy on urban development in the BSUEA to achieve distributed infiltration as per the recommendations of Paterson's Existing Conditions Report. Assuming that both aggregate extraction areas are developed as residential, infiltrating clean runoff from local roads can achieve the required infiltration. Alternatively, infiltration galleries could also supplement or replace part of an EES. At detailed design of these properties, the strategy to preserve pre-development infiltration rates will need to be reviewed in consultation with the Geotechnical Engineer once it is known what type of fill material was used to meet the minimum rehabilitation elevations.

APPROVED ☐ REFUSED ☐

THIS ____ DAY OF _____, 20____

JEFF SHILLINGTON, P.ENG
PROJECT MANAGER – SOUTH BRANCH
PLANNING, INFRASTRUCTURE & ECONOMIC
DEVELOPMENT DEPARTMENT, CITY OF OTTAWA

OPEN SPACE

BORRISOKANE ROAD

PHASE 3

PHASE 4

PHASE 2

PHASE 1

EMPLOYMENT

WOODLOT

PROTECTED WOODLOT

PARK

CLARKE SWM POND

GREENBANK SWM POND

TODD SWM POND

ELEMENTARY SCHOOL

SECONDARY SCHOOL

APT.

COMM.

COMMERCIAL

CHANNEL

JOCK RIVER

chemin Greenbank Road

CAMBRIAN ROAD

WEST STM TRUNK

EAST STM TRUNK

2.78AC=0.04	TC = 18.90 MIN	
C= 0.40 (PARK)	5YR	

2.78AC=4.94	TC = 18.90 MIN	
C= 0.75	5YR	

2.78AC=7.71	TC = 18.90 MIN	
C= 0.73	2YR	

2.78AC=11.66	TC = 17.55 MIN	
C= 0.68	2YR	

2.78AC=1.76	TC = 17.55 MIN	
C= 0.68	5YR	

2.78AC=3.25	TC = 16.38 MIN	
C= 0.65	2YR	

2.78AC=3.07	TC = 16.38 MIN	
C= 0.65	5YR	

2.78AC=4.44	TC = 13.58 MIN	
C= 0.70	2YR	

2.78AC=1.83	TC = 12.66 MIN	
C= 0.65	2YR	

2.78AC=1.04	TC = 10.00 MIN	
C= 0.69	2YR	

2.78AC=3.02	TC = 10.00 MIN	
C= 0.80	5YR	

2.78AC=0.94	TC = 11.78 MIN	
C= 0.72	2YR	

2.78AC=3.35	TC = 11.78 MIN	
C= 0.40 (PARK)	5YR	

2.78AC=1.80	TC = 13.48 MIN	
C= 0.85	10YR	

2.78AC=3.34	TC = 10.00 MIN	
C= 0.80	5YR	

2.78AC=24.90	TC = 21.50 MIN	
C= 0.64	5YR	

2.78AC=18.79	TC = 21.50 MIN	
C= 0.55	100YR	

2.78AC=69.99	TC = 14.07 MIN	
C= 0.65	5YR	

MINOR FLOW ONLY TO CLARKE POND
MAJOR FLOW TO BORRISOKANE ROAD VIA CAMBRIAN ROAD DITCH

AREA PROPOSED TO BE TRIBUTARY TO THE CLARKE POND FROM THE DRUMMOND LANDS (i.e. LESS THAN THE REDIRECTED AREA SHOWN)

AREA THAT WAS FORMERLY TRIBUTARY TO THE CLARKE POND NOW DIRECTED TO THE DRUMMOND/BRAZEAU SWM POND

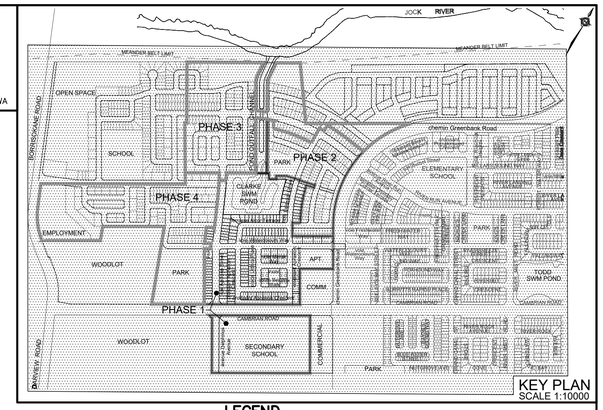

LEGEND

STORM DRAINAGE BOUNDARY
SUB-DRAINAGE BOUNDARY
STORM DRAINAGE BOUNDARY (OTHER PHASES)
STORM FREQUENCY → 2YR
UPSTREAM MH TO DOWNSTREAM MH → 43 - 44
AREA IN HECTARES → 0.37 | 0.51
RUNOFF COEFFICIENT
EXTERNAL 2.78AC = → 2.78AC=14.40
EXTERNAL TIME OF CONCENTRATION → TC=14.5 MIN
EXTERNAL BLENDED RUNOFF COEFFICIENT → C= 0.70 | 2YR
EXTERNAL STORM FREQUENCY
UPSTREAM MH TO DOWNSTREAM MH → 21-23
AREA IN OTHER PHASES IN HECTARES → 0.28 | 0.78
RUNOFF COEFFICIENT
STREET CATCHBASIN & LEAD
STREET CATCHBASIN WITH CLOSED LID & LEAD MAINTENANCE HOLE → MH202
CURB INLET CATCHBASIN & LEAD
CATCHBASIN/ MAINTENANCE HOLE → CBMH201
INTERCONNECTED CATCH BASIN & LEADS
CAP
OVERLAND FLOW DIRECTION
EXTERNAL OVERLAND FLOW DIRECTION
EMERGENCY OVERLAND FLOW DIRECTION

TOPOGRAPHIC INFORMATION

TOPOGRAPHIC INFORMATION PROVIDED BY J.D. BARNES LIMITED, PROJECT No. 16-10-100-00. SURVEY DATED FEBRUARY 22, 2017. CITY OF OTTAWA 2K MAPPING, RECEIVED ON JANUARY 18, 2016.

LEGAL INFORMATION

CALCULATED DRAFT PLAN PROVIDED BY J.D. BARNES LIMITED, PROJECT No. 16-10-100-00-ph1 (HALF MOON BAY WEST PHASE 1), RECEIVED ON DECEMBER 04, 2018.

5th SUBMISSION 19-01-29

BENCH MARK No. 00820010126

POINT IS LOCATED 1.65km NORTH OF BARNSDALE ROAD AND 5km SOUTH OF FALLOWFIELD ROAD ON HIGHWAY 416 NORTH OF KEMPTVILLE. THE POINT IS SET EAST OF THE NORTHBOUND LANE IN THE GRASSY SHOULDER.
ELEVATION = 96.923 m

No.	BY	DATE	DESCRIPTION	BY
6	W.L.	19-01-29	5th SUBMISSION	
5	W.L.	18-10-29	4th SUBMISSION	
4	W.L.	18-10-19	ISSUED FOR REVIEW	
3	W.L.	18-09-05	3rd SUBMISSION	
2	W.L.	18-07-13	2nd SUBMISSION	
1	W.L.	18-03-09	1st SUBMISSION	

CITY OF OTTAWA

PROJECT No. 16-888

LICENSED PROFESSIONAL ENGINEER W. LIU 100167932 19-01-29 PROVINCE OF ONTARIO

© DSEL

EXTERNAL POST-DEVELOPMENT STORM DRAINAGE PLAN

MATTAMY (HALF MOON BAY) LIMITED

HALF MOON BAY WEST SUBDIVISION
PHASE 1

DSEL
david schaeffer engineering ltd
120 Iber Road, Unit 103
Stittsville, ON K2S 1E9
Tel. (613) 836-0856
Fax. (613) 836-7183
www.DSEL.ca

DRAWN BY: V.W./S.L.	CHECKED BY: P.P./C.M.	DRAWING NO.	SHEET NO.
DESIGNED BY: W.L./C.M.	CHECKED BY: K.M.		42
SCALE: 1:4000	DATE: MARCH 2018		

CITY FILE No. D07-16-16-0023 P1 CITY PLAN No. 17586

APPENDIX E

GRADING

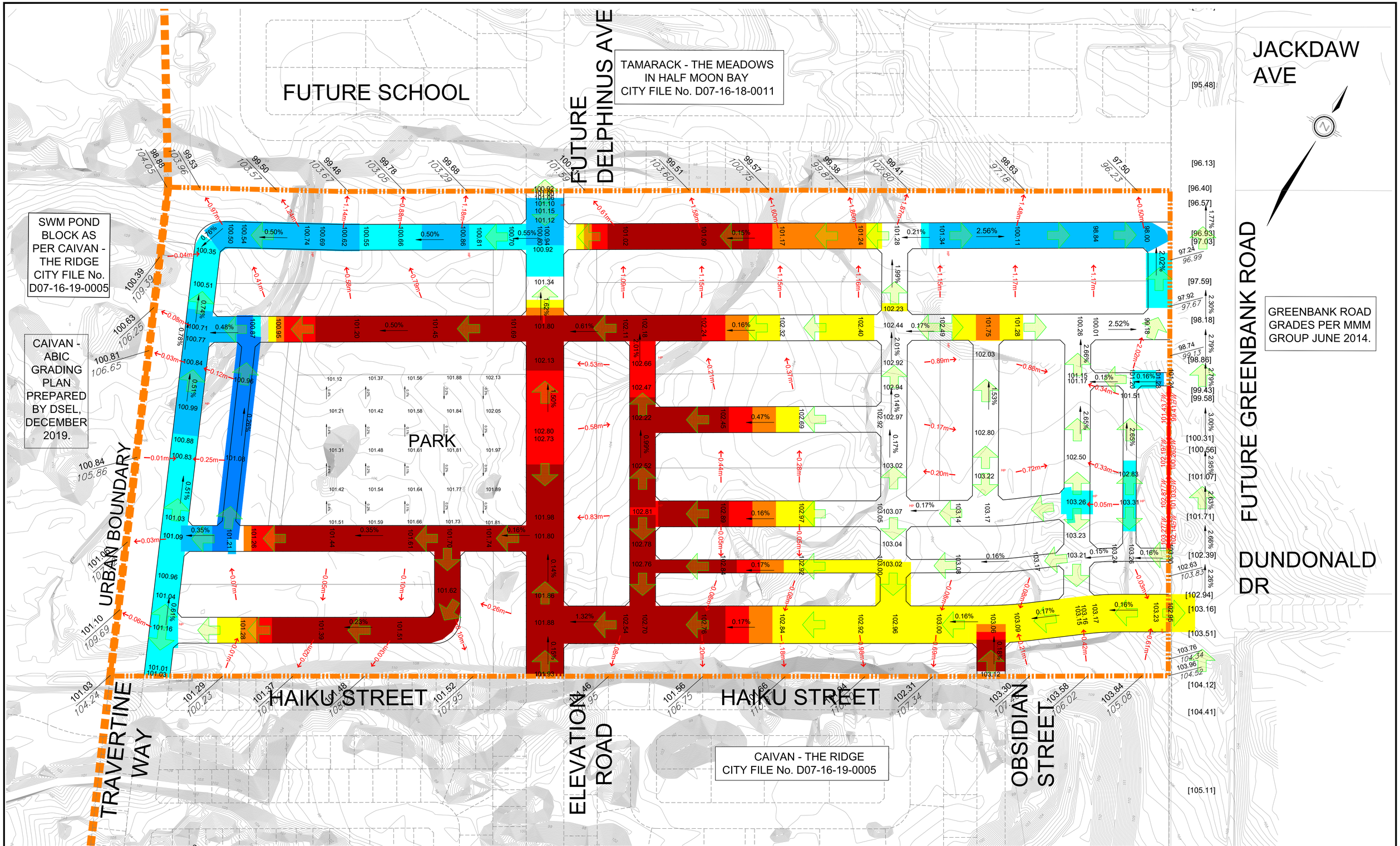

LEGEND

- SUBJECT LANDS
- STORM OVERLAND FLOW ARROW
- 192.85 PROPOSED CENTERLINE ELEVATION
- 193.50 / 193.50 PROPOSED ELEVATION / EXISTING ELEVATION
- 244.50 EXISTING CONTOUR ELEVATION
- [192.85] FUTURE CENTERLINE ELEVATION

CUT-FILL DEPTH ALONG CENTER LINE:

CUT DEPTH (m)	FILL DEPTH (m)
0 - 0.5	0 - 0.5
0.5 - 1.0	0.5 - 1.0
1.0 - 1.5	1.0 - 1.5
1.5 - 2.0	1.5 - 2.0
>2.0	>2.0

DSEL
david schaeffer engineering ltd
120 Iber Road, Unit 103
Stittsville, Ontario, K2S 1E9
Tel. (613) 836-0856
Fax. (613) 836-7183
www.DSEL.ca

CAIVAN GREENBANK NORTH INC.

CITY OF OTTAWA

GRADING PLAN

SCALE:	1:1000	PROJECT No.:	19-1123
DATE:	MAY 2020	DRAWING:	5