EROSION AND SEDIMENT CONTROL NOTES

GENERAL
THE CONTRACTOR SHALL IMPLEMENT BEST MANAGEMENT PRACTICES, TO PROVIDE FOR PROTECTION OF THE AREA DRAINAGE SYSTEM AND THE RECEIVING WATERCOURSE, DURING CONSTRUCTION ACTIVITIES. THE CONTRACTOR ACKNOWLEDGES THAT FAILURE TO IMPLEMENT APPROPRIATE EROSION AND SEDIMENT CONTROL MEASURES MAY BE SUBJECT TO PENALTIES IMPOSED BY ANY APPLICABLE REGULATORY AGENCY.

THE CONTRACTOR ACKNOWLEDGES THAT SURFACE EROSION AND SEDIMENT RUNOFF RESULTING FROM THEIR CONSTRUCTION OPERATIONS HAS POTENTIAL TO CAUSE A DETRIMENTAL IMPACT TO ANY DOWNSTREAM WATERCOURSE OR SEWER, AND THAT ALL CONSTRUCTION OPERATIONS THAT MAY IMPACT UPON WATER QUALITY SHALL BE CARRIED OUT IN A MANNER THAT STRICTLY MEETS THE REQUIREMENTS OF ALL APPLICABLE LEGISLATION AND REGULATIONS.

AS SUCH, THE CONTRACTOR SHALL BE RESPONSIBLE FOR CARRYING OUT THEIR OPERATIONS, AND SUPPLYING AND INSTALLING ANY APPROPRIATE CONTROL MEASURES, SO AS TO PREVENT SEDIMENT LADEN RUNOFF FROM ENTERING ANY SEWER OR WATERCOURSE WITHIN OR DOWNSTREAM OF THE WORKING AREA.

THE CONTRACTOR ACKNOWLEDGES THAT NO ONE MEASURE IS LIKELY TO BE 100% EFFECTIVE FOR EROSION PROTECTION AND CONTROLLING SEDIMENT RUNOFF AND DISCHARGES FROM THE SITE. THEREFORE, WHERE NECESSARY THE CONTRACTOR SHALL IMPLEMENT ADDITIONAL MEASURES ARRANGED IN SUCH A MANNER AS TO MITIGATE SEDIMENT RELEASE FROM THE CONSTRUCTION OPERATIONS AND ACHIEVE SPECIFIC MAXIMUM PERMITTED CRITERIA WHERE APPLICABLE. SUGGESTED ON-SITE MEASURES MAY INCLUDE, BUT SHALL NOT BE LIMITED TO, THE FOLLOWING METHODS: SEDIMENT PONDS, FILTER BAGS, PUMP FILTERS, SETTLING TANKS, SILT FENCES, STRAW BALES, FILTER CLOTHS, CATCH BASIN FILTERS, CHECK DAMS AND/OR BERMS, OR OTHER RECOGNIZED TECHNOLOGIES AND METHODS AVAILABLE AT THE TIME OF CONSTRUCTION. SPECIFIC MEASURES SHALL BE INSTALLED IN ACCORDANCE WITH THE REQUIREMENTS OF OPSS 577 WHERE APPROPRIATE, OR IN ACCORDANCE WITH MANUFACTURER'S RECOMMENDATIONS.

WHERE, IN THE OPINION OF THE CONTRACT ADMINISTRATOR OR REGULATORY AGENCY, THE INSTALLED CONTROL MEASURES FAIL TO PERFORM ADEQUATELY, THE CONTRACTOR SHALL SUPPLY AND INSTALL ADDITIONAL OR ALTERNATIVE MEASURES AS DIRECTED BY THE CONTRACT ADMINISTRATOR OR REGULATORY AGENCY. AS SUCH, THE CONTRACTOR SHALL HAVE ADDITIONAL CONTROL MATERIALS ON SITE AT ALL TIMES WHICH ARE EASILY ACCESSIBLE AND MAY BE IMPLEMENTED BY HIM AT A MOMENT'S NOTICE.

PRIOR TO COMMENCING WORK, THE CONTRACTOR SHALL SUBMIT TO THE CONTRACT ADMINISTRATOR SIX COPIES OF A DETAILED EROSION AND SEDIMENT CONTROL PLAN (ESCP). THE ESCP WILL CONSIST OF A WRITTEN DESCRIPTION AND DETAILED DRAWINGS INDICATING THE ON-SITE ACTIVITIES AND MEASURES TO BE USED TO CONTROL EROSION AND SEDIMENT MOVEMENT FOR EACH STEP OF THE WORK.

CONTRACTOR'S RESPONSIBILITIES
THE CONTRACTOR SHALL ENSURE THAT ALL WORKERS, INCLUDING SUB-CONTRACTORS, IN THE WORKING AREA ARE AWARE OF THE IMPORTANCE OF THE EROSION AND SEDIMENT CONTROL MEASURES AND INFORMED OF THE CONSEQUENCES OF THE FAILURE TO COMPLY WITH THE REQUIREMENTS OF ALL REGULATORY AGENCIES.

THE CONTRACTOR SHALL PERIODICALLY, AND WHEN REQUESTED BY THE CONTRACT ADMINISTRATOR, CLEAN OUT ACCUMULATED SEDIMENT DEPOSITS AS REQUIRED AT THE SEDIMENT CONTROL DEVICES, INCLUDING THOSE DEPOSITS THAT MAY ORIGINATE FROM OUTSIDE THE CONSTRUCTION AREA. ACCUMULATED SEDIMENT SHALL BE REMOVED IN SUCH A MANNER THAT PREVENTS THE DEPOSITION OF THIS MATERIAL INTO ANY SEWER OR WATERCOURSE AND AVOIDS DAMAGE TO THE CONTROL MEASURE. THE SEDIMENT SHALL BE REMOVED FROM THE SITE AT THE CONTRACTOR'S EXPENSE AND MANAGED IN COMPLIANCE WITH THE REQUIREMENTS FOR EXCESS EARTH MATERIAL, AS SPECIFIED ELSEWHERE IN THE CONTRACT.

THE CONTRACTOR SHALL IMMEDIATELY REPORT TO THE CONTRACT ADMINISTRATOR ANY ACCIDENTAL DISCHARGES OF SEDIMENT MATERIAL INTO EITHER THE WATERCOURSE OR THE STORM SEWER SYSTEM. FAILURE TO REPORT WILL BE CONSTITUTE A BREACH OF THIS SPECIFICATION AND THE CONTRACTOR MAY ALSO BE SUBJECT TO THE PENALTIES IMPOSED BY ANY APPLICABLE REGULATORY AGENCY. APPROPRIATE RESPONSE MEASURES, INCLUDING ANY REPAIRS TO EXISTING CONTROL MEASURES OR THE IMPLEMENTATION OF ADDITIONAL CONTROL MEASURES, SHALL BE CARRIED OUT BY THE CONTRACTOR WITHOUT DELAY.

THE SEDIMENT CONTROL MEASURES SHALL ONLY BE REMOVED WHEN, IN THE OPINION OF THE CONTRACT ADMINISTRATOR, THE MEASURE OR MEASURES, IS NO LONGER REQUIRED. NO CONTROL MEASURE MAY BE PERMANENTLY REMOVED WITHOUT PRIOR AUTHORIZATION FROM THE CONTRACT ADMINISTRATOR. ALL SEDIMENT AND EROSION CONTROL MEASURES SHALL BE REMOVED IN A MANNER THAT AVOIDS THE ENTRY OF ANY EQUIPMENT, OTHER THAN HAND-HELD EQUIPMENT, INTO ANY WATERCOURSE, AND PREVENTS THE RELEASE OF ANY SEDIMENT OR DEBRIS INTO ANY SEWER OR WATERCOURSE WITHIN OR DOWNSTREAM OF THE WORKING AREA. ALL ACCUMULATED SEDIMENT SHALL BE REMOVED FROM THE WORKING AREA AT THE CONTRACTOR'S EXPENSE AND MANAGED IN COMPLIANCE WITH THE REQUIREMENTS FOR EXCESS EARTH MATERIAL.

WHERE, IN THE OPINION OF EITHER THE CONTRACT ADMINISTRATOR OR A REGULATORY AGENCY, ANY OF THE TERMS SPECIFIED HEREIN HAVE NOT BEEN COMPLIED WITH OR PERFORMED IN A SUITABLE MANNER, OR AT ALL, THE CONTRACT ADMINISTRATOR OR REGULATORY AGENCY HAS THE RIGHT TO IMMEDIATELY WITHDRAW ITS PERMISSION TO CONTINUE THE WORK BUT MAY RENEW ITS PERMISSION UPON BEING SATISFIED THAT THE DEFAULTS OR DEFICIENCIES IN THE PERFORMANCE OF THIS SPECIFICATION BY THE CONTRACTOR HAVE BEEN REMEDIED.

SPILL CONTROL NOTES

1. ALL CONSTRUCTION EQUIPMENT SHALL BE RE-FUELED, MAINTAINED, AND STORED NO LESS THAN 30 METRES FROM WATERCOURSES, STREAMS, CREEKS, WOODLOTS, AND ANY ENVIRONMENTALLY SENSITIVE AREAS, OR AS OTHERWISE SPECIFIED.
2. THE CONTRACTOR MUST IMPLEMENT ALL NECESSARY MEASURES IN ORDER TO PREVENT LEAKS, DISCHARGES OR SPILLS OF POLLUTANTS, DELETERIOUS MATERIALS, OR OTHER SUCH MATERIALS OR SUBSTANCES WHICH WOULD OR COULD CAUSE AN ADVERSE IMPACT TO THE NATURAL ENVIRONMENT.
3. IN THE EVENT OF A LEAK, DISCHARGE OR SPILL OF A POLLUTANT, DELETERIOUS MATERIAL OR OTHER SUCH MATERIAL OR SUBSTANCE WITH WOULD OR COULD CAUSE AN ADVERSE IMPACT TO THE NATURAL ENVIRONMENT, THE CONTRACTOR SHALL:
   - 3.1. IMMEDIATELY NOTIFY THE APPROPRIATE FEDERAL, PROVINCIAL, AND LOCAL GOVERNMENT MINISTRIES, DEPARTMENTS, AGENCIES, AND AUTHORITIES OF THE INCIDENT IN ACCORDANCE WITH ALL CURRENT LAWS, LEGISLATION, ACTS, BY-LAWS, PERMITS, APPROVALS, ETC.
   - 3.2. TAKE IMMEDIATE MEASURES TO CONTAIN THE MATERIAL OR SUBSTANCE, AND TO TAKE SUCH MEASURES TO MITIGATE AGAINST ADVERSE IMPACTS TO THE NATURAL ENVIRONMENT.
   - 3.3. RESTORE THE AFFECTED AREA TO THE ORIGINAL CONDITION OR BETTER TO THE SATISFACTION OF THE AUTHORITIES HAVING JURISDICTION.

MUD MAT NOTES

1. THE GRANULAR MATERIAL WILL REQUIRE PERIODIC REPLACEMENT AS IT BECOMES CONTAMINATED BY VEHICLE TRAFFIC.
2. SEDIMENT SHALL BE CLEANED FROM PUBLIC ROADS AT THE END OF EACH DAY.
3. SEDIMENT SHALL BE REMOVED FROM PUBLIC ROADS BY SHOVELING OR SWEEPING AND DISPOSED OF PROPERLY IN A CONTROLLED SEDIMENT DISPOSAL AREA.

STORM DRAIN INLET PROTECTION

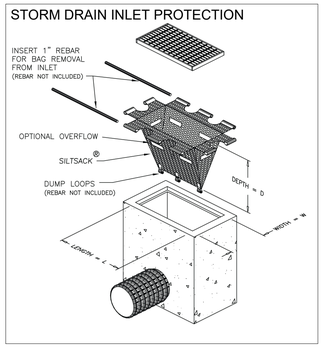

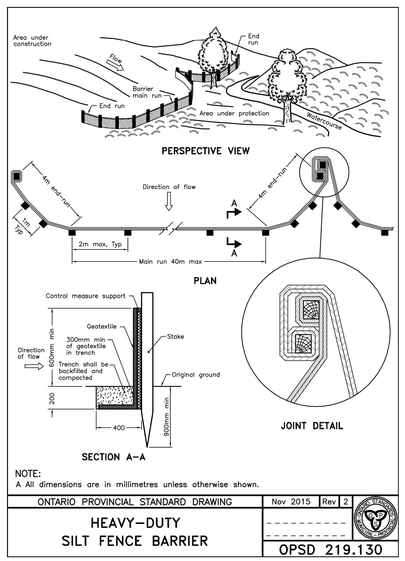

NOTE:
A All dimensions are in millimetres unless otherwise shown.

ONTARIO PROVINCIAL STANDARD DRAWING	Nov 2015	Rev 2
HEAVY-DUTY SILT FENCE BARRIER		OPSD 219.130

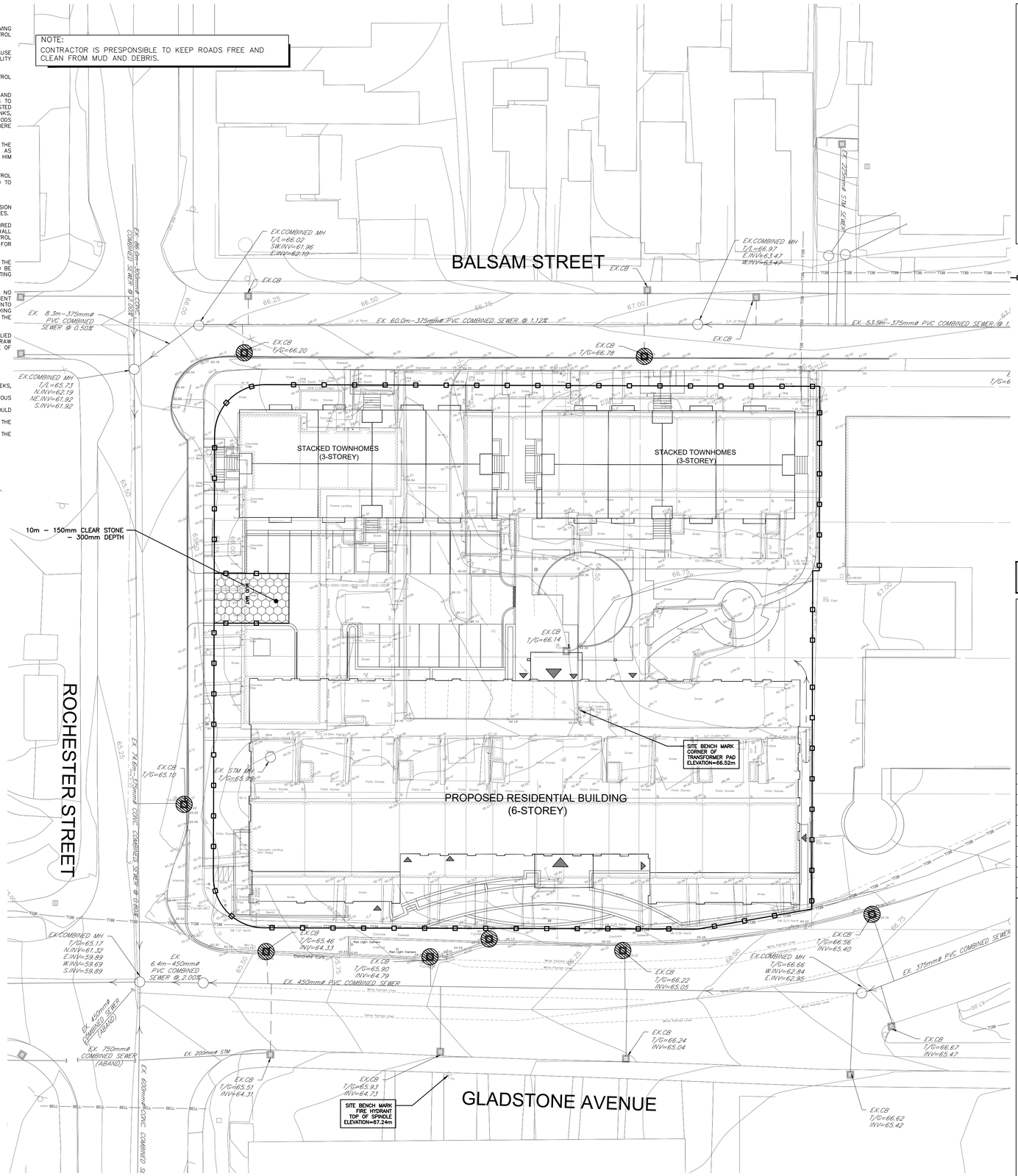

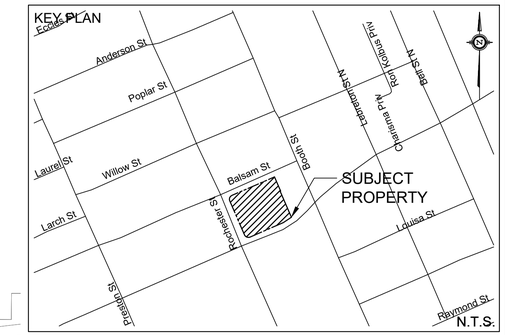

LEGEND

- EROSION CONTROL FENCE PER OPSD 219.130
- MUD MAT
- STREET CB SILT PROTECTION (SEE DETAIL)

NOT FOR CONSTRUCTION

TOPOGRAPHIC INFORMATION
TOPOGRAPHIC INFORMATION PROVIDED BY ANNIS, O'SULLIVAN, VOLLEBEKK LTD
PROJ. NO. 18517-17 OCHC
DATED JANUARY 19, 2018.

SITE PLAN INFORMATION
SITE PLAN PROVIDED BY HOBIN ARCHITECTURE
PROJ. NO. 1818
DATED FEBRUARY 14, 2019.

GEOTECHNICAL STUDY
GEOTECHNICAL RECOMMENDATIONS PROVIDED BY GHD
PROJ. NO. 11140575
DATED OCTOBER 27, 2017

SITE SERVICING AND STORMWATER MANAGEMENT STUDY
SERVICING AND STORMWATER MANAGEMENT RECOMMENDATIONS PROVIDED BY DAVID SCHAEFFER ENGINEERING LTD.
PROJ. NO. 17-963
DATED FEBRUARY 2019

BENCH MARK 1
LOCATED FIRE HYDRANT TOP OF SPINDLE
ELEV=67.24

BENCH MARK 2
LOCATED CORNER OF TRANSFORMER PAD
ELEV=66.52

No.	BY	YY.MM.DD	DESCRIPTION
2	A.W.T.	19.02.25	2ND SUBMISSION
1	G.G.G.	18.12.30	1ST SUBMISSION

PROJECT No. 17-963

LICENSED PROFESSIONAL ENGINEER S. L. MERRIOTT 100100523 PROVINCE OF ONTARIO 2019-02-25

REVIEWED BY

EROSION CONTROL PLAN
811 GLADSTONE AVENUE

© DSEL

OTTAWA COMMUNITY HOUSING
39 AURIGA DRIVE
OTTAWA
Tel. (613) 731-1182

DSEL
david schaeffer engineering ltd
SMART SUBDIVISIONS™
120 Iber Road Unit 103
Stittsville, Ontario, K2S 1E9
Tel. (613) 836-0856
Fax. (613) 836-7183
www.DSEL.ca

DRAWN BY:	G.G.G.	CHECKED BY:	A.D.F.	DRAWING NO.	SHEET NO.
DESIGNED BY:	S.L.M.	CHECKED BY:	A.D.F.	EC-1	4 of 4
SCALE:	1:200	DATE:	DECEMBER 2018		

CITY FILE No.: D02-02-18-0107 & D07-12-18-0181

CITY PLAN No.: 17839

z:\projects\17-963_och_811 gladstone\b_design\b2_drawings\b2-2_main (dsel)\03_spa-submz\2019-02-25_963_prelim_awt.dwg