NOTES: GENERAL

1. CONTRACTOR IS RESPONSIBLE FOR ALL LAYOUT FOR CONSTRUCTION PURPOSES.
2. ALL ELEVATIONS ARE GEODETIC AND UTILIZE METRIC UNITS.
3. JOB BENCH MARK – CONFIRM WITH exp SERVICES INC. PRIOR TO UTILIZATION.
4. ALL GROUND SURFACES SHALL BE EVENLY GRADED WITHOUT PONDING AREAS AND WITHOUT LOW POINTS EXCEPT WHERE APPROVED SWALE OR CATCHBASIN OUTLETS ARE PROVIDED.
5. STRIP AND REMOVE ALL TOPSOIL FROM IMPROVED AREAS.
6. COORDINATE AND SCHEDULE ALL WORK WITH OTHER TRADES AND CONTRACTORS.
7. ALL EDGES OF DISTURBED PAVEMENT SHALL BE SAWCUT TO FORM A NEAT AND STRAIGHT LINE PRIOR TO PLACING NEW PAVEMENT.
8. CURBS TO BE AS PER CITY OF OTTAWA STANDARD SC1.1
9. CONTRACTOR IS TO COMPLY WITH CITY OF OTTAWA REQUIREMENTS FOR TRAFFIC CONTROL WHEN WORKING WITHIN MUNICIPAL RIGHT OF WAYS.
10. RESTORE PAVEMENT STRUCTURE AND SURFACES ON EXISTING ROADS TO A CONDITION AT LEAST EQUAL TO ORIGINAL AND TO THE SATISFACTION OF THE MUNICIPAL AUTHORITIES.
11. ALL MATERIAL SUPPLIED AND PLACED FOR PARKING LOT AND ACCESS ROAD CONSTRUCTION SHALL BE TO OPSS STANDARDS AND SPECIFICATIONS UNLESS OTHERWISE NOTED. (CONSTRUCTION OPSS 206, 310 & 314 MATERIALS OPSS 1001, 1003 & 1010).
12. REFER TO ARCHITECT'S SITE PLAN FOR BUILDING DIMENSIONS AND SITE LAYOUT. DIMENSIONS AND LAYOUT INFORMATION SHALL BE CONFIRMED PRIOR TO COMMENCEMENT OF CONSTRUCTION.
13. REFER TO LANDSCAPE ARCHITECTS PLAN FOR SIDEWALK, PATHWAYS, CONCRETE MEDIAN, PLANTING AND OTHER LANDSCAPE FEATURE MATERIALS AND LOCATIONS.
14. ALL CURB TO BE 150mm ABOVE FINISHED ASPHALT GRADE UNLESS OTHERWISE NOTED.
15. FOR DETAILS OF SOIL CONDITIONS, REFERENCE SHOULD BE MADE TO GEOTECHNICAL REPORT (# PG 2683–1, NOVEMBER 27, 2012) PREPARED BY PATERSON GROUP
16. THE CONTRACTOR SHALL IMPLEMENT BEST MANAGEMENT PRACTICES FOR THE PROTECTION OF THE AREA'S DRAINAGE SYSTEM AND THE RECEIVING WATERCOURSE DURING CONSTRUCTION ACTIVITIES. THIS INCLUDES LIMITING THE AMOUNT OF EXPOSED SOIL, USING FILTER CLOTH UNDER THE GRATES OF CATCHBASINS AND MANHOLES AND INSTALLING SILT FENCES AND OTHER EFFECTIVE SEDIMENT TRAPS. THE CONTRACTOR ACKNOWLEDGES THAT FAILURE TO IMPLEMENT APPROPRIATE EROSION AND SEDIMENT CONTROL MEASURES MAY BE SUBJECT TO PENALTIES IMPOSED BY ANY APPLICABLE AGENCY.
17. THE CONTRACTOR SHALL CONFIRM LOCATION AND ELEVATION OF EXISTING INFRASTRUCTURE TO PREVENT ANY DAMAGE AND IDENTIFY CONFLICTS WITH PROPOSED INFRASTRUCTURE PRIOR TO COMMENCEMENT OF CONSTRUCTION. THE ENGINEER SHALL BE INFORMED IMMEDIATELY OF ANY DISCREPANCIES, OMISSIONS OR CONFLICTS THAT ARE FOUND.
18. DESIGN INFORMATION GIVEN ON THIS PLAN SHALL BE ADHERED TO WITH NO CHANGES WITHOUT PRIOR WRITTEN APPROVAL BY exp SERVICES INC.
19. REFER TO LEGAL PLAN 4M–1283 PREPARED ANNIS, O'SULLIVAN, VOLLEBEKK LTD. FOR LEGAL PROPERTY LINE DESCRIPTIONS.
20. ALL SIDEWALK TO HAVE 1% SLOPE AWAY FROM BUILDINGS WHERE APPLICABLE.
21. ALL BUILDING PADS TO BE PREPARED AT 300mm BELOW FINISHED FLOOR ELEVATION AND 2.0m BEYOND FOOTPRINT.

NOTES: WATERMAIN

1. ALL WATERMAIN WORK AND MATERIAL SHALL BE IN ACCORDANCE WITH CITY OF OTTAWA STANDARDS. NO WORK SHALL COMMENCE UNLESS A CITY WATER WORKS INSPECTOR IS ON SITE.
2. INSTALLATION OF WATER METER AND REMOTE RECEPTACLE SHALL BE IN ACCORDANCE WITH CITY OF OTTAWA STANDARDS.
3. ALL WATERMAIN TO BE INSTALLED AT MINIMUM COVER OF 2.4m UNLESS OTHERWISE NOTED IN THE WATERMAIN TABLE. WATERMAIN WITH LESS THAN 2.4m COVER SHALL BE CONSTRUCTED PER CITY OF OTTAWA DETAIL W–22. WATERMAIN TO BE INSULATED PER CITY OF OTTAWA DETAIL W23 WHERE WATERMAIN IS LESS THAN 2.4m FROM ADJACENT OPEN STRUCTURES
4. WATERMAIN BEDDING IS TO BE AS PER CITY OF OTTAWA DETAIL W–17.
5. CATHODIC PROTECTION REQUIRED FOR ALL IRON FITTINGS PER CITY OF OTTAWA DETAILS W–40 AND W–42.
6. UNLESS OTHERWISE NOTED WATER SERVICE LATERALS TO BUILDING SHALL BE PVC DR 18 AT SIZES INDICATED.
7. CONNECTIONS TO EXISTING WATERMAIN SHALL BE BY CITY FORCES. EXCAVATION, BEDDING, BACKFILLING AND REINSTATEMENT BY CONTRACTOR.
8. IF WATERMAIN MUST BE DEFLECTED TO MEET ALIGNMENT, ENSURE THAT THE AMOUNT OF DEFLECTION USED IS NO GREATER THAN HALF THAT RECOMMENDED BY THE MANUFACTURER.

NOTES: SEWER

1. CATCHBASINS SHALL BE PRECAST 600mm x 600mm AS PER OPSD STANDARD 705.01. FRAMES AND COVERS TO BE AS PER CITY OF OTTAWA STANDARDS.
2. SEWER BEDDING AS PER OPSD STANDARD 802.03 WITH MINIMUM 150mm GRANULAR 'A' BEDDING COMPACTED TO 95% STANDARD PROCTOR DENSITY.
3. ALL WORK SHALL BE PERFORMED IN ACCORDANCE WITH CITY OF OTTAWA STANDARD SPECIFICATIONS AND IN PARTICULAR WITH OPSS 407 AND 410.
4. ALL SANITARY SEWERS ARE TO BE THE SIZES INDICATED AND THE MATERIAL SHALL BE PVC SDR 35.
5. ALL STORM SEWER TO BE PVC SDR 35 OR REINFORCED CONCRETE.
6. ALL MANHOLES, CATCHBASINS, AND CATCHBASIN MANHOLES TO BE BACKFILLED WITH MIN. 0.3m HORIZONTAL THICKNESS OF GRANULAR 'A'.
7. ALL MANHOLES AND CATCHBASIN MANHOLES TO BE PER OPSD 701.010. FRAMES AND COVERS TO BE PER CITY OF OTTAWA STANDARDS.
8. SUPPLY AND INSTALL ALL PIPING AND APPURTENANCES AS SHOWN TO WITHIN 1.0m OF BUILDING WALLS AND PROVIDE TEMPORARY CAPS.
9. ADJUST ALL EXISTING AND PROPOSED MANHOLES TO FINISHED GRADE.
10. INSULATE ANY STORM SEWER WITH LESS THAN 1.5m AND ANY SANITARY SEWER WITH LESS THAN 2.0m OF COVER WITH 100mm OF HIGH DENSITY THERMAL INSULATION 1.0m WIDE PER FROST PROTECTION DETAIL.
11. ALL CB'S AND CBMHS TO HAVE 6.0m OF 150mm SUBDRAIN INSTALLED IN 4 DIRECTIONS UNLESS OTHERWISE NOTED.
12. ALL SIDEWALKS ALONG BUILDINGS SHALL HAVE 150mm SUBDRAINS INSTALLED 0.5m FROM BACK OF CURB.

NOTES: EROSION & SEDIMENT CONTROL

1. THE CONTRACTOR SHALL SUPPLY, INSTALL AND MAINTAIN SILT FENCING, AS SHOWN ON THIS DRAWING, TO PREVENT SEDIMENT FROM AREAS DISTURBED BY CONSTRUCTION FROM ENTERING INTO EX. DITCHES AND WATERCOURSES OR LEAVING THE SITE. SILT FENCES SHALL BE AS PER OPSDs 219.11. ALL EROSION PROTECTION MEASURES SHALL BE INSPECTED DAILY AND AFTER EVERY RAINFALL. THEY SHALL BE MAINTAINED, CLEANED OUT AND REPLACED AS SOON AS SEDIMENT BUILD UP OR INCORRECT INSTALLATION IS OBSERVED BY THE CONTRACTOR OR AS REQUIRED BY THE ENGINEER, CITY OR CONSERVATION AUTHORITY. CLEAN OUT AND REPAIRS SHALL BE MAINTAINED UNTIL CONSTRUCTION IS COMPLETE AND THE SOD HAS TAKEN AND SLOPES ARE STABLE.
2. TRUCKS SHALL ONLY BE WASHED OFF AT AN APPROVED WASH OFF STATION AT AN APPROVED LOCATION ON SITE. ANY FUEL SPILLS SHALL BE CONTAINED & CLEANED UP IMMEDIATELY. THE MINISTRY OF THE ENVIRONMENT MUST BE NOTIFIED IMMEDIATELY IF A SPILL OCCURS. CONTACT THE MOE SPILLS ACTION CENTRE, 1–800–268–6060, IF OUTSIDE THE BUSINESS HOURS OF THE LOCAL MOE OFFICE. CONTAINMENT, CLEAN UP AND REMOVAL OF CONTAMINATED SOILS MUST COMPLY WITH PART X OF THE ENVIRONMENTAL PROTECTION ACT (EPA).
3. THE CONTRACTOR SHALL PROTECT ALL TREES NOT DESIGNATED FOR REMOVAL AS PER CITY SPEC. F–5651. TREES SHALL BE PROTECTED FROM: CONSTRUCTION EQUIPMENT MOVEMENTS, STOCKPILING OF ANY MATERIALS WITHIN DRIPLINES AND FROM UNNECESSARY EXCAVATION ENCROACHING WITHIN DRIP LINES. THE CONTRACTOR SHALL SUPPLY, INSTALL AND MAINTAIN TREE PROTECTION BARRIERS AS PER OPSD–220.01. INSPECT, MAINTAIN, REPAIR AND REPLACE AS NECESSARY UNTIL ALL CONSTRUCTION IS COMPLETE.
4. IN ACCORDANCE WITH BEST MANAGEMENT PRACTICES GEOTEXTILE MATERIAL IS TO BE PLACED UNDERNEATH ALL STORM CATCHBASIN MANHOLE LIDS DURING CONSTRUCTION.

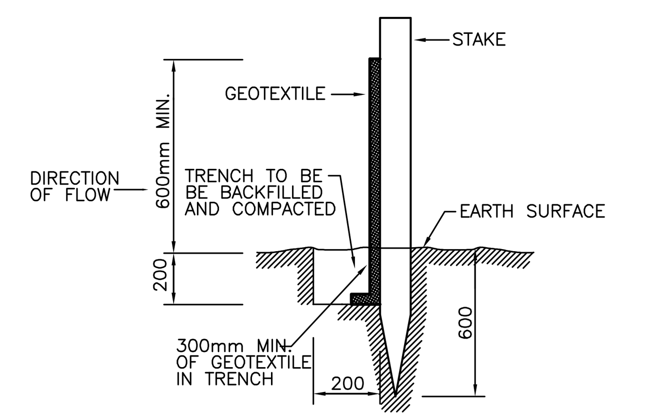

SECTION X-X
N.T.S.

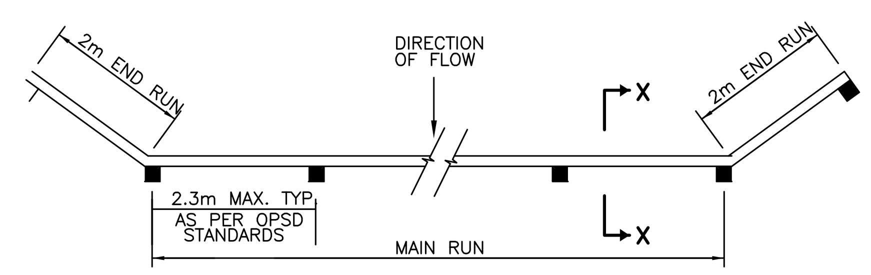

PLAN OF SILT FENCE BARRIER
N.T.S.

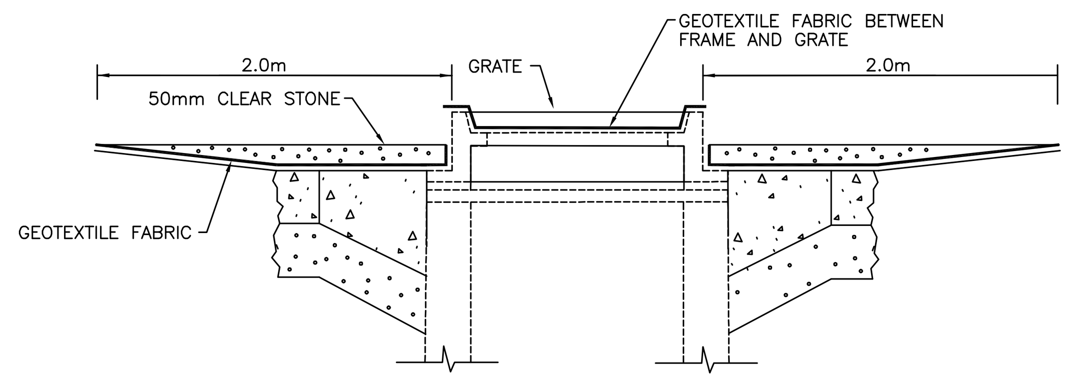

SEDIMENT CATCHES DETAIL
N.T.S.

NOTE

IN ACCORDANCE WITH BEST MANAGEMENT PRACTICES FOR EROSION AND SEDIMENT CONTROL GEOTEXTILE MATERIAL IS TO BE PLACED UNDERNEATH ALL STORM CATCHBASIN AND CATCHBASIN MANHOLE LIDS UNTIL CONSTRUCTION IS COMPLETE.
GEOTEXTILE FABRIC AND 50mm OF CLEAR STONE TO BE PLACED AROUND PERIMETER OF CATCHBASINS AND CATCHBASIN MANHOLES TO ACT AS TEMPORARY SEDIMENT TRAPS.
GEOTEXTILE AND CLEAR STONE TO BE DISPOSED OF PRIOR TO PAVING.

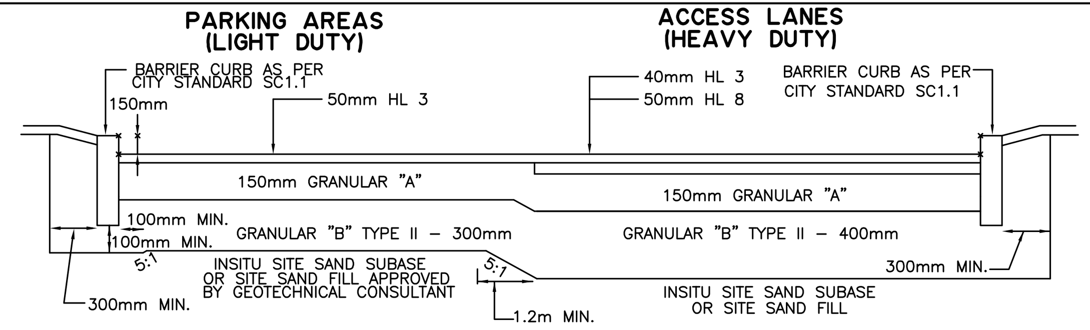

NOTES: REMOVE ALL ORGANICS AND DELETERIOUS MATERIALS UNDERLYING PAVEMENT CONSTRUCTION. SUPPLY AND INSTALL SUBGRADE FILL THAT HAS PRIOR APPROVAL BY GEOTECHNICAL CONSULTANT. PLACE AND COMPACT SUBGRADE FILL IN MAX 300mm LIFTS. COMPACT TO MIN. 98% SPDD.

PROOF ROLL SUBGRADE IN PRESENCE OF GEOTECHNICAL CONSULTANT. EXCAVATE SOFT AREAS AND REPLACE WITH APPROVED NATIVE OR GRANULAR MATERIAL AS DIRECTED BY GEOTECHNICAL CONSULTANT.

COMPACT GRANULARS TO MIN. 98% SPDD. SUPPLY AND PLACE WATER NECESSARY TO ACHIEVE SPECIFIED COMPACTION. INSTALLED GRANULAR "B" TO BE APPROVED BY GEOTECHNICAL CONSULTANT PRIOR TO INSTALLATION OF GRANULAR "A".

MINIMUM PERFORMANCE GRADED 58–34 ASPHALT CEMENT TO BE USED. INSTALLED GRANULAR "A'" SHALL BE APPROVED BY GEOTECHNICAL CONSULTANT PRIOR TO INSTALLATION OF ASPHALT.

PAVEMENT MAKE–UP AND INSTALLATION TO COMPLY WITH THE GEOTECHNICAL REPORT REPORT PREPARED BY PATERSON GROUP INC., NOV. 5, 2012

PAVEMENT DETAIL
N.T.S.

200mmø WATERMAIN TABLE			
STATION	FIN/GRADE	T/W GRADE	COMMENT
0+000	68.38	66.45	TIE INTO EXISTING WATERMAIN ON INDUSTRIAL AVE
0+012.8	68.30	65.20	VALVE & VALVE BOX
0+019.4	68.40	65.08	THRUST BLOCK AND 200X200X150 TEE
0+025.4	68.30	65.15	STM MAIN CROSSING (STM INV=66.800)
0+029.8	68.30	65.20	STM MAIN CROSSING (STM INV=67.00)
0+058.1	68.34	65.94	THRUST BLOCK AND 45° BEND
0+062.1	68.34	65.94	THRUST BLOCK AND 45° BEND
0+067.3	68.30	65.90	200X150X200 HYDRANT TEE AND VALVE
0+093.4	68.48	65.74	SAN MAIN CROSSING (SAN INV=66.24)
0+147.8	68.32	66.10	STM MAIN CROSSING (STM INV=66.91) 200X200X100 TEE (T/W=65.95)
0+168.1	68.35	65.95	200X200X150 HYDRANT TEE
0+170.3	68.35	65.95	11.25° BEND
0+173.5	68.38	66.10	SAN MAIN CROSSING (SAN INV=66.67)
0+176.4	68.42	66.02	11.25° BEND
0+179	68.50	66.10	200X100 REDUCER, VALVE & VALVE BOX
100mmø WATERMAIN TABLE			
STATION	FIN/GRADE	T/W GRADE	COMMENT
1+000	68.41	66.01	200X200X100 TEE
1+002.7	68.42	66.02	VALVE & VALVE BOX
0+023.4	68.60	66.20	45° BEND
0+027.6	68.60	66.20	45° BEND
0+031.7	68.78	66.20	WATERMAIN STUB (INV=66.10)

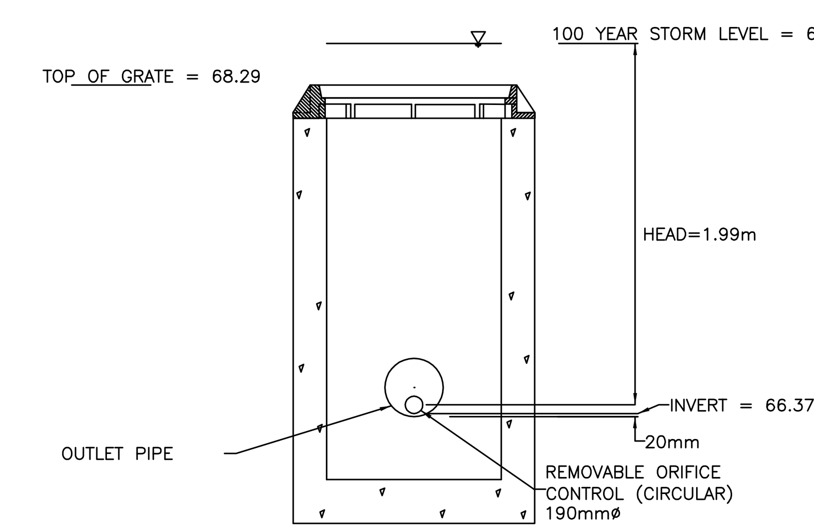

ORIFICE PLATE No. I
CONTROL MH 206
N.T.S.

NOTES

THE POSITION OF ALL POLE LINES, CONDUITS, WATERMAINS, SEWERS AND OTHER UNDERGROUND AND OVERGROUND UTILITIES AND STRUCTURES IS NOT NECESSARILY SHOWN ON THE CONTRACT DRAWINGS, AND WHERE SHOWN, THE ACCURACY OF THE POSITION OF SUCH UTILITIES AND STRUCTURES IS NOT GUARANTEED. BEFORE STARTING WORK, DETERMINE THE EXACT LOCATION OF ALL SUCH UTILITIES AND STRUCTURES AND ASSUME ALL LIABILITY FOR DAMAGE TO THEM.

PRELIMINARY
NOT FOR CONSTRUCTION

NO.	REVISION DESCRIPTION	DATE	BY	APPD
1	ISSUED FOR SITE PLAN APPROVAL	20/12/12	KVR	CJR

SCALE: N.T.S

DESIGNED BY: LICENSED PROFESSIONAL ENGINEER K. V. REPKA 100117574 PROVINCE OF ONTARIO

REVIEWED BY

CLIENT: CONTROLEX REALTY MANAGMENT
233 COLONNADE ROAD
OTTAWA, ON, K2E 7K3

exp Services Inc.
t: +1.613.688.1899 | f: +1.613.225.7330
2650 Queensview Drive, Unit 100
Ottawa, ON K2B 8H6
Canada
www.exp.com
• BUILDINGS • EARTH & ENVIRONMENT • ENERGY •
• INDUSTRIAL • INFRASTRUCTURE • SUSTAINABILITY •

BASEPLAN: A.BASAKAY
DESIGN: K.REPKA
CHECKED: C.RUDDLE
CAD: AB/KR
PROJ. MAN: L.SHEETS
APPROVED: L.SHEETS

PROJECT: OTTAWA TRAINYARDS
575, 585, 595 INDUSTRIAL AVENUE

TITLE: NOTES AND DETAILS

PROJ NO.: OTT–00209294
SURVEY: exp.
DATE: DEC 20, 2012
DRAWING NO.: 209294 –N

Filename: p:\projects\civil engineering services\209000\ott-00209294-a0 - 605 industrial ave - ottawa train yards\d - drawings\209294-n.dwg
Last Saved: 12/21/2012 12:53:56 PM
Last Plotted:12/21/2012 1:40:10 PM Plotted by: repkak
Pen Table:: exp-64.ctb
References: