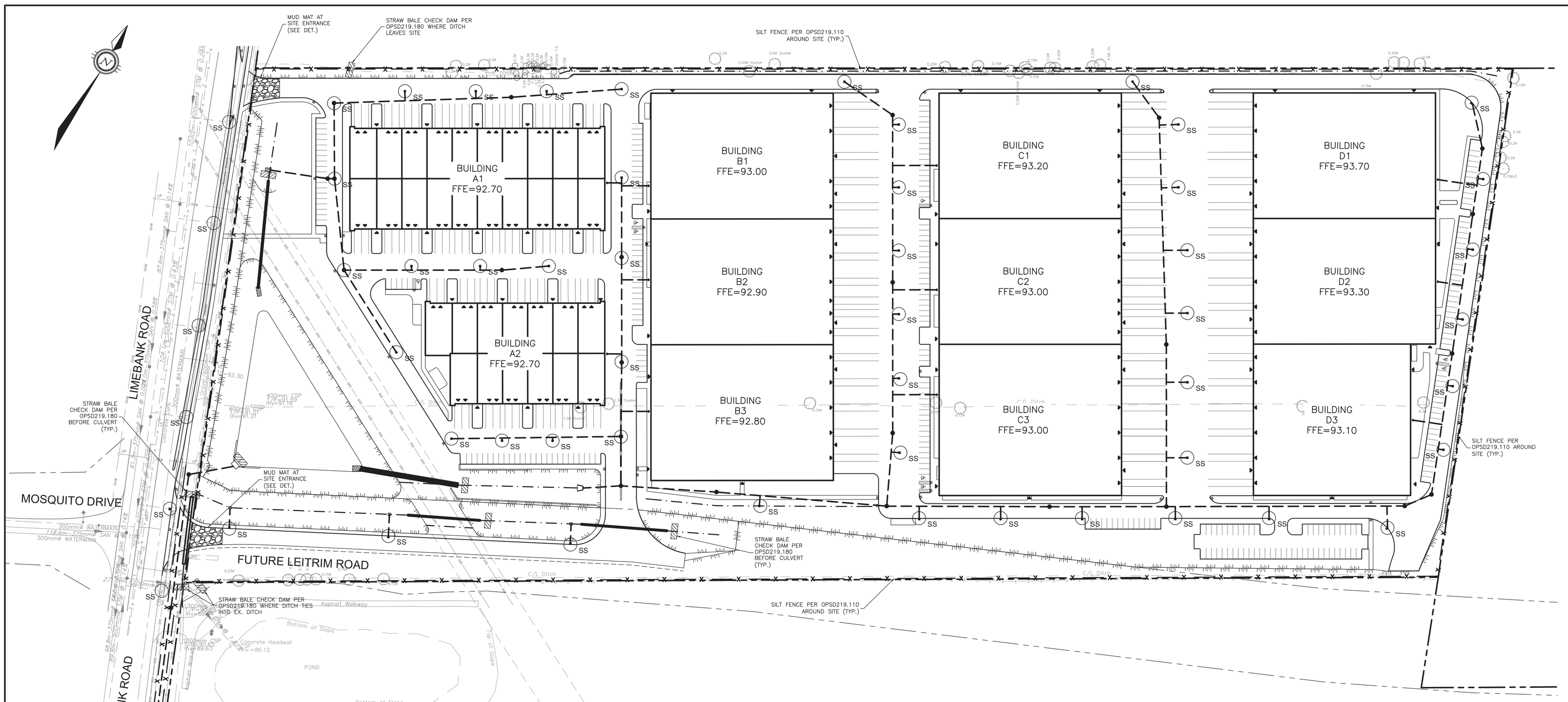

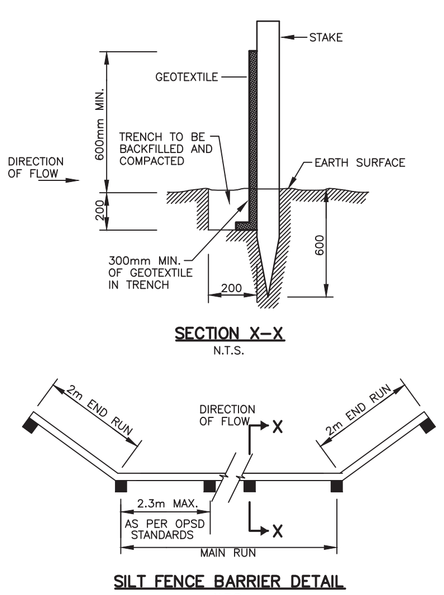

SECTION X–X
N.T.S.

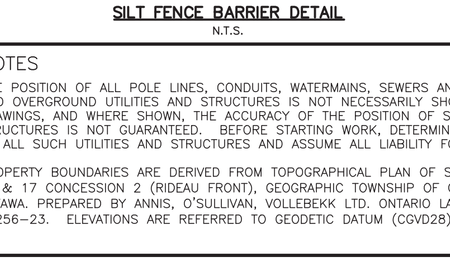

SILT FENCE BARRIER DETAIL
N.T.S.

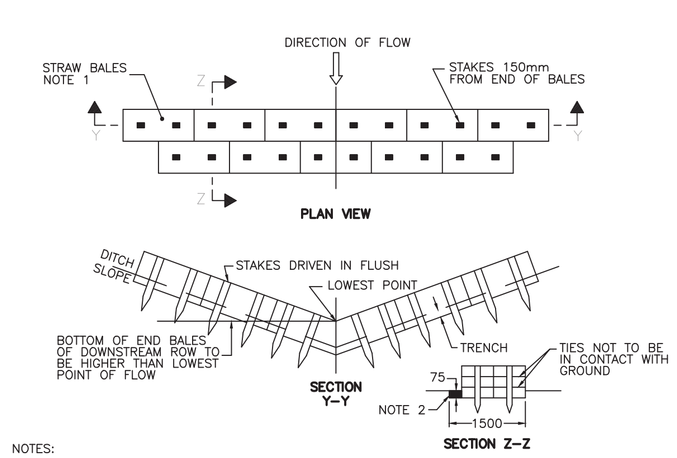

NOTES:
1. NUMBER OF BALES VARIES AND SHALL SUIT DITCH.
2. STRAW BALES SHALL BE BUTTED TIGHTLY AGAINST ADJOINING BALES AND SHAPED TO CONFORM TO THE SIDES OF THE DITCH TO PREVENT WATER FLOW THROUGH BARRIER
3. ALL DIMENSIONS ARE IN MILLIMETRES UNLESS OTHERWISE SHOWN

SEDIMENT CONTROL STRAW BALE DETAIL
OPSD 219.180

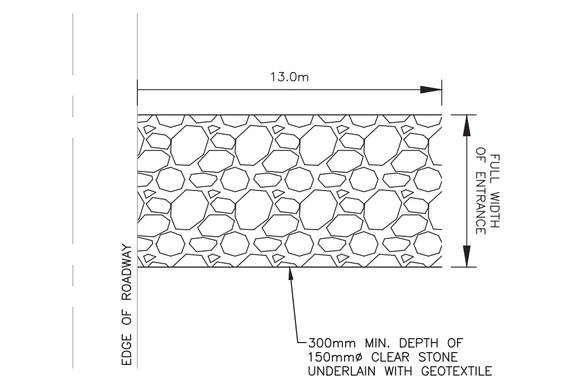

NOTES:
1. MUD MAT TO BE UNDERLAIN WITH A GEOTEXTILE FABRIC.
2. SEDIMENT SHALL BE CLEANED FROM ROADWAYS AS REQUIRED.
3. STORM INLETS IN CLOSE VICINITY TO MUD MAT SHALL BE PROTECTED WITH INLET CONTROL MEASURES.

MUD MAT DETAIL
N.T.S.

Typical Siltsack® Construction - Type A

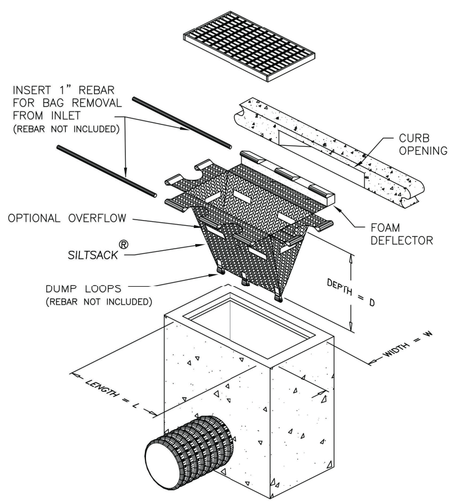

Typical Siltsack® Construction - Type B

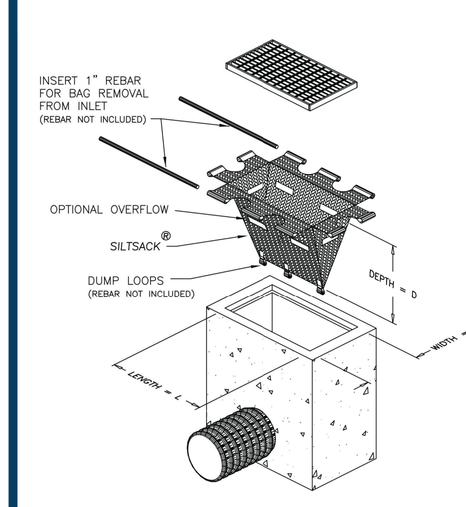

NOTES:
1. THE CONTRACTOR SHALL IMPLEMENT BEST MANAGEMENT PRACTICES TO PROVIDE FOR PROTECTION OF THE AREA DRAINAGE SYSTEM AND THE ULTIMATE RECEIVING WATERCOURSE DURING CONSTRUCTION ACTIVITIES. THE CONTRACTOR ACKNOWLEDGES THAT FAILURE TO IMPLEMENT APPROPRIATE EROSION AND SEDIMENT CONTROL MEASURES MAY BE SUBJECT TO PENALTIES IMPOSED BY ANY APPLICABLE REGULATORY AGENCY.
2. LIMIT THE EXTENT OF EXPOSED SOILS AT ANY GIVEN TIME.
3. EROSION AND SEDIMENT CONTROL MEASURES SHALL BE MAINTAINED UNTIL VEGETATION HAS BEEN RE–ESTABLISHED IN ALL DISTURBED AREAS. RE–VEGETATE DISTURBED AREAS AS SOON AS POSSIBLE.
4. STOCKPILE SOIL AWAY (15 METRES OR GREATER) FROM WATERCOURSES, DRAINAGE FEATURES AND TOP OF STEEP SLOPES.
5. SILT SACKS ARE TO BE PLACED UNDERNEATH THE FRAME AND COVER OF ALL PROPOSED AND EXISTING CATCH BASIN AND OPEN COVER STORM MANHOLES UNTIL CONSTRUCTION IS COMPLETED.
6. A SILT FENCE BARRIER SHALL BE INSTALLED AS PER OPSD 219.110 WHERE INDICATED AND MAINTAINED AS REQUIRED.
7. INSTALL MUD MATS AT ALL CONSTRUCTION ENTRANCES.
8. DURING ACTIVE CONSTRUCTION PERIODS, VISUAL INSPECTIONS SHALL BE UNDERTAKEN ON A WEEKLY BASIS AND AFTER MAJOR STORM EVENTS (>25mm RAIN IN 24 HOUR PERIOD) ON SEDIMENT CONTROL BARRIERS AND ANY DAMAGE REPAIRED IMMEDIATELY.
9. EROSION AND SEDIMENT CONTROL BARRIERS SHALL ALSO BE ASSESSED (AND REPAIRED AS REQUIRED) FOLLOWING SIGNIFICANT SNOWMELT EVENTS.
10. VISUAL INSPECTIONS SHALL ALSO BE UNDERTAKEN IN ANTICIPATION OF LARGE STORM EVENTS (OR A SERIES OF RAINFALL AND/OR SNOWMELT DAYS) THAT COULD POTENTIALLY YIELD SIGNIFICANT RUNOFF VOLUMES.
11. CARE SHALL BE TAKEN TO PREVENT DAMAGE TO EROSION AND SEDIMENT CONTROLS DURING CONSTRUCTION OPERATIONS.
12. IN SOME CASES, BARRIERS MAY BE REMOVED TEMPORARILY TO ACCOMMODATE THE CONSTRUCTION OPERATIONS. THE AFFECTED BARRIERS SHALL BE REINSTATED IMMEDIATELY AFTER CONSTRUCTION OPERATIONS ARE COMPLETED.
13. EROSION AND SEDIMENT CONTROL MEASURES SHALL BE ADJUSTED AS REQUIRED AS THE SITE BECOMES DEVELOPED.
14. SEDIMENT CONTROL DEVICES SHALL BE CLEANED OF ACCUMULATED SEDIMENTATION AS REQUIRED AND REPLACED AS NECESSARY.
15. DURING THE COURSE OF CONSTRUCTION, IF THE ENGINEER BELIEVES THAT ADDITIONAL PREVENTION METHODS ARE REQUIRED TO CONTROL EROSION AND SEDIMENTATION, THE CONTRACTOR SHALL IMPLEMENT ADDITIONAL MEASURES, AS REQUIRED, TO THE SATISFACTION OF THE ENGINEER.
16. CONSTRUCTION AND MAINTENANCE REQUIREMENTS FOR EROSION AND SEDIMENT CONTROLS ARE TO COMPLY WITH OPSS 805.

NOT FOR CONSTRUCTION

NOTES

THE POSITION OF ALL POLE LINES, CONDUITS, WATERMAINS, SEWERS AND OTHER UNDERGROUND AND OVERGROUND UTILITIES AND STRUCTURES IS NOT NECESSARILY SHOWN ON THE CONTRACT DRAWINGS, AND WHERE SHOWN, THE ACCURACY OF THE POSITION OF SUCH UTILITIES AND STRUCTURES IS NOT GUARANTEED. BEFORE STARTING WORK, DETERMINE THE EXACT LOCATION OF ALL SUCH UTILITIES AND STRUCTURES AND ASSUME ALL LIABILITY FOR DAMAGE TO THEM.

PROPERTY BOUNDARIES ARE DERIVED FROM TOPOGRAPHICAL PLAN OF SURVEY OF PART OF LOTS 16 & 17 CONCESSION 2 (RIDEAU FRONT), GEOGRAPHIC TOWNSHIP OF GLOUCESTER, CITY OF OTTAWA. PREPARED BY ANNIS, O'SULLIVAN, VOLLEBEKK LTD. ONTARIO LAND SURVEYORS, REF: 24256–23. ELEVATIONS ARE REFERRED TO GEODETIC DATUM (CGVD28).

NO.	REVISION DESCRIPTION	DATE	BY
2	REISSUED FOR SPA	08/09/26	SM
1	ISSUED FOR SPA	16/10/24	SM

SCALE
0 10m 20m 40m
HORIZONTAL 1:1000

LICENSED PROFESSIONAL ENGINEER
SEP. 08/26
S.A.G.MCCAUGHEY
100217133
PROVINCE OF ONTARIO

Robinson Land Development
200-2936 Baseline Road
Ottawa, ON K2H 1B3
(613) 592-6060 rcii.com

DESIGN	SM
CHECKED	BM
DRAWN	SM
CHECKED	BM
APPROVED	CC

GROUPE MONTONI

4101 LIMEBANK RD.
CITY OF OTTAWA

EROSION & SEDIMENT CONTROL PLAN

PROJECT No.	23074
SURVEY	AOV
DATED	SEPT 2026
DWG. No:	23074-ESC1