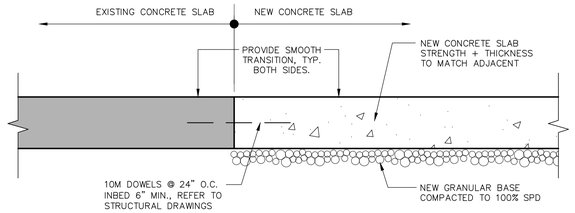

6 SECTION DETAIL
SCALE: N.T.S.

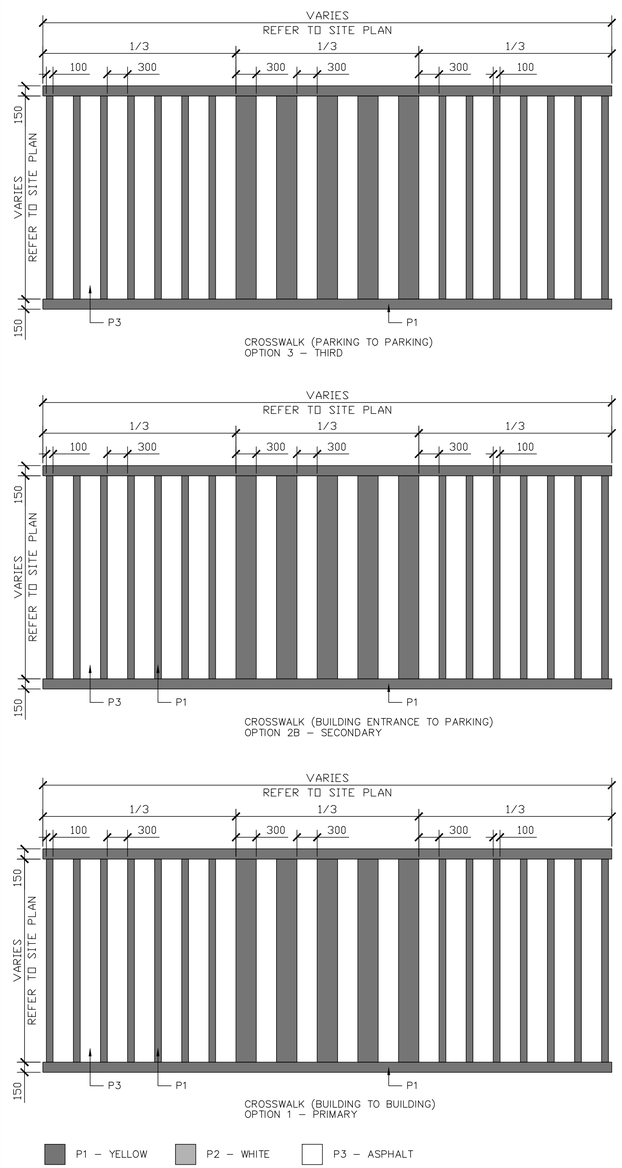

5 TYP. PAINTED CROSSWALK
SCALE: N.T.S.

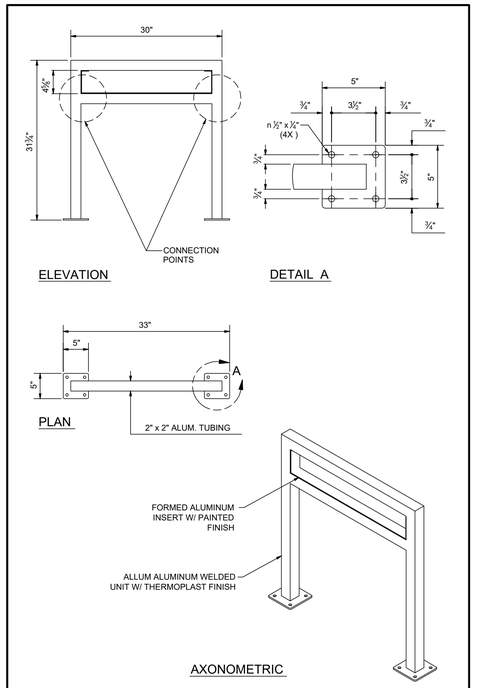

(TYPICAL OF 10, REFER TO FLOOR PLAN)
RIOCAN CUSTOM SKYLINE BIKE RACK
BY HAUSER INDUSTRIES INC.
330 WEBER STREET (N), WATERLOO N2J 3H6, ONTARIO, CANADA
PHONE: (519) 747-1138 TOLL FREE: 1-800-268-7328 www.hauser.ca

4 CUSTOM BIKE RACK DETAILS
SCALE: N.T.S.

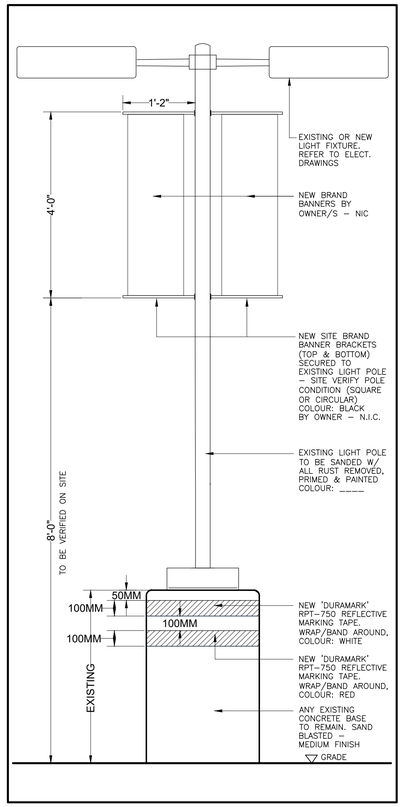

3 TYP. LIGHT POLE DETAIL
SCALE: N.T.S.

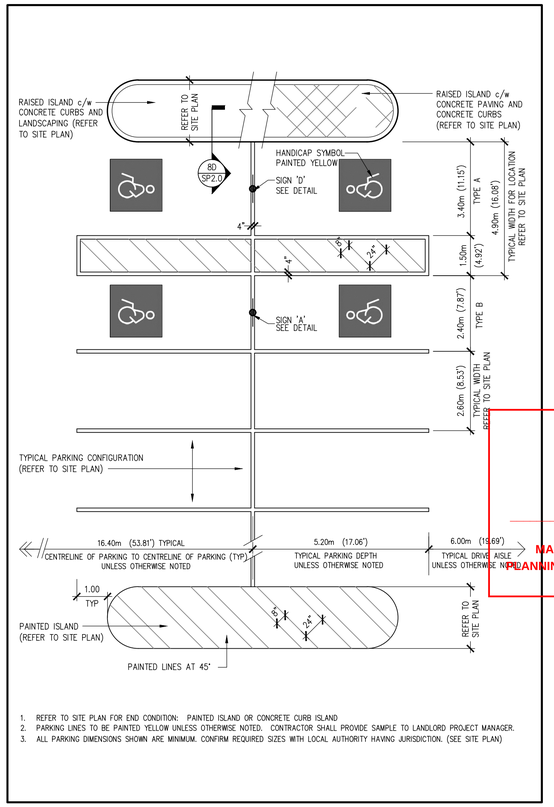

1. REFER TO SITE PLAN FOR END CONDITION: PAINTED ISLAND OR CONCRETE CURB ISLAND
2. PARKING LINES TO BE PAINTED YELLOW UNLESS OTHERWISE NOTED. CONTRACTOR SHALL PROVIDE SAMPLE TO LANDLORD PROJECT MANAGER.
3. ALL PARKING DIMENSIONS SHOWN ARE MINIMUM. CONFIRM REQUIRED SIZES WITH LOCAL AUTHORITY HAVING JURISDICTION. (SEE SITE PLAN)

2 TYP. PARKING DIMENSIONS
SCALE: N.T.S.

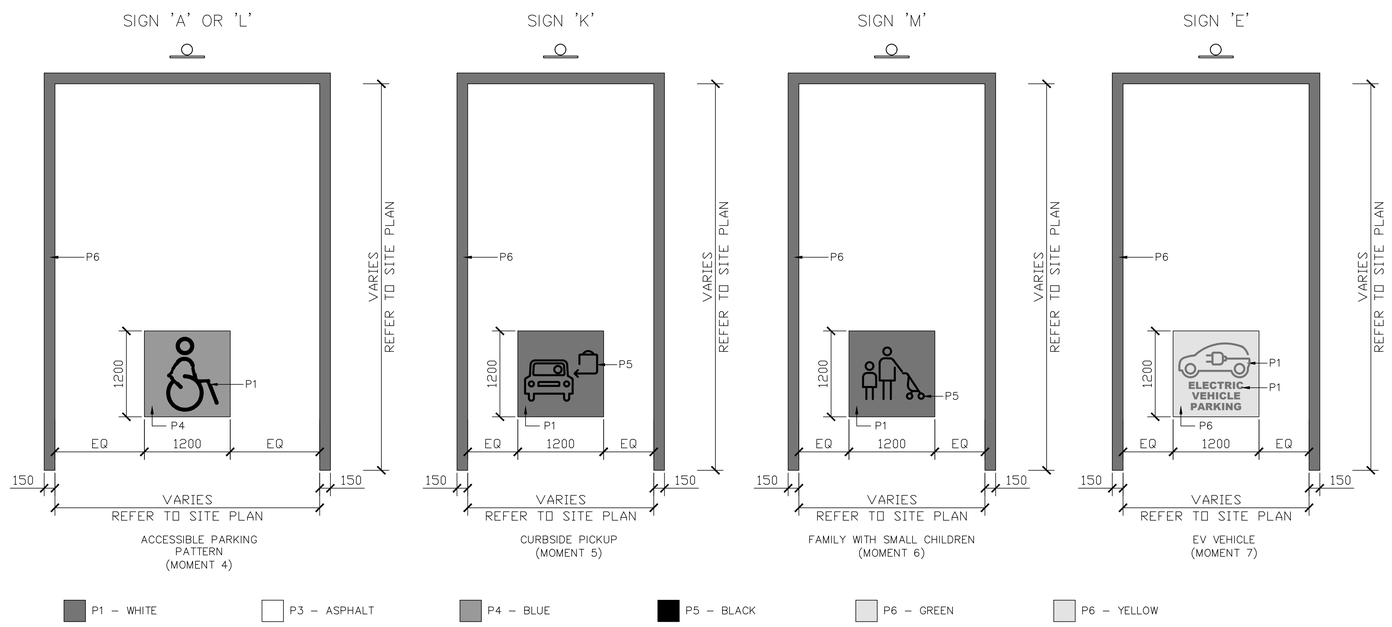

1 BRANDED ID PARKING SPACE (IDS)
SCALE: N.T.S.

GWildman

GERALDINE WILDMAN
MANAGER, DEVELOPMENT REVIEW SOUTH
PLANNING, DEVELOPMENT AND BUILDING SERVICES
DEPARTMENT, CITY OF OTTAWA

APPROVED
By wildmange at 3:39 pm, Jun 19, 2026

REV	BY	DESCRIPTION	DATE
	AZ	REVISED PER CITY COMMENTS 3	MAR 12 2026
	AZ	ISSUED FOR PERMIT	FEB 19 2026
	AZ	ISSUED FOR TENDER	FEB 13 2026
	AZ	ISSUED FOR TENANTS REVIEW 95%	FEB 04 2026
	AZ	REVISED PER CITY COMMENTS 1	OCT 31 2025
	AZ	ISSUED FOR SITE PLAN APPLICATION	MAR 21 2025

REVISIONS

CONTRACTOR SHALL CHECK AND VERIFY ALL DIMENSIONS ON SITE
DO NOT SCALE DRAWINGS

RIO CAN
REAL ESTATE INVESTMENT TRUST
RIOCAN YONGE EGLINTON CENTRE, 500–2300 YONGE STREET
P.O. Box 2386, TORONTO, ON M4P 1E4

ANTHONY ZAGARIA
ARCHITECT
LLA ARCHITECTURE+
365A - 700 LAWRENCE AVENUE WEST
TORONTO, ONTARIO M6A3B4
V:(416)783-6878 - E:STAFF@LLARCH.CA
WWW.LLARCH.CA

ONTARIO ASSOCIATION OF ARCHITECTS
ANTONIO ZAGARIA
LICENCE 6843

PROJECT
PROPOSED REDEVELOPMENT OF
WESTGATE SC
1309 CARLING AVENUE OTTAWA, ONTARIO

DRAWING TITLE
TYPICAL DETAILS

DRAWN BY LV	COMM. NO. 24–73
CHECKED AZ	DRAWING NO.
SCALE AS NOTED	SP2.1
DATE FEB 12 2025	

FILE NUMBER: 007-12-25-0044