LEGEND

- SITE PROPERTY LINE
- PROPOSED CURB
- DC — PROPOSED DEPRESSED CURB
- SWALE c/w SUBDRAIN AND DIRECTION OF FLOW
- M M — PROPOSED MUD MAT
- LIGHT DUTY SILT FENCE (OPSD 219.110)
- PROPOSED FILTER BAGS AT CATCHBASINS, CATCHBASIN MANHOLES AND LANDSCAPE DRAINS
- STRAWBALE CHECK DAM (OPSD 219.180)
- PROPOSED STORM MANHOLE
- PROPOSED CATCHBASIN MANHOLE
- PROPOSED CATCHBASIN
- PROPOSED LANDSCAPE DRAIN
- *EXISTING DITCH CENTRELINE*

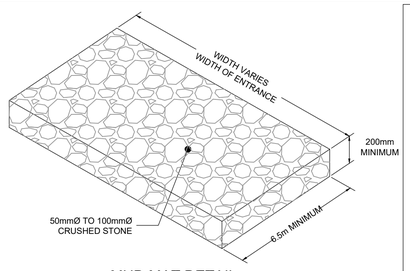

MUD MAT DETAIL
NOT TO SCALE

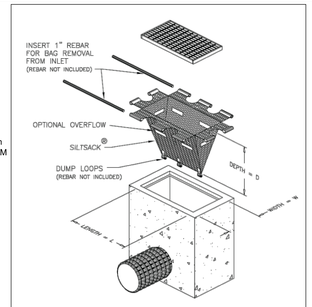

TEMPORARY CATCHBASIN INSERT DETAIL - SILTSACK BY TERRAFIX (OR APPROVED EQUIVALENT)
N.T.S.

EROSION AND SEDIMENT CONTROL NOTES:

THE CONTRACTOR SHALL IMPLEMENT BEST MANAGEMENT PRACTICES, TO PROVIDE FOR PROTECTION OF THE AREA DRAINAGE SYSTEM AND THE RECEIVING WATERCOURSE, DURING CONSTRUCTION ACTIVITIES. THE CONTRACTOR ACKNOWLEDGES THAT FAILURE TO IMPLEMENT APPROPRIATE EROSION AND SEDIMENT CONTROL MEASURES MAY BE SUBJECT TO PENALTIES IMPOSED BY ANY APPLICABLE REGULATORY AGENCY.

1) THE OWNER AGREES TO PREPARE AND IMPLEMENT AN EROSION AND SEDIMENT CONTROL PLAN TO THE SATISFACTION OF THE CITY OF OTTAWA, APPROPRIATE TO THE SITE CONDITIONS, PRIOR TO UNDERTAKING ANY SITE ALTERATIONS (FILLING, GRADING, REMOVAL OF VEGETATION, ETC.) AND DURING ALL PHASES OF SITE PREPARATION AND CONSTRUCTION IN ACCORDANCE WITH THE CURRENT BEST MANAGEMENT PRACTICES FOR EROSION AND SEDIMENT CONTROL SUCH AS BUT NOT LIMITED TO INSTALLING FILTER CLOTHS ACROSS MANHOLE/CATCHBASIN LIDS TO PREVENT SEDIMENTS FROM ENTERING STRUCTURES AND INSTALL AND MAINTAIN A LIGHT DUTY SILT FENCE BARRIER AS REQUIRED.

2) THE CONTRACTOR SHALL PLACE FILTER BAGS UNDER THE CATCHBASIN AND MANHOLE GRATES FOR THE DURATION OF CONSTRUCTION AND WILL REMAIN IN PLACE DURING ALL PHASES OF CONSTRUCTION.

3) SILT FENCING FOR ENTIRE PERIMETER OF SITE, SHALL BE UTILIZED TO CONTROL EROSION FROM THE SITE DURING CONSTRUCTION.

4) THE CONTRACTOR ACKNOWLEDGES THAT FAILURE TO IMPLEMENT EROSION AND SEDIMENT CONTROL MEASURES MAY BE SUBJECT TO PENALTIES IMPOSED BY ANY APPLICABLE REGULATORY AGENCY.

5) PROVIDE MUD MATS AT ALL CONSTRUCTION ACCESS POINTS TO MINIMIZE SEDIMENT TRANSPORT OFFSITE.

6) EROSION AND SEDIMENT CONTROL MEASURES MAY BE MODIFIED IN THE FIELD AT THE DISCRETION OF THE CITY OF OTTAWA SITE INSPECTOR OR CONSERVATION AUTHORITY.

7) ALL EROSION AND SEDIMENT CONTROL MEASURES ARE TO BE INSPECTED BY THE CONTRACTOR DAILY, AND AFTER EVERY RAIN EVENT, TO DETERMINE MAINTENANCE, REPAIR, OR REPLACEMENT REQUIREMENTS.

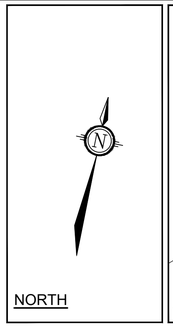

NORTH

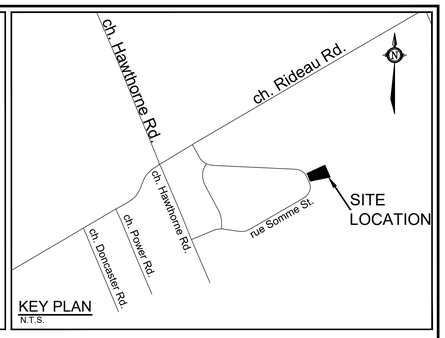

KEY PLAN
N.T.S.

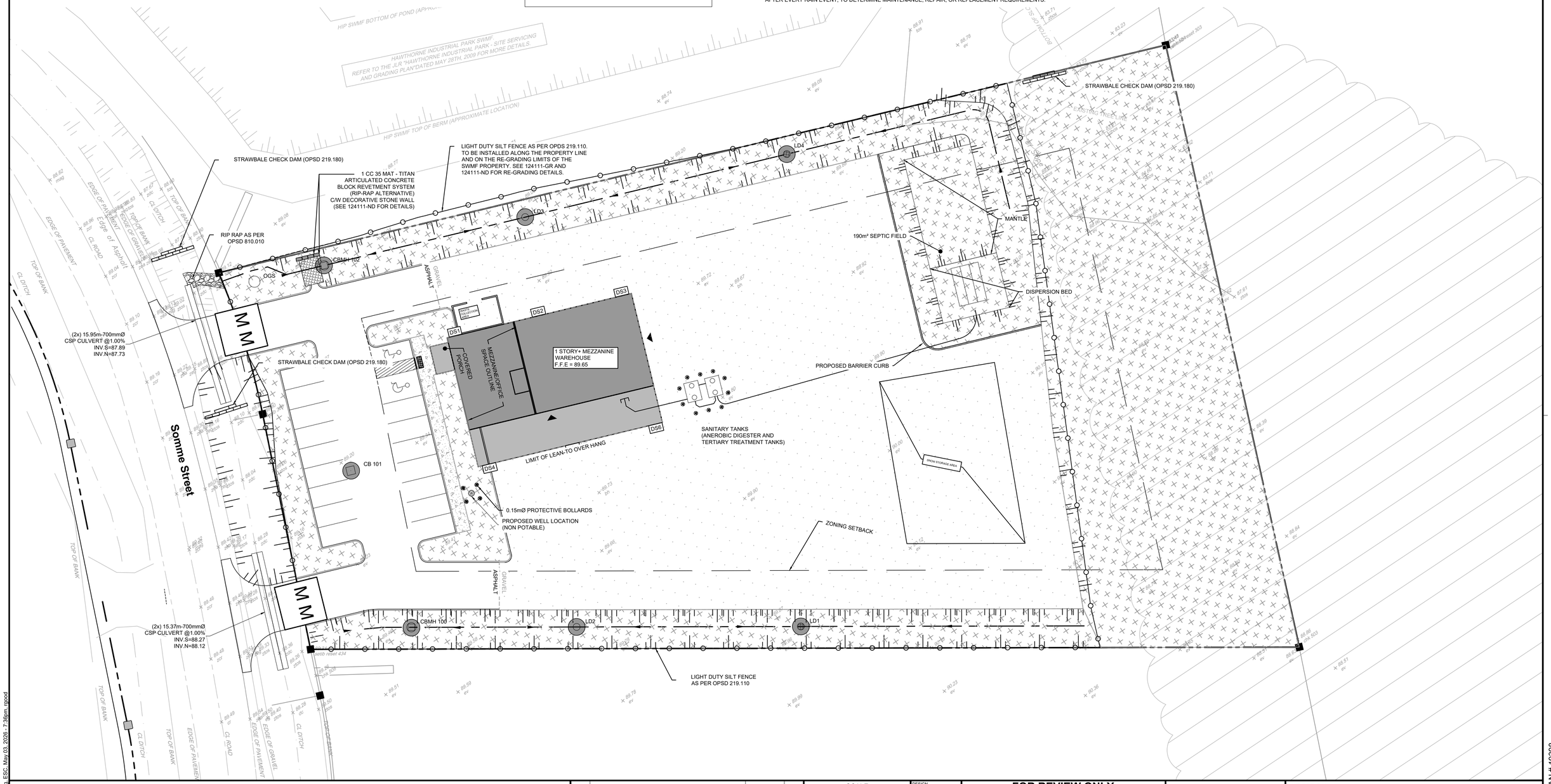

NOTE:
THE POSITION OF ALL POLE LINES, CONDUITS, WATERMAINS, SEWERS AND OTHER UNDERGROUND AND OVERGROUND UTILITIES AND STRUCTURES IS NOT NECESSARILY SHOWN ON THE CONTRACT DRAWINGS, AND WHERE SHOWN, THE ACCURACY OF THE POSITION OF SUCH UTILITIES AND STRUCTURES IS NOT GUARANTEED. BEFORE STARTING WORK, DETERMINE THE EXACT LOCATION OF ALL SUCH UTILITIES AND STRUCTURES AND ASSUME ALL LIABILITY FOR DAMAGE TO THEM.

No.	REVISION	DATE	BY
4.	ISSUED TO ADDRESS CITY COMMENTS	MAY 04/2026	GJM
3.	ISSUED TO ADDRESS CITY COMMENTS	FEB 06/2026	GJM
2.	ISSUED TO ADDRESS CITY COMMENTS	SEP 23/2025	GJM
1.	ISSUED FOR SITE PLAN APPLICATION	JUN 03/2025	GJM

SCALE
1:250
1:250
0 2 4 6 8 10

DESIGN	RJG
CHECKED	ARM
DRAWN	RJG
CHECKED	ARM
APPROVED	GJM

FOR REVIEW ONLY

LICENSED PROFESSIONAL ENGINEER
G.J. MacDONALD
May 04, 2026
PROVINCE OF ONTARIO

NOVATECH
Engineers, Planners & Landscape Architects
Suite 200, 240 Michael Cowpland Drive
Ottawa, Ontario, Canada K2M 1P6
Telephone (613) 254-9643
Facsimile (613) 254-5867
Website www.novatech-eng.com

LOCATION
CITY OF OTTAWA
541 SOMME STREET

DRAWING NAME
EROSION AND SEDIMENT CONTROL PLAN

PROJECT No. 124111
REV REV # 4
DRAWING No. 124111-ESC

PLAN # 19398
FILE # D07-12-25-0077

M:\2024\124111\CAD\Civil\124111-ESC.dwg, ESC, May 03, 2026 - 7:36pm, rgood