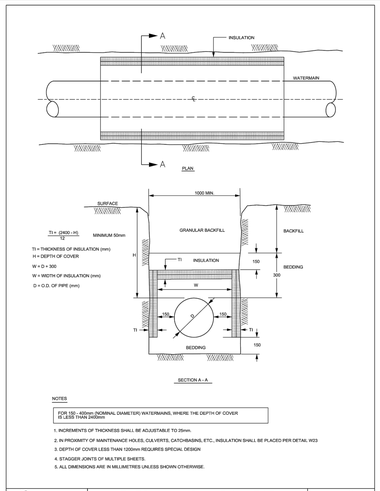

NOTES

FOR 150 < ø300mm (NOMINAL DIAMETER) WATERMAINS, WHERE THE DEPTH OF COVER IS LESS THAN 2400mm

1. INCREMENTS OF THICKNESS SHALL BE ADJUSTABLE TO 25mm.
2. IN PROXIMITY OF MAINTENANCE HOLES, CLs/VERTS, CATCHBASINS, ETC., INSULATION SHALL BE PLACED PER DETAIL W23
3. DEPTH OF COVER LESS THAN 1200mm REQUIRES SPECIAL DESIGN
4. STAGGER JOINTS OF MULTIPLE SHEETS.
5. ALL DIMENSIONS ARE IN MILLIMETRES UNLESS SHOWN OTHERWISE.

Ottawa | THERMAL INSULATION FOR WATERMAINS IN SHALLOW TRENCHES | DATE: MAY 2001 | REV. DATE: MARCH 2013 | DWG. No.: W22

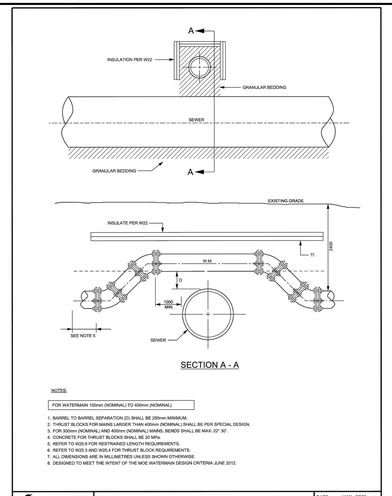

NOTES:

FOR WATERMAIN 100mm (NOMINAL) TO 400mm (NOMINAL)

1. BARREL TO BARREL SEPARATION (D) SHALL BE 250mm MINIMUM.
2. THRUST BLOCKS FOR MAINS LARGER THAN 400mm (NOMINAL) SHALL BE PER SPECIAL DESIGN.
3. FOR 300mm (NOMINAL) AND 400mm (NOMINAL) MAINS, BENDS SHALL BE MAX. 22° 30'.
4. CONCRETE FOR THRUST BLOCKS SHALL BE 20 MPa.
5. REFER TO W23.6 FOR RESTRAINED LENGTH REQUIREMENTS.
6. REFER TO W23.5 AND W23.4 FOR THRUST BLOCK REQUIREMENTS.
7. ALL DIMENSIONS ARE IN MILLIMETRES UNLESS SHOWN OTHERWISE.
8. DESIGNED TO MEET THE INTENT OF THE MOE WATERMAIN DESIGN CRITERIA JUNE 2012.

Ottawa | WATERMAIN CROSSING OVER SEWER | DATE: MAY 2001 | REV. DATE: MARCH 2013 | DWG. No.: W25.2

CB & INLET CONTROL DEVICE (ICD) DATA (Circular Orifice Plate)

STREET NAME	CATCHBASIN ID	PIPE DIA. (mm)	LENGTH (m)	INV. DEPTH (m)	TOP OF GRATE	GRATING COVER	INLET INV (m)	OUTLET INV (m)	ICD DIA. (mm)
PRIVATE STREET 1	DCB_2	200	6.00	1.45	102.27	S19 PERFORATED		100.82	83
PRIVATE STREET 2	CB_3	200	7.39	1.45	102.90	S19 PERFORATED		101.45	
PRIVATE STREET 2	CB_4	200	1.35	1.57	102.92	S19 PERFORATED	101.38	101.35	83
PRIVATE STREET 1	CB_5	200	6.00	1.45	103.00	S19 PERFORATED		101.55	
PRIVATE STREET 1	CB_6	200	3.02	1.54	103.00	S19 PERFORATED	101.49	101.46	108
PRIVATE STREET 2	CB_7	200	4.30	1.57	102.88	S19 PERFORATED	101.37	101.31	83
PRIVATE STREET 2	CB_8	200	6.01	1.45	102.88	S19 PERFORATED		101.43	
PRIVATE STREET 1	CICB_9	200	2.52	1.54	103.19	S22	101.68	101.65	94
PRIVATE STREET 1	CB_10	200	6.00	1.45	103.19	S19 PERFORATED		101.74	
PRIVATE STREET 1	CB_11	200	9.84	1.57	103.22	S19 PERFORATED	101.71	101.65	83
PRIVATE STREET 1	CB_12	200	6.21	1.45	103.22	S19 PERFORATED		101.77	
PRIVATE STREET 1	CB_13	200	3.93	1.45	103.39	S19 PERFORATED		101.94	94
PRIVATE STREET 1	CB_14	200	6.79	1.45	103.19	S19 PERFORATED		101.74	94
PRIVATE STREET 1	CB_15	200	6.00	1.45	103.16	S19 PERFORATED		101.71	
PRIVATE STREET 1	CB_16	200	8.49	1.54	103.16	S19 PERFORATED	101.65	101.62	102
PRIVATE STREET 1	CB_20	200	10.77	1.45	102.89	S19 PERFORATED		101.44	94
PRIVATE STREET 2	CB_21	200	7.75	1.45	102.44	S19 PERFORATED		100.99	
PRIVATE STREET 2	CB_22	200	7.87	1.45	102.37	S19 PERFORATED		100.92	
PRIVATE STREET 1	CB_23	200	5.08	1.45	102.65	S19 PERFORATED		101.20	

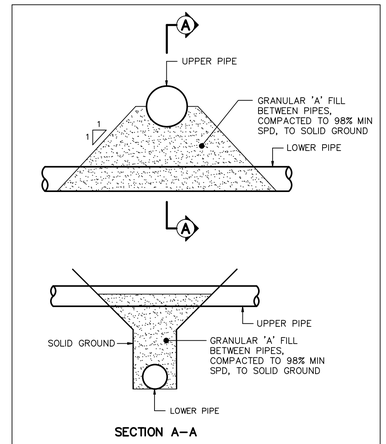

PIPE CROSSING DETAIL
SCALE: N.T.S.

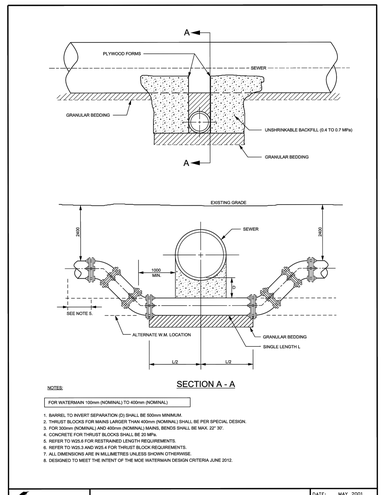

NOTES:

FOR WATERMAIN 150mm (NOMINAL) TO 400mm (NOMINAL)

1. BARREL TO INVERT SEPARATION (D) SHALL BE 500mm MINIMUM.
2. THRUST BLOCKS FOR MAINS LARGER THAN 400mm (NOMINAL) SHALL BE PER SPECIAL DESIGN.
3. FOR 300mm (NOMINAL) AND 400mm (NOMINAL) MAINS, BENDS SHALL BE MAX. 22° 30'.
4. CONCRETE FOR THRUST BLOCKS SHALL BE 20 MPa.
5. REFER TO W23.6 FOR RESTRAINED LENGTH REQUIREMENTS.
6. REFER TO W23.5 AND W23.4 FOR THRUST BLOCK REQUIREMENTS.
7. ALL DIMENSIONS ARE IN MILLIMETRES UNLESS SHOWN OTHERWISE.
8. DESIGNED TO MEET THE INTENT OF THE MOE WATERMAIN DESIGN CRITERIA JUNE 2012.

Ottawa | WATERMAIN CROSSING BELOW SEWER | DATE: MAY 2001 | REV. DATE: MARCH 2013 | DWG. No.: W25

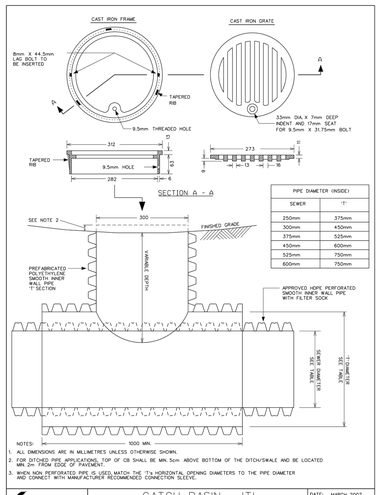

PIPE DIAMETER (INSIDE)	
SEWER	'T'
250mm	375mm
300mm	450mm
375mm	525mm
450mm	600mm
525mm	750mm
600mm	750mm

NOTES:
1. ALL DIMENSIONS ARE IN MILLIMETRES UNLESS OTHERWISE SHOWN.
2. FOR DITCHED PIPE APPLICATIONS, TOP OF CB SHALL BE MIN. 5cm ABOVE BOTTOM OF THE DITCH/SWALE AND BE LOCATED MIN. 2m FROM EDGE OF PAVEMENT.
3. WHEN NON PERFORATED PIPE IS USED, MATCH THE 'T's HORIZONTAL OPENING DIAMETERS TO THE PIPE DIAMETER AND CONNECT WITH MANUFACTURER RECOMMENDED CONNECTION SLEEVE.

Ottawa | CATCH BASIN - 'T' FOR REAR YARD, DITCHED PIPE AND LANDSCAPING APPLICATIONS | DATE: MARCH 2007 | REV. DATE: MARCH 2013 | DWG. No.: S30

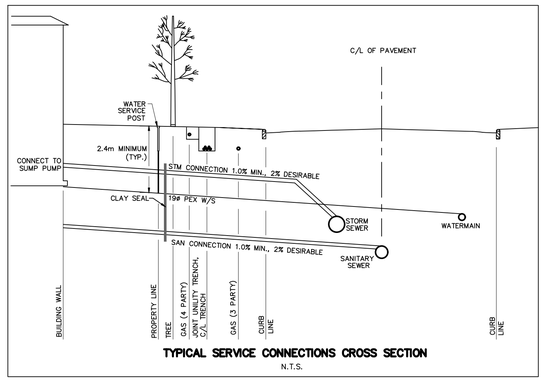

TYPICAL SERVICE CONNECTIONS CROSS SECTION
N.T.S.

TOPOGRAPHIC INFORMATION

TOPOGRAPHIC INFORMATION PROVIDED BY ANNIS, O'SULLIVAN, VOLLEBEKK LTD. PROJECT NO. 21942–22 DATED SEPTEMBER 1, 2022

SITE PLAN INFORMATION

SITE PLAN PROVIDED BY SRN ARCHITECTS, DATED ON OCTOBER 20, 2025.

ELEVATION NOTE

ELEVATIONS ARE GEODETIC AND ARE REFERRED TO THE CGVD28 GEODETIC DATUM, DERIVED FROM VERTICAL CONTROL MONUMENT NO. BM88U502.

ELEVATION = 106.039 m

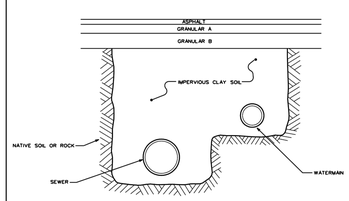

NOTES:
1. CLAY SEAL TO EXTEND FROM BOTTOM OF TRENCH EXCAVATION TO UNDERSIDE OF ROAD STRUCTURE.
2. CLAY SEAL TO EXTEND FULL TRENCH WIDTH TO EXISTING NATIVE SOILS WITH A MINIMUM THICKNESS OF 1.0m ALONG PIPES.
3. CLAY SEAL TO BE LOCATED SO THAT NO PIPE JOINTS ARE WITHIN THE CLAY SEAL MATERIAL.

Ottawa | CLAY SEAL FOR PIPE TRENCHES | DATE: MAY 2001 | REV. DATE: MARCH 2008 | DWG. No.: S8

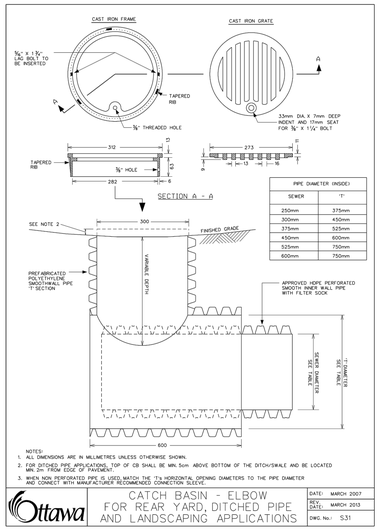

PIPE DIAMETER (INSIDE)	
SEWER	'T'
250mm	375mm
300mm	450mm
375mm	525mm
450mm	600mm
525mm	750mm
600mm	750mm

NOTES:
1. ALL DIMENSIONS ARE IN MILLIMETRES UNLESS OTHERWISE SHOWN.
2. FOR DITCHED PIPE APPLICATIONS, TOP OF CB SHALL BE MIN. 5cm ABOVE BOTTOM OF THE DITCH/SWALE AND BE LOCATED MIN. 2m FROM EDGE OF PAVEMENT.
3. WHEN NON PERFORATED PIPE IS USED, MATCH THE 'T's HORIZONTAL OPENING DIAMETERS TO THE PIPE DIAMETER AND CONNECT WITH MANUFACTURER RECOMMENDED CONNECTION SLEEVE.

Ottawa | CATCH BASIN - ELBOW FOR REAR YARD, DITCHED PIPE AND LANDSCAPING APPLICATIONS | DATE: MARCH 2007 | REV. DATE: MARCH 2013 | DWG. No.: S31

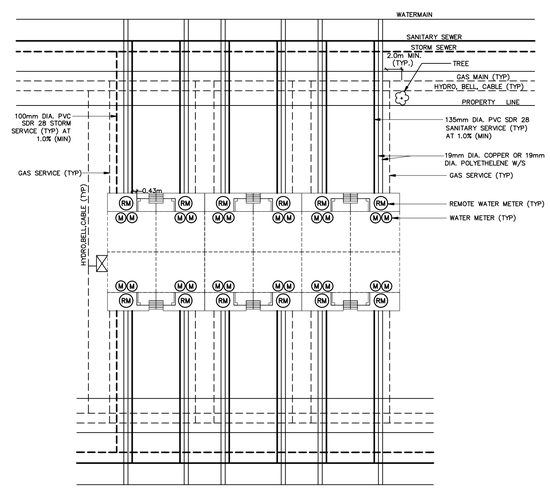

TYPICAL SERVICE CONNECTION STACKED TOWNHOMES

No.	BY	DATE	DESCRIPTION
3	S.L.M	2025–12–19	3rd SUBMISSION
2	S.L.M	2025–10–24	2nd SUBMISSION
1	S.L.M	2025–06–20	1st SUBMISSION

Ottawa | CITY OF OTTAWA

PROJECT No. 1295_Block13

LICENSED PROFESSIONAL ENGINEER S. L. MERRICK 100186523 2025-12-19 PROVINCE OF ONTARIO

Minto Group

ABBOTT'S RUN
BLOCK 13

DSEL
120 Iber Road, Unit 103
Stittsville, ON K2S 1E9
Tel. (613) 836-0856
Fax. (613) 836-7183
www.DSEL.ca

DETAILS AND TABLE

© DSEL

DRAWN BY: E.D.	CHECKED BY: S.L.M.	SHEET NO.	
DESIGNED BY: E.D.	CHECKED BY: S.L.M.	2	OF 19
SCALE: 1:500	DATE: JUNE 2025		

CITY FILE No. D07-12-25-0089 CITY PLAN No.19356