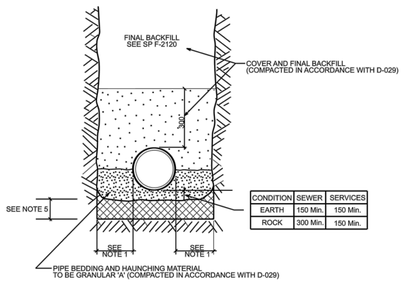

CONDITION	SEWER	SERVICES
EARTH	150 Min.	150 Min.
ROCK	300 Min.	150 Min.

NOTES:

1.

PIPE INSIDE DIAMETER (mm)	CLEARANCE (mm)
900 OR LESS	CONC 450 PVC 450
OVER 900	500

2. FINAL BACKFILL - APPROVED NATIVE MATERIAL OR SELECT SUBGRADE IN ACCORDANCE WITH F-2120.
3. ALL DIMENSIONS ARE IN MILLIMETRES UNLESS SHOWN OTHERWISE.
4. INITIAL BACKFILL MATERIAL
   - CONCRETE PIPE - GRANULAR 'A', GRANULAR 'B', OR SELECT SUBGRADE MATERIAL WITH 100% PASSING THE 37.5 mm SIEVE
   - PVC PIPE - GRANULAR 'A'
5. WHEN APPROVED BY THE CONTRACT ADMINISTRATOR, POOR SOILS SHALL BE EXCAVATED TO CREATE A FOUNDATION THAT SHALL BE FILLED TO THE BOTTOM OF THE BEDDING WITH GRANULAR 'B'.

N.T.S.

Ottawa | SINGLE TRENCH (SEWER & SEWER SERVICES) | DATE: MAY 2001 | REV. DATE: MARCH 2021 | DWG. No.: S6

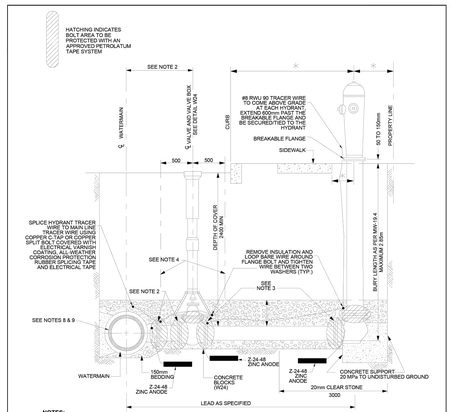

NOTES:

FOR ALL WATERMAINS

1. SEE DETAIL W20 FOR HYDRANTS IN DITCH AREAS.
2. FOR WATERMAINS 400mm AND UNDER, LOCATE VALVE WITHIN 1.0m OF CENTRELINE. RETAINING/RESTRAINING DEVICES TO BE UTILIZED FOR WATERMAINS 600mm AND OVER, BOLT VALVE WITH FLANGED END DIRECTLY TO FLANGED TEE
3. RETAINING/RESTRAINING DEVICES TO BE UTILIZED
4. HYDRANT BREAKABLE FLANGE ELEVATION TO BE ESTABLISHED PRIOR TO INSTALLATION. REFER TO MW-19.4 AND F-4414
5. SEE SPF-2120 FOR BACKFILL REQUIREMENTS IN THIS AREA.
6. SEE F-4414 FOR HYDRANT LOCATION REQUIREMENTS
7. ALL MEASUREMENTS ARE IN MILLIMETRES UNLESS OTHERWISE NOTED
8. FOR ALL 300mm WATERMAINS USE A 300 x 150 TANGENTIAL TEE WITH THE 150mm OUTLET ON TOP
9. FOR ALL 400mm WATERMAINS USE A 400 x 150 TANGENTIAL TEE WITH THE 150mm OUTLET ON TOP
10. "DUCTILE IRON ONLY" THERMITE WELD TWO #8 RWU90 CABLES ACROSS EACH PIPE/FITTING JOINT OR CONNECTION TO ENSURE ELECTRICAL CONTINUITY ALONG ALL METALLIC COMPONENTS
11. ALL MATERIALS SHALL BE IN ACCORDANCE WITH MW-19.15
12. TRACER WIRE BOLT CONNECTIONS TO BE COMPLETED PER W55
13. TRACER WIRE SPLICES TO BE COMPLETED PER W47

Ottawa | TITLE: HYDRANT INSTALLATION - NEW CONSTRUCTION | DATE: MAY 2001 | REV: MAR 2023 | DWG No: W19

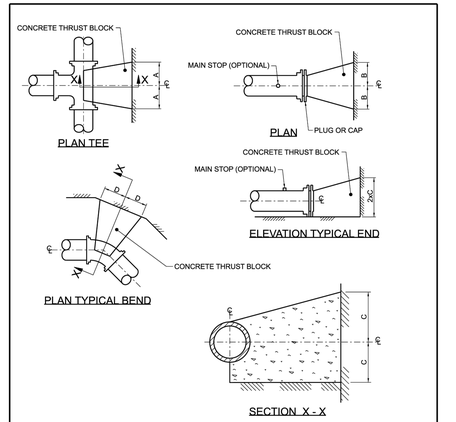

NOTES:

1. CONCRETE SHALL BE PLACED TO WITHIN 50mm OF FACE OF THE BELL.
2. BOND BREAKER TO BE USED BETWEEN CONCRETE AND FITTINGS.
3. ALL DIMENSIONS ARE IN MILLIMETERS UNLESS OTHERWISE SHOWN.
4. REFER TO W25.4 FOR ADDITIONAL REQUIREMENTS.
5. THRUST BLOCKS SHALL BE 20 MPa. CONCRETE AND AS SHOWN ON ABOVE DRAWINGS UNLESS OTHER DIRECTED BY THE CONTRACT ADMINISTRATOR. THE BLOCK SHALL BE CENTERED ON THE THRUST FORCE AND SHALL ALSO PARTIALLY CRADLE THE FITTING TO DISTRIBUTE THE FORCE. THE SIDES OF THE BLOCK SHALL BE 50mm FROM THE JOINT ON EITHER SIDE OF THE BEND OR TEE.
6. THE CONCRETE WHERE POSSIBLE SHALL BE PLACED AGAINST UNDISTURBED SOIL AT THE BOTTOM AND SIDE OF THE TRENCH. WHERE THRUST BLOCKS CAN NOT BE POURED TO UNDISTURBED SOIL, OR WHERE IT WOULD CONFLICT WITH EXISTING OR FUTURE INFRASTRUCTURE, THE THRUST BLOCK SHALL BE DESIGNED BY A PROFESSIONAL ENGINEER.
7. EXCEPT FOR THE ADDITION OF WATER, CONCRETE FOR THRUST BLOCKS SHALL COME PREMIXED FROM CONCRETE SUPPLIER, AS 'READY MIX' FROM A CONCRETE TRUCK. ON-SITE MIXING OF CEMENT, SAND AND AGGREGATE ETC. BY THE CONTRACTOR, FOR THE PURPOSE OF MAKING CONCRETE THRUST BLOCKS/ ANCHORS WILL NOT BE ACCEPTED.

N.T.S.

Ottawa | CONCRETE THRUST BLOCKS FOR PVC AND DI PIPE 400mm AND UNDER | DATE: MAY 2001 | REV. DATE: MARCH 2022 | DWG. No.: W25.3

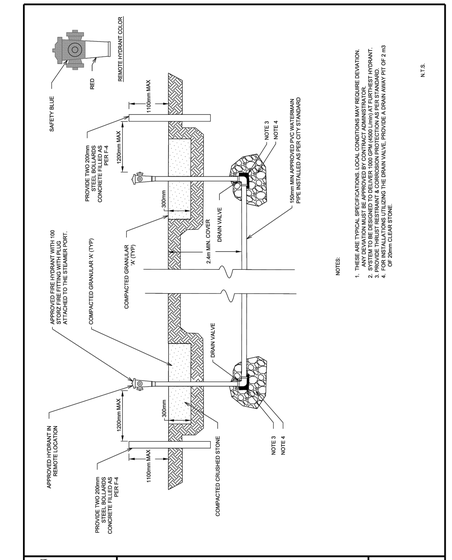

NOTES:

1. THESE ARE TYPICAL SPECIFICATIONS. LOCAL CONDITIONS MAY REQUIRE DEVIATION. ANY DEVIATION MUST BE APPROVED BY THE CONTRACT ADMINISTRATOR. A FIRE HYDRANT SYSTEM TO BE DESIGNED TO DELIVER 189 GPM HIGHLY AT EVERY HYDRANT.
2. APPROVED FIRE HYDRANT PITTING TO BE INSTALLED AS PER CTT STANDARD.
3. FOR INSTALLATIONS UTILIZING THE DRAIN VALVE, PROVIDE A DRAIN ASSY PT-1F 2 x h3 OF 20mm CLEAR STONE.
4. SEE F-4414 FOR HYDRANT LOCATION REQUIREMENTS.

N.T.S.

Ottawa | TYPICAL REMOTE FIRE PROTECTION - SUPPLY MAIN c/w HYDRANTS | DATE: MARCH 2016 | REV. DATE: | DWG. No.: W54

1. SOIL DESCRIPTION: VERY FINE SANDS, SANDY CLAYS, CLAYS.
SOILS WITH TYPICAL BEARING STRENGTH OF 100 TO 199 KPa

PIPE DIAMETER	DIMENSION NOTED ON W25.3			
	A	B	C	D
102	250	250	200	200
152	400	400	250	300
203	550	550	300	450
254	650	650	400	500
305	800	800	450	650
406	1050	1050	600	850

2. SOIL DESCRIPTION: SILTY SAND GRAVELS OR CLAYEY SAND GRAVEL MIXTURES, MODERATE AMOUNT OF FINES.
SOILS WITH TYPICAL BEARING STRENGTH OF 200 TO 299 KPa

PIPE DIAMETER	DIMENSION NOTED ON W25.3			
	A	B	C	D
102	200	200	150	150
152	250	250	200	200
203	350	350	250	270
254	450	450	300	350
305	500	500	350	400
406	750	750	400	600

3. SOIL DESCRIPTION: SANDS, GRAVELS AND GRAVEL-SAND MIXTURES, LITTLE OR NO FINES.
SOILS WITH TYPICAL BEARING STRENGTH OF 300 KPa AND OVER

PIPE DIAMETER	DIMENSION NOTED ON W25.3			
	A	B	C	D
102	150	150	150	150
152	200	200	200	200
203	300	300	200	230
254	400	400	250	270
305	450	450	300	300
406	650	650	350	450

NOTES:

1. THE ABOVE THRUST BLOCK DIMENSIONS MEET OR EXCEED THE WATERMAIN DESIGN CRITERIA FOR FUTURE ALTERATIONS AUTHORIZED UNDER A DRINKING WATER WORKS PERMIT.
2. THE ASSUMPTIONS MADE FOR THE ABOVE CALCULATIONS ARE AS FOLLOWS:
   a) MAXIMUM OPERATING PRESSURE OF 100 psi.
   b) MAXIMUM SURGE PRESSURE WITH A FLOW VELOCITY CHANGE OF 0.6 m/s OF 115 psi (115 psi FOR CLASS 52 DI AND FOR PVC MAX. SURGE IS 35 psi)
3. THE TABLES APPLY TO BOTH DUCTILE IRON AND PVC. WHERE ONE LENGTH EXCEEDED THE OTHER THE LONGER LENGTH WAS USED.
4. DIMENSIONS MAY BE ADJUSTED SO LONG AS THE BEARING SURFACE AREA OF THE THRUST BLOCK IS NOT REDUCED.
4. TO BE USED IN CONJUNCTION WITH W25.3.

Ottawa | THRUST BLOCK DIMENSION TABLES FOR PVC AND DI PIPE 400mm AND UNDER | DATE: MAY 2001 | REV. DATE: MARCH 2011 | DWG. No.: W25.4

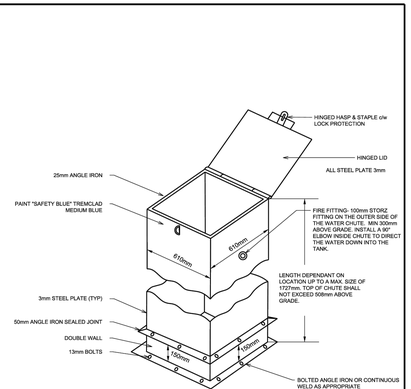

Ottawa | WATER FILL STATION | DATE: MARCH 2016 | REV. DATE: | DWG. No.: W51

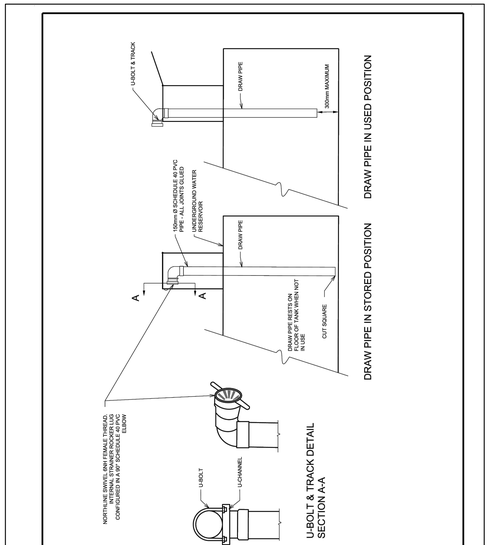

Ottawa | UNDERGROUND WATER RESERVOIR DRAW PIPE DETAIL | DATE: MARCH 2016 | REV. DATE: | DWG. No.: W52

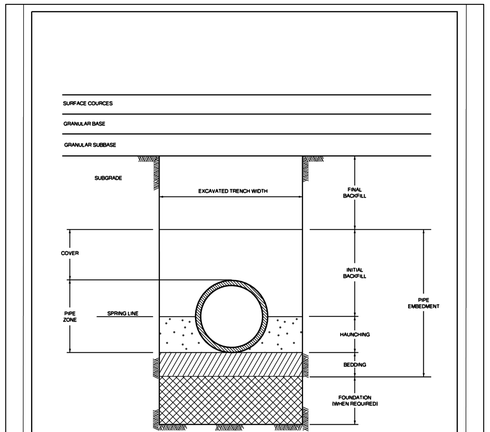

NOTES

1. ANY REFEREES IN THE STANDARD TO "BACKFILL" TO BE INTERPRETED AS "FINAL BACKFILL".
2. ANY REFERENCES IN THE STANDARD TO "BEDDING" TO BE INTERPRETED AS "PIPE EMBEDMENT".

Ottawa | STANDARD TRENCH TERMINOLOGY | DATE: MARCH 2006 | REV. DATE: | DWG. No. S5

FOR PERMITTING
NOT TO BE USED FOR CONSTRUCTION

DRAWING No.	DESCRIPTION	REV	DESCRIPTION	PREPARED BY	CHECKED BY	DATE
		AB	FOR PERMITTING	B. THOMAS	V. BRUNELLE P. Eng. P.E.O No. 100617887	2026-01-21
		AA	FOR PERMITTING	B. THOMAS	V. BRUNELLE P. Eng. P.E.O No. 100617887	2025-07-24

REFERENCE DRAWINGS — REVISIONS

SEAL: LICENSED PROFESSIONAL ENGINEER V. BRUNELLE 100617887 PROVINCE OF ONTARIO 2026-01-26

CLIENT: Evolugen by Brookfield Renewable

PROJECT: TRAIL ROAD BESS

TITLE: CIVIL BESS SITE STANDARD DETAILS

DESIGNED BY: B. THOMAS	DRAFTED BY: A. MENESES
PREPARED BY: B. THOMAS	CHECKED BY: V. BRUNELLE P. Eng. P.E.O No. 100617887
SCALE: N.T.S	DATE: 2025-07-02

DRAWING No.:	SHEET:	SIZE:	REV.
7154024-200000-41-D01-0004	01	A1	AB

BY:MENESES, ANDRES
PRINTED:2026-01-20 09:37:14

G:\7154\024\40_ING_ENG\41_CIVIL\AM\IN PROGRESS\7154024-200000-41-D01-0004_DETAILS.DWG