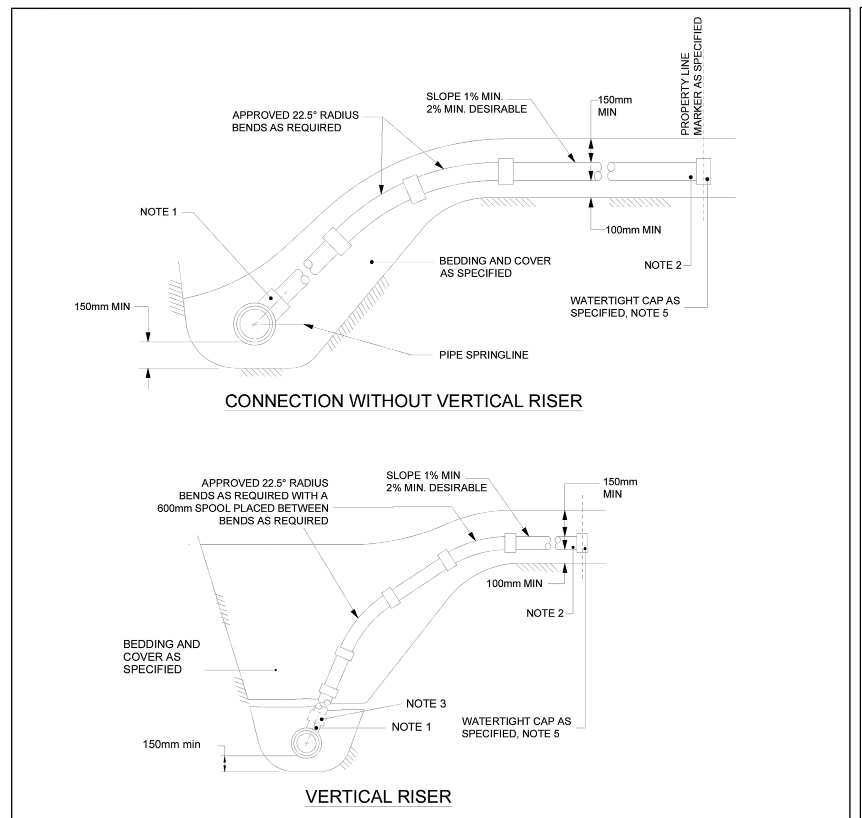

NOTES:

1. DIAMETER OF SERVICE CONNECTIONS SHALL BE NO GREATER THAN 50% OF THE DIAMETER OF THE RIGID SEWER MAIN DIAMETER. THE CONNECTION SHALL BE MADE USING A BELL END INSERT PER S11.2 OR AN APPROVED RUBBER GASKETED INSERT. INVERT OF SERVICE CONNECTION SHALL BE AT THE SAME ELEVATION OR GREATER THAN THE ELEVATION OF THE SPRINGLINE OF THE SEWER MAIN
2. SANITARY SERVICES TO BE 135mm AND STORM SERVICES TO BE 100mm FOR NEW RESIDENCES UNLESS SPECIFIED OTHERWISE.SERVICE PIPE AND RADIUS BENDS TO BE APPROVED CSA B182.2, SDR28 PRODUCTS UNLESS SPECIFIED OTHERWISE
3. APPROVED CONTROLLED SETTLEMENT JOINTS OPTIONAL FOR SERVICE CONNECTIONS TO MAIN SEWERS UP TO 5m DEEP. WHERE APPROVED, CONNECTIONS TO SEWERS OVER 5m DEEP REQUIRE APPROVED CONTROLLED SETTLEMENT JOINTS
4. VERTICAL RISER SHALL BE SAME AS SERVICE PIPE UNLESS OTHERWISE SPECIFIED
5. CAP AT THE PROPERTY LINE SHALL BE ADEQUATELY BRACED TO WITHSTAND TESTING PRESSURE
6. FOR NEW CONSTRUCTION, INSERTS MUST BE INSTALLED ON THE MAIN PIPE BEFORE THAT PIPE IS LAID. FOR SERVICES/BRANCHES 375mm DIA. OR LESS, APPROVED "CORED TEES" MAY BE USED
7. APPROVED CUT-IN TOOL MUST BE USED FOR FIELD MADE CONNECTIONS
8. ALL DIMENSIONS ARE IN MILLIMETRES UNLESS OTHERWISE SHOWN
9. RADIUS BENDS GREATER THAN 22.5° ARE NOT ALLOWED

Ottawa	TITLE: SEWER SERVICE CONNECTIONS FOR RIGID MAIN SEWER PIPE (MODIFIED OPSD-1006.010)	DATE: MAR 2006 / REV: MAR 2024 / DWG No: S11

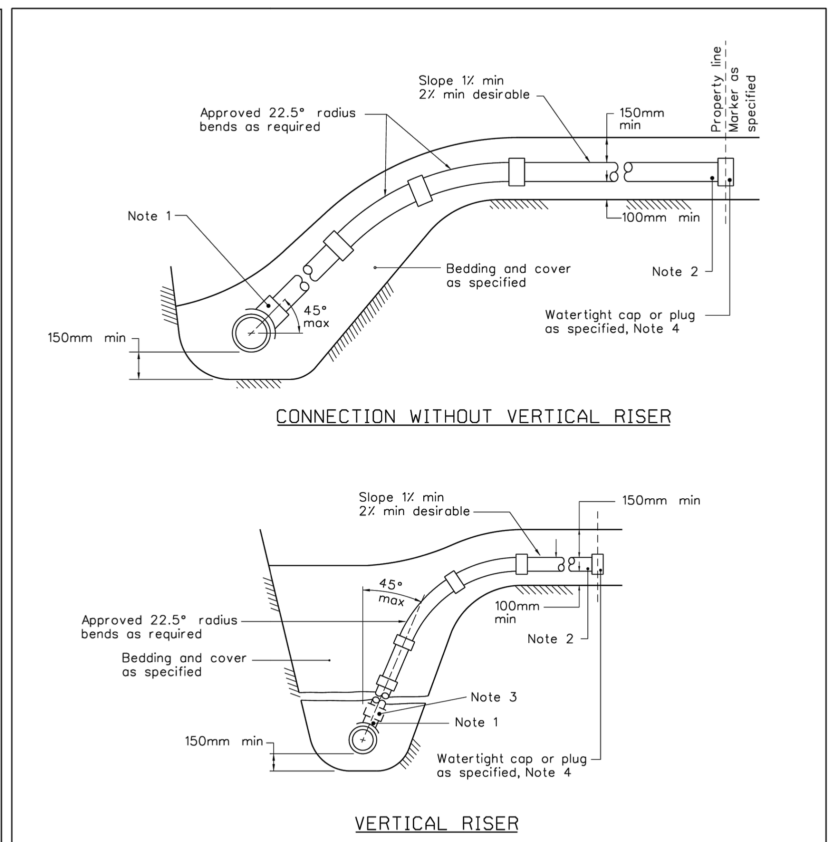

NOTES:

1. ALL DIAMETERS OF SERVICE CONNECTIONS TO FLEXIBLE MAIN SEWER SHALL BE MADE USING APPROVED TEE OR WYE FITTINGS.
2. SANITARY SERVICES TO BE 135mm AND STORM SERVICES TO BE 100mm FOR NEW RESIDENCES UNLESS SPECIFIED OTHERWISE. SERVICE PIPE AND RADIUS BENDS TO BE APPROVED CSA B182.2, SDR28 PRODUCTS UNLESS SPECIFIED OTHERWISE.
3. APPROVED CONTROLLED SETTLEMENT JOINTS OPTIONAL FOR SERVICE CONNECTIONS TO MAIN SEWERS UP TO 5m DEEP. WHERE APPROVED, CONNECTIONS TO SEWERS OVER 5m DEEP REQUIRE APPROVED CONTROLLED SETTLEMENT JOINTS.
4. CAP OR PLUG AT THE PROPERTY LINE SHALL BE ADEQUATELY BRACED TO WITHSTAND TESTING PRESSURE.
5. ALL DIMENSIONS ARE IN MILLIMETRES UNLESS OTHERWISE SHOWN.

Ottawa	SEWER SERVICE CONNECTIONS FOR FLEXIBLE MAIN SEWER PIPE (MODIFIED OPSD-1006.020)	DATE: MARCH 2006 / REV. DATE: MARCH 2013 / DWG. No.: S11.1

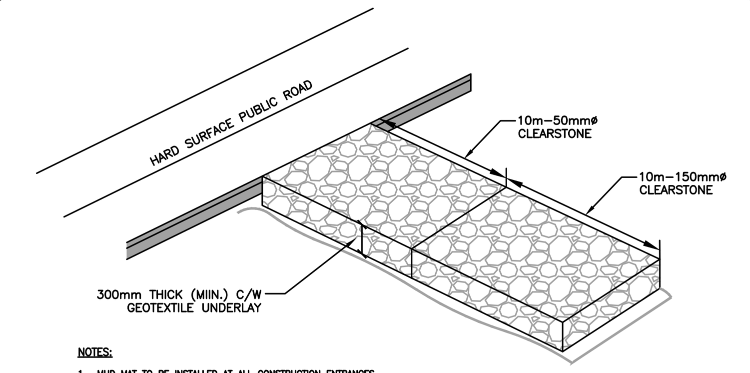

NOTES:

1. MUD MAT TO BE INSTALLED AT ALL CONSTRUCTION ENTRANCES
2. MUD MAT TO EXTEND FULL WIDTH OF ENTRANCE
3. IN THE CASE THAT THE ACCESS CROSSES A CULVERT OR DITCH, SEDIMENT FENCING SHOULD BE INSTALLED ALONG THE EDGES OF THE ACCESS TO PREVENT SEDIMENT FROM BEING WASHED AWAY WITH RUNOFF.
4. THE GRANULAR MATERIAL WILL REQUIRE PERIODIC REPLACEMENT AS IT BECOMES CONTAMINATED BY VEHICLE TRAFFIC.
5. SEDIMENT SHALL BE CLEANED FROM PUBLIC ROADS AT THE END OF EACH DAY.
6. STORM INLETS BOTH ON AND IN THE PROXIMITY OF THE SITE SHALL BE PROTECTED WITH INLET CONTROL MEASURES PRIOR TO ROAD CLEANING ACTIVITIES.

MUD MAT ENTRANCE DETAIL
SCALE: N.T.S.

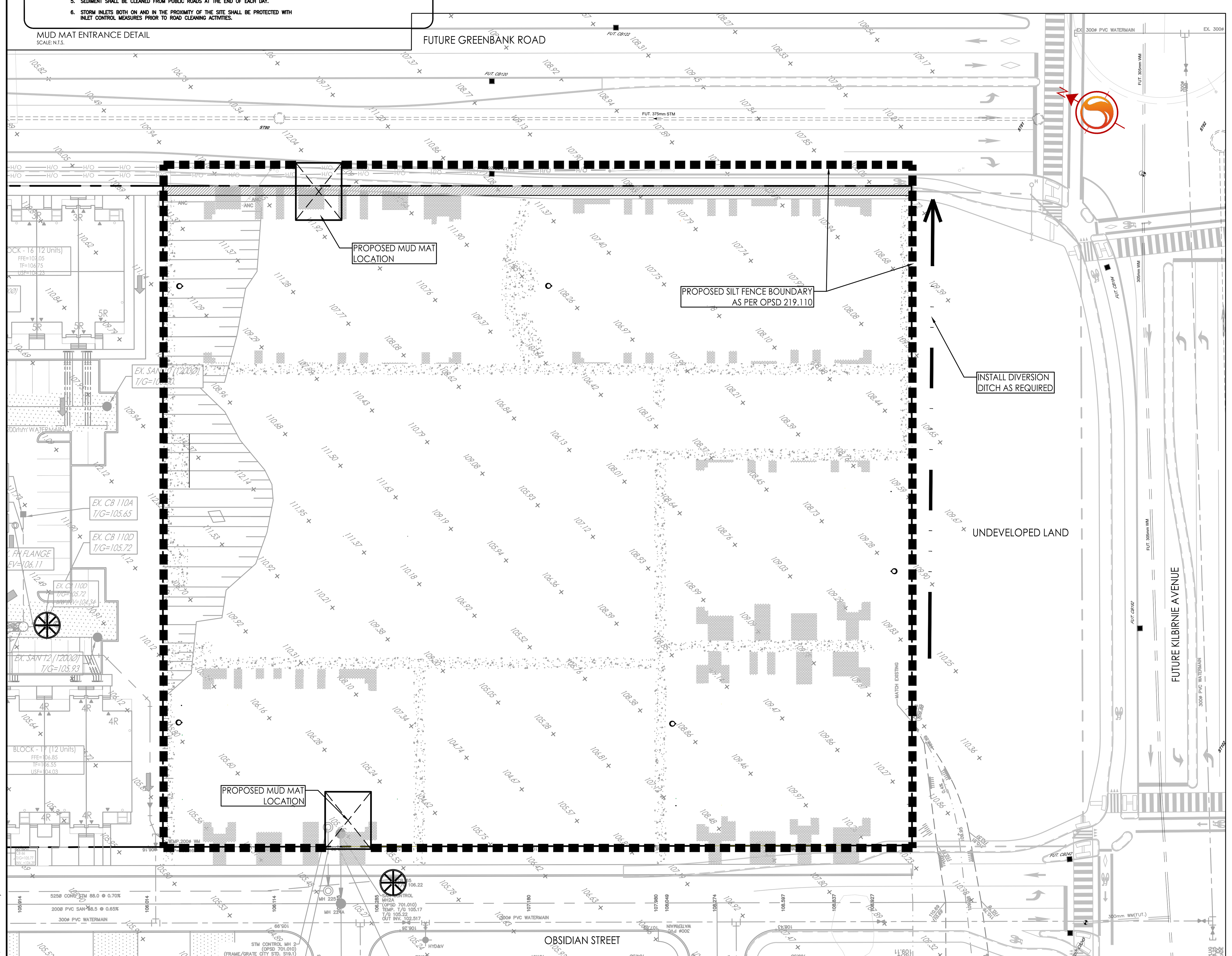

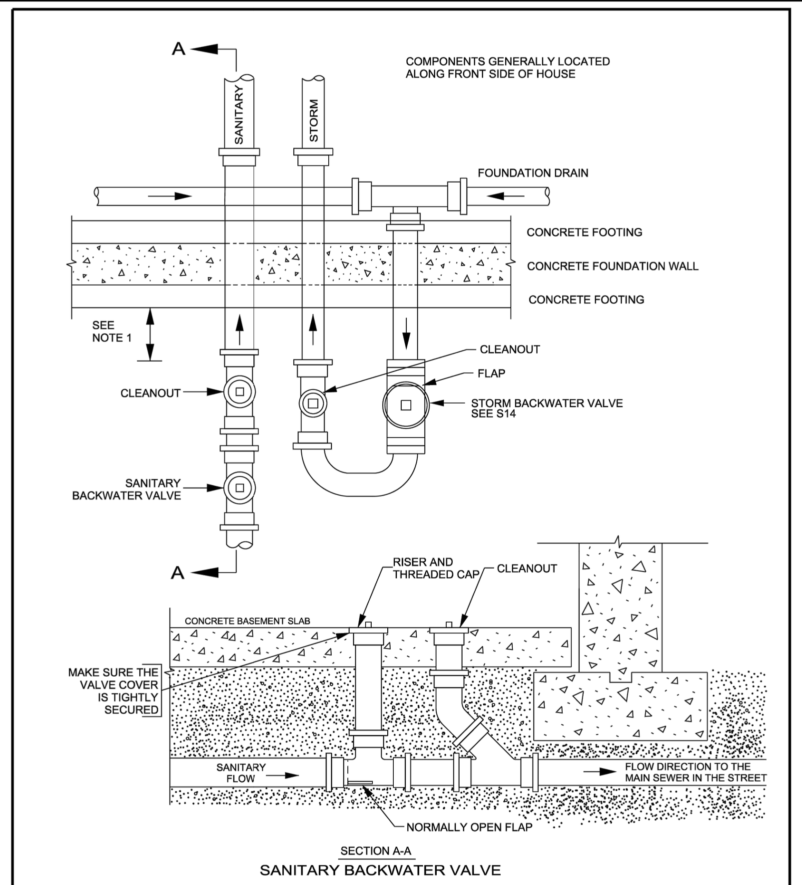

NOTES:

1. BACKWATER VALVE, CLEANOUTS AND ANY OTHER FITTINGS MUST BE INSTALLED A MINIMUM OF 300mm INSIDE OF THE BASEMENT FOOTING. THIS IS TO ENSURE THERE IS SUFFICIENT ROOM TO REPLACE THESE COMPONENTS IN THE FUTURE WITHOUT HAVING TO DAMAGE THE FOOTING/WALL DURING THE PROCESS
2. JOINTS BETWEEN CLEANOUT AND THE BACKWATER VALVE AND THE FLOOR SLAB SHALL BE SEALED.

N.T.S.

Ottawa	SANITARY BACKWATER VALVE INSTALLATION TYPE 2	DATE: MARCH 2011 / REV. DATE: / DWG. No.: S14.2

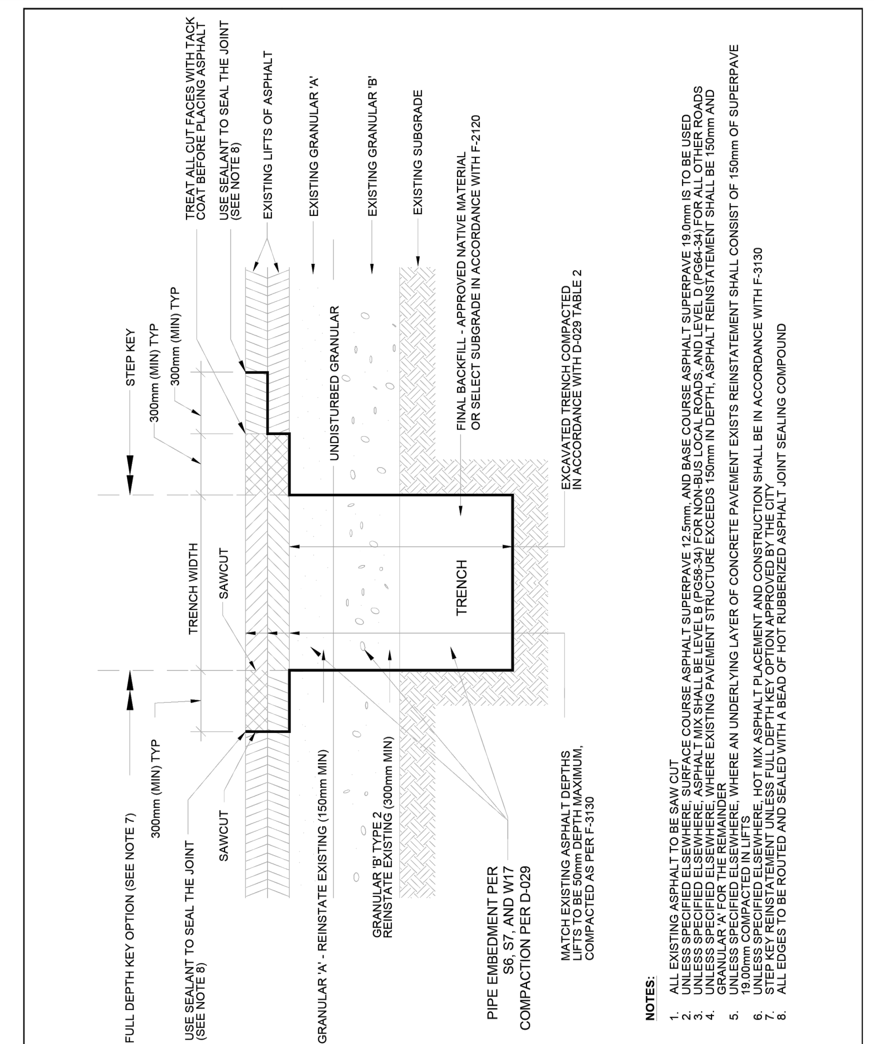

Ottawa	TITLE: STANDARD TRENCH REINSTATEMENT IN PAVED SURFACE	DATE: MAY 2001 / REV: MAR 2023 / DWG No: R10

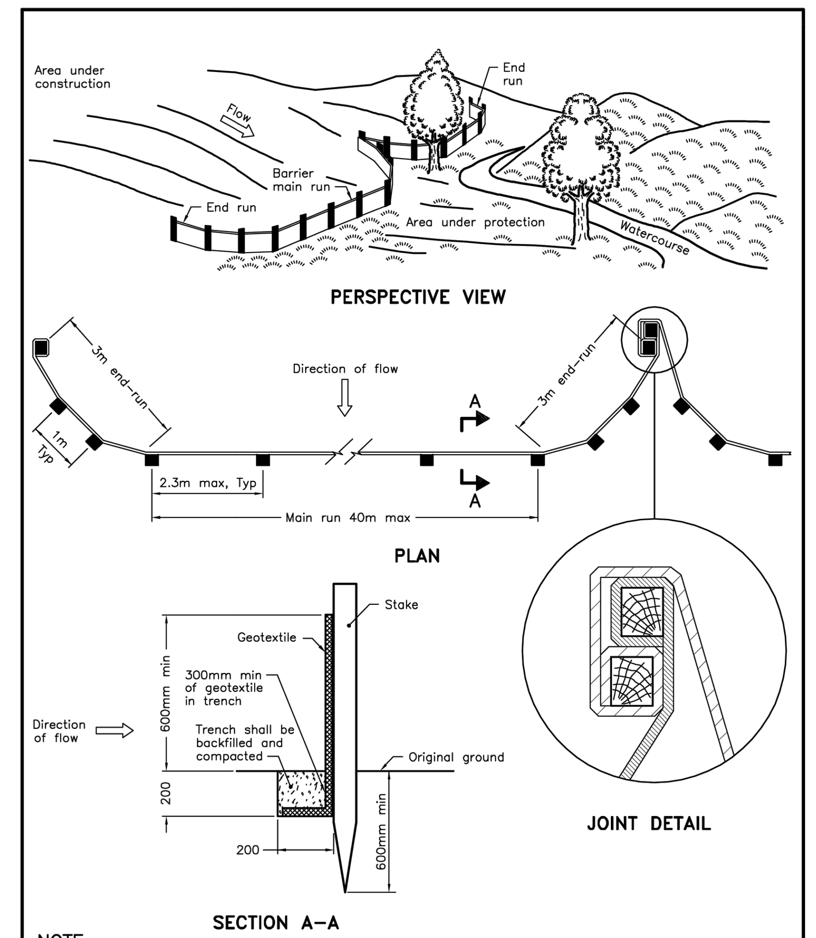

NOTE:
A All dimensions are in millimetres unless otherwise shown.

ONTARIO PROVINCIAL STANDARD DRAWING	Nov 2015	Rev 2
LIGHT–DUTY SILT FENCE BARRIER		OPSD 219.110

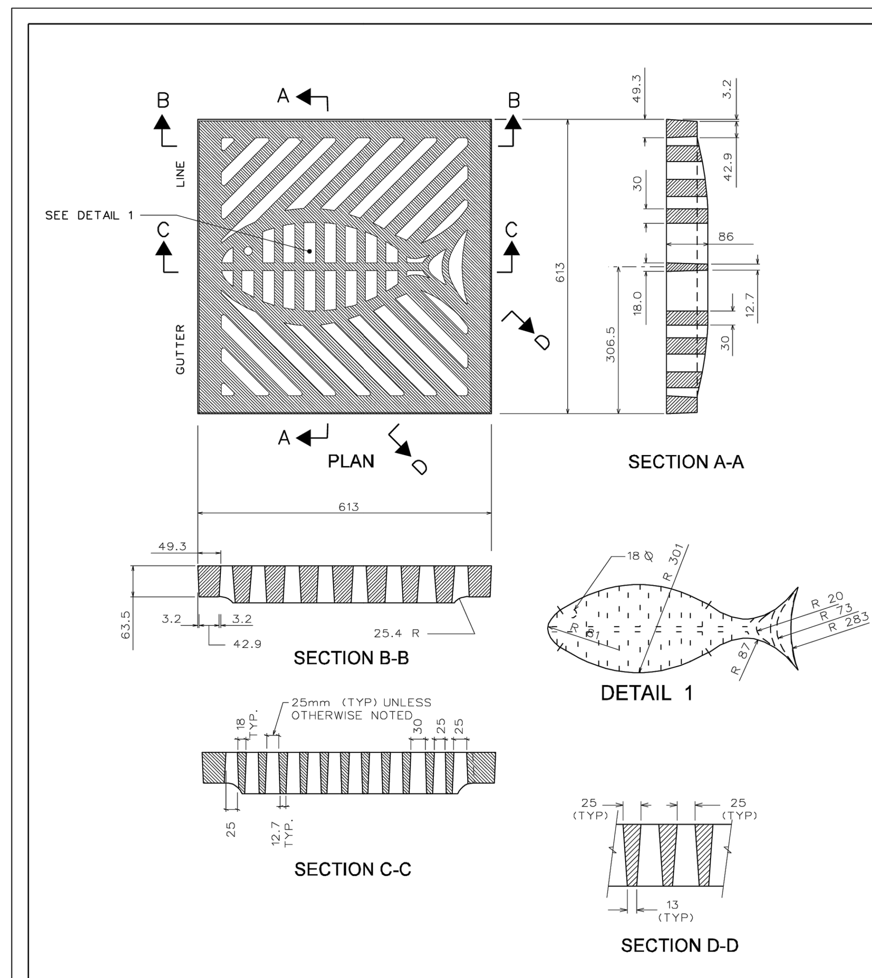

NOTES:

1. ALL DIMENSIONS SHOWN ARE FOR FINISHED CASTINGS ONLY. PATTERN MAKERS AND CASTING SHOP SHOULD MAKE ALLOWANCES ACCORDINGLY.
2. ALL DIMENSIONS ARE IN MILLIMETRES UNLESS SHOWN OTHERWISE.
3. IT IS ESSENTIAL THAT THE COVER BE INSTALLED IN THE DIRECTION OF THE GUTTER LINE AS SHOWN.
4. THE FRAME FOR THIS COVER SHALL BE AS PER OPSD 400.02 WITHOUT THE HINGE SLOT.
5. NOT FOR NEW CONSTRUCTION AFTER 31 DEC. 05, FOR REPLACEMENT OF BROKEN EXISTING ONLY.

Ottawa	HEAVY DUTY "FISH" TYPE SQUARE CATCH BASIN COVER	DATE: MARCH 2005 / REV. DATE: / DWG. No.: S19.1

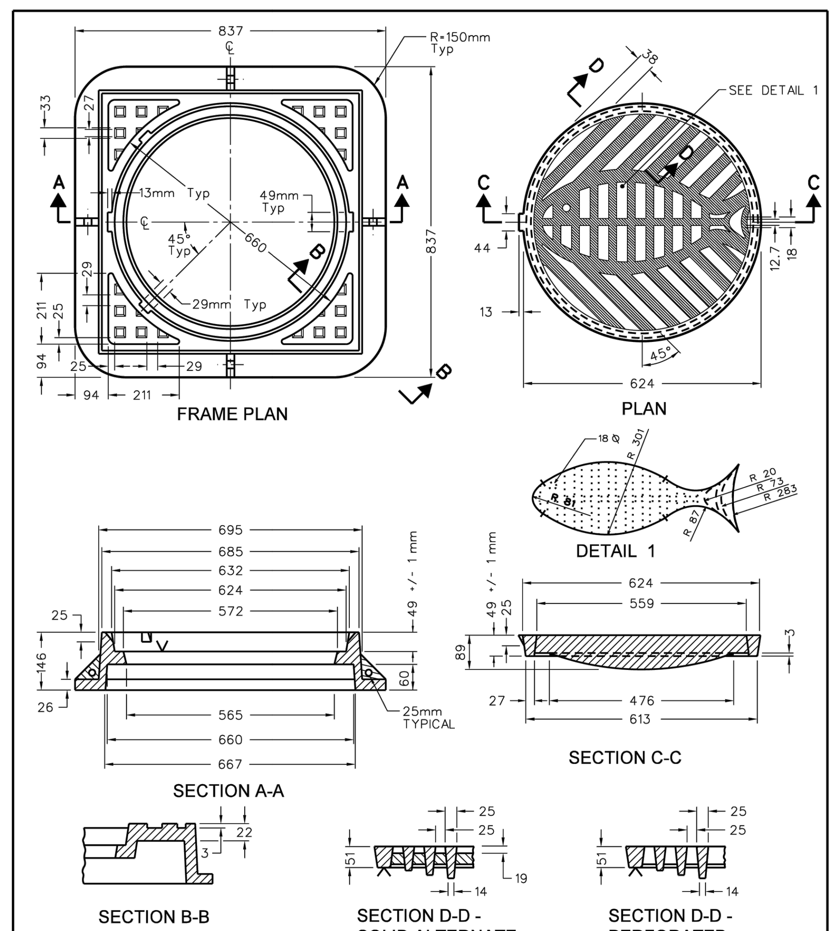

NOTES:

1. ALL DIMENSIONS SHOWN ARE FOR FINISHED CASTINGS ONLY. PATTERN MAKERS AND CASTING SHOP SHOULD MAKE ALLOWANCES ACCORDINGLY.
2. ALL DIMENSIONS ARE IN MILLIMETRES UNLESS SHOWN OTHERWISE.
3. FOR NEW CONSTRUCTION WHERE SURFACE INLETS ARE SPECIFIED.
4. COMPANIES WITH GRATE DIMENSIONS NOT EXACTLY THE SAME AS SHOWN ABOVE WILL ALSO BE CONSIDERED.
5. ALTERNATE SOLID COVER TO HAVE EYE 25mm Dia. HOLE WITH 25mm APPROVED PLUG

Ottawa	HEAVY DUTY "FISH" TYPE ROUND CATCH BASIN COVER (MODIFIED OPSD-400.07)	DATE: MAY 2005 / REV. DATE: MARCH 2017 / DWG. No.: S19

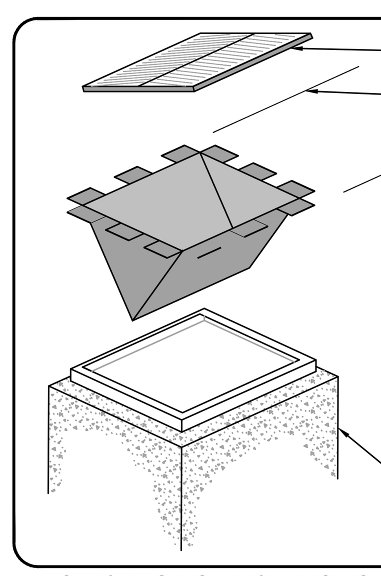

NOTES:

1) TO BE USED UNDER APPROPRIATE DRAINAGE CIRCUMSTANCES, DURING THE CONSTRUCTION PERIOD.
2) SILTSACK SHOULD BE INSPECTED EVERY 2–3 WEEKS AND AFTER EVERY MAJOR STORM.
3) TO BE INSTALLED AND MAINTAINED BY MANUFACTURES RECOMMENDATIONS

ROADSIDE CATCH BASIN PROTECTION DETAIL: TERRAFIX SILTSACK
SCALE: N.T.S.

Stantec

Stantec Consulting Ltd.
400 - 1331 Clyde Avenue
Ottawa ON
Tel. 613.722.4420
www.stantec.com

Copyright Reserved

The Contractor shall verify and be responsible for all dimensions. DO NOT scale the drawing - any errors or omissions shall be reported to Stantec without delay.
The Copyrights to all designs and drawings are the property of Stantec. Reproduction or use for any purpose other than that authorized by Stantec is forbidden.

Legend

- PROPOSED SILT FENCE BOUNDARY AS PER OPSD 219.110
- PROPOSED MUD MAT LOCATION
- PROPOSED CATCH BASIN PROTECTION

Notes

Best Management Practices

CONTRACTOR TO PROVIDE EROSION AND SEDIMENT CONTROLS (BEST MANAGEMENT PRACTICES) DURING CONSTRUCTION OF THIS PROJECT.

EROSION MUST BE MINIMIZED AND SEDIMENTS MUST BE REMOVED FROM CONSTRUCTION SITE RUN-OFF IN ORDER TO PROTECT DOWNSTREAM AREAS. DURING ALL CONSTRUCTION, EROSION AND SEDIMENTATION SHOULD BE CONTROLLED BY THE FOLLOWING TECHNIQUES:

1. LIMIT THE EXTENT OF EXPOSED SOILS AT ANY GIVEN TIME.
2. REVEGETATE EXPOSED AREAS AND SLOPES AS SOON AS POSSIBLE.
3. MINIMIZE AREA TO BE CLEARED AND GRUBBED.
4. PROTECT EXPOSED SLOPES WITH PLASTIC OR SYNTHETIC MULCHES.
5. INSTALL CATCH BASIN INSERTS OR EQUIVALENT IN ALL PROPOSED CATCH BASINS AND CATCH BASIN MANHOLES AND IN ALL EXISTING CATCH BASINS THAT WILL RECEIVE RUN-OFF FROM THE SITE.
6. A SILT FENCE SHALL BE INSTALLED AROUND THE PERIMETER OF ALL AND ANY STOCKPILES OF MATERIAL TO BE USED OR REMOVED FROM SITE. (LOCATION TO BE DETERMINED)
7. A VISUAL INSPECTION SHALL BE DONE DAILY ON SEDIMENT CONTROL MEASURES AND CLEANED OF ANY ACCUMULATED SILT AS REQUIRED. THE DEPOSITS WILL BE DISPOSED OFF SITE AS PER THE REQUIREMENTS OF THE CONTRACT.
8. SEDIMENT CONTROL BARRIERS MAY ONLY BE REMOVED TEMPORARILY WITH APPROVAL OF CONTRACT ADMINISTRATOR TO ACCOMMODATE CONSTRUCTION OPERATIONS. ALL AFFECTED BARRIERS MUST BE REINSTATED AT NIGHT WHEN CONSTRUCTION IS COMPLETED. NO REMOVAL WILL OCCUR IF THERE IS A SIGNIFICANT RAINFALL EVENT ANTICIPATED (>10mm) UNLESS A NEW DEVICE HAS BEEN INSTALLED TO PROTECT EXISTING STORM AND SANITARY SEWER SYSTEMS, OR DOWNSTREAM WATERCOURSES.
9. NO REFUELING OR CLEANING OF EQUIPMENT IS PERMITTED NEAR ANY EXISTING WATERWAY.
10. CONTRACTOR SHALL REMOVE SEDIMENT CONTROL MEASURES WHEN, IN THE OPINION OF THE CONTRACT ADMINISTRATOR, THE MEASURE(S) IS NO LONGER REQUIRED. NO CONTROL MEASURES SHALL BE PERMANENTLEY REMOVED WITHOUT PRIOR WRITTEN AUTHORIZATION FROM THE CONTRACT ADMINISTRATOR.
11. THE CONTRACTOR SHALL PERIODICALLY, OR WHEN REQUESTED BY THE CONTRACT ADMINISTRATOR, CLEAN OUT ACCUMULATED SEDIMENTS AS REQUIRED.
12. THE CONTRACTOR SHALL IMMEDIATELY REPORT TO THE ENGINEER ANY ACCIDENTAL DISCHARGES OF SEDIMENT MATERIAL INTO THE WATERCOURSE. APPROPRIATE RESPONSE MEASURES, INCLUDING ANY REPAIRS TO EXISTING CONTROL MEASURES OR THE IMPLEMENTATION OF ADDITIONAL CONTROL MEASURES, SHALL BE CARRIED OUT BY THE CONTRACTOR WITHOUT DELAY.
13. CONTRACTOR SHALL INSTALL MUD MATS AT ALL ENTRANCES TO THE SITE.

Revision		By	Appd.	YY.MM.DD
4	REVISED PER CITY COMMENTS	JP	SG/DT	26.01.09
3	ADDED WATERMAIN "E"TABLE	JP	SG	25.11.21
2	CLARIFIED GREENBANK ELEVATIONS; REVISED MINTO TIE IN GRADES	JP	SG	25.11.07
1	2ND SUBMISSION FOR SITE PLAN APPROVAL	JP	SG	25.09.05
0	1ST SUBMISSION FOR SITE PLAN APPROVAL	JP	SG	25.05.13

File Name: 160402143-HMBS-PH7-DB	JP	SG	JP	25.04.17
	Dwn.	Chkd.	Dsgn.	YY.MM.DD

Permit-Seal

LICENSED PROFESSIONAL ENGINEER
D. C. THIFFAULT
100186107
2026-01-14
PROVINCE OF ONTARIO

Client/Project
Mattamy Homes

HMB PHASE 7

OTTAWA, ON

Title
EROSION CONTROL PLAN AND DETAIL SHEET

Project No.	Scale	
160402143	1:500 (0 5 15 25m)	
Drawing No.	Sheet	Revision
EC/DS-1	6 of 9	4

D07-12-25-0068

PLAN # 19017

W:\active\160402143\design\drawing\160402143-HMBS-PH7-DB.dwg
2026/01/14 11:48 AM By: Thiffault, Dustin

ORIGINAL SHEET - ARCH D