SPECIFICATIONS

00 -PROCUREMENT AND CONTRACTING REQUIREMENTS

1. This division shall apply to all divisions herein.
2. Provide cost estimates and tenders as required by the Project/Construction Manager. All tenders are to be complete, including all taxes, related permits, fees, etc. and are to be based on complete examination of the drawings, the site, and all conditions established by the Project/Construction Manager and/or the documents. Do not include the main building permit fee or any municipal development charges.
3. Provide complete Schedule of Values upon contract award and revise as required to satisfaction of Project/Construction manager, and payment certifier prior to 1st application for payment.
4. Provide Bonds/Insurance as required by the Project/Construction Manager.
5. Include all labour, Products and services necessary for the performance of the Work.
6. The components of the Contract Documents are complementary, and what is required by any one shall be as binding as if required by all. In case of conflict within the contract documents, order of priority from highest to lowest is as follows: Specifications; Schedules; Drawings (larger scale shall govern over smaller scale of same date; later date shall govern over earlier date of same document; noted materials, annotations and dimensions shall govern over graphic illustrations).
7. Construction Manager/Contractor shall have total control of the Work, effectively direct and supervise the Work to ensure conformity with the Contract Documents, and be solely responsible for construction means, methods, techniques, sequences, and procedures and for co-ordinating the various parts of the Work.
8. The Construction Manager/Contractor shall have the sole responsibility for the design and engineering, erection, operation, maintenance, and removal of Temporary Work.
9. Verify on site all relevant measurements and levels necessary for proper and complete fabrication, assembly and installation of the Work, carefully compare such field measurements and conditions with the requirements of the Contract Documents. Review the Contract documents. Report promptly any contradiction, inconsistency, or omission to the Project/Construction Manager and/or Consultant and obtain written instructions before proceeding.
10. Product/System substitutions may be considered prior to bid and contract award only. Provide substitution request submission with complete information, including direct comparison to product/system identified in Documents, pertinent specifications, reference standards, to demonstrate commensurate performance, finish, durability, etc. and to enable Consultant to determine acceptability of such products. Include in the submission and Bid, all changes required to accommodate such substitutions and complete the Work.
11. The Project/Construction Manager shall review and coordinate submittals, and stamp prior to submitting for review and indicate any deviations from contract documents.
12. Construction Manager/Contractor shall be responsible for or designate subcontractor responsible for complete engineering of delegated design items or assemblies that are comprised of multiple and separate elements which must act in unison to achieve referenced standards, building codes and requirements of authorities having jurisdictions. (for example, where the supply and installation of a guardrail system is called for, include for all support steel, miscellaneous metals, glazing, clips, fasteners, panels and other items as required for engineering of complete assembly and submit shop drawings showing same.)
13. The warranty period under this Contract is one year from the date of Substantial Performance of the Work. Provide extended warranties as called for herein or by the Project/Construction Manager.

01 -GENERAL REQUIREMENTS

1. This division shall apply to all divisions herein.
2. See project description under 'Ontario Building Code matrix', Drawing A001.
3. Time is of the essence in the execution and completion of this work.
4. Co-ordinate with the Project/Construction Manager for phasing of work, over-all construction schedule, and daily over-all protocols.
5. All contractors shall co-ordinate and co-operate with each other. Allow access for any owner's work.
6. All contractors shall consult with the project manager regarding all necessary temporary services and facilities. Notify, project manager, authority having jurisdiction and utility companies of intended interruption of services and obtain required permissions.
7. Where indicated in contract documents provide submittals including shop drawings and product data (in electronic .pdf format and in the same units of measurement as the contract documents), samples (physical sample) in duplicate, and/or provide mockups. Where Engineered submittals are required, such shop drawings to be sealed by an engineer experienced in such work and licensed to practice in the province of Ontario. Revise submittals as may be required per Consultant review. Do not proceed with work affected by submittal until review is complete.
8. Perform work in accordance with Ontario Building Code (OBC) including amendments up to date of building permit issuance, and other codes of provincial or local application. In case of conflict or discrepancy, more stringent requirements apply.
9. Conform to reference standards indicated in contract documents. Where reference standards are not indicated, standard of quality equal to or better than the related standard specification requirements of products, systems or work identified in the contract documents. Where such products or systems are identified only by technical or trade names, standard of quality equal to or better than recognized well known meanings.
10. Meet or exceed requirements of contract documents, specified standards, codes and referenced documents.
11. Workmanship shall be to the highest standard for each respective trade. Erect all work accurately, square, secure, plumb, straight, true and to accepted tolerances. Provide and comply with manufacturer's printed instructions. Carry on work only in weather, temperature or environmental conditions acceptable to industry standards. Make good all existing conditions as required for a complete job. Clean all work and work areas on an ongoing basis.
12. Consider location of fixtures, outlets, and mechanical and electrical items indicated as approximate, unless specifically noted otherwise, and take care to maintain intent, such as alignment with adjacent items, centering or spacing within related element or space.
13. Provide metal fastenings and accessories in same texture, colour and finish as adjacent materials, unless indicated otherwise.
14. Prevent electrolytic action between dissimilar metals and materials.
15. Use non-corrosive hot dip galvanized steel fasteners and anchors for securing exterior work, unless stainless steel or other material is specifically requested in affected specification Section.
16. Execute work to prevent damage to portions of existing work which remain, repair portions of existing work which have been altered during construction to match existing or adjoining work, condition to be equal to or better than existing. For continuous surfaces re-finish to nearest intersection; for an assembly, re-finish entire unit.
17. Protect all work from damage. Keep all materials secure. Erect shoring, hoarding, fencing, barriers and scaffolding as required.
18. Prevent overloading of parts of building. Do not cut, drill or sleeve load bearing structural member, unless specifically indicated, without written approval of Engineer.
19. Inspect existing conditions, including elements subject to damage or movement during cutting and patching. Provide supports to assure structural integrity of surroundings. Provide devices and methods to protect other portions of project from damage.
20. At penetration of fire rated wall, ceiling, or floor construction, completely seal voids with firestopping material, full thickness of the construction element as required to maintain fire resistance rating.
21. Provide final cleaning in accordance with Project/Construction Manager requirements.
22. Sort materials for reuse and recycling. Dispose of removed or waste materials, to appropriate recycling or disposal facilities except where indicated otherwise (e.g. for re-use) in accordance with requirements of authority having jurisdiction.
23. Reserved
24. Refer to Geotechnical Report PG3257-LET –01 from Patterson Group, dated June 17, 2014. Coordinate provision of required and recommended review of subsurface conditions as they pertain to construction scope.

02 -EXISTING CONDITIONS

1. Reserved
2. Should material resembling spray or trowel-applied asbestos, or other designated substance listed as hazardous be encountered, stop work, take preventative measures, and notify project manager immediately.]
3. Reserved.
4. Protect all existing structure and utilities. Contact all requisite municipal and utility authorities for locates. Disconnect and re-route services as required to accommodate demolition and new construction. Carry out work to Authorities approval.
5. Reserved.
6. Replace and/or repair any damage to public or private property caused by this contract at no expense to the owner.

03 -CONCRETE

1. Refer to Structural, Civil Engineering, and Landscape Architecture for Drawings, Specifications and Details.
2. Reference Standards:
   2.1.CSA A23.1/A23.2-19, Concrete Materials and Methods of Concrete Construction/Methods of Test and Standard Practices for Concrete.
   2.2.CSA A283-06/R2016 Qualification Code for Concrete Testing Laboratories.
3. Cooperate with any trade applying finishes to concrete surfaces and provide surfaces which will ensure adequate bond. Provide chases and reglets where required.
4. Provide final finish as indicated and to selection of Project/Construction Manager.
5. Power steel trowel finish for interior exposed slabs, slabs which receive resilient flooring, epoxy-based finishes, thin set tiles, and future floors. Steel trowel floated surface.
6. Provide hardened concrete where directed by the Project/Construction Manager: W.R. Meadows Seal Tight 'Liqui-Hard'or equivalent, follow manufacturers written instructions for dosage and application procedure.
7. Surface tolerance: Comply with tolerances required by Ontario Building Coded; finish slabs to provide positive slopes to drains without ponding; conform to finish tolerance class A unless otherwise noted.
8. Provide construction and control joints in accordance with reference standard, as required by structural, and: locate joints on column lines and with equal spacing between unless indicated otherwise, do not create 'L'shaped panels nor 'T' shaped joint intersections.

04 -MASONRY

1. N/A

05 -METALS

1. Provide miscellaneous metals, lintels and other members for framing, complete steel stairs, handrails and guardrails, and where indicated and required to support construction.
2. Be responsible for the structural design of miscellaneous metals, include for all: galvanizing, bearing capacities, spans, spacing, member sizing, fasteners loads, deflection, etc. Provide shop drawings of all items for review by the consultants.
   2.1.Provide engineering to meet design and comply with applicable building code requirements, including design to withstand lateral guard loads or other imposed loads indicated in construction documents and submit shop drawings showing same, sealed by structural engineer licensed to practice in the province of Ontario.
   2.2.All elements shall comply with all applicable materials and methods tests and standards, which shall be listed on the shop drawings.
   2.3.Refer to and coordinate with requirements of 00 Procurement and Contracting, 01 General Requirements, and pertinent divisions for related work such as: 08 Openings (e.g. Glass and accessories for guardrails) or 13 Special Construction (e.g. pre-engineered building components).
   2.4.Provide inspections during construction and final certification by the responsible engineer that the installation has been completed in accordance with the approved shop drawings.
3. Reference Standards:
   3.1.CSA G40.20-13/G40.21-13(R2018), General Requirements for Rolled or Welded Structural Quality Steel/Structural Quality Steel.
   3.2.CAN/CSA G164-18, Hot Dip Galvanizing of Irregularly Shaped Articles.
   3.3.CSA S16-14(R2019) , Design of Steel Structures.
   3.4.CSA W48-18, Filler Metals and Allied Materials for Metal Arc Welding.
   3.5.CSA W59-18, Welded Steel Construction (Metal Arc Welding).
4. Supply and install all miscellaneous metal as shown on the drawings. Shop-primed for Interior work, Galvanized for Exterior work unless noted otherwise. Touch-up welds in the field (primer and zinc rich paint for galvanized work).
5. Fabricate work square, true, straight and accurate to required size, with joints closely fitted and properly secured.
6. Exposed welds continuous for length of each joint. File or grind exposed welds smooth and flush.
7. Metal siding and roofing: refer to 07 –Thermal and Moisture Protection.
8. Steel stud exterior walls & interior partitioning see 09 –Finishes.

06 -WOODS & PLASTICS

1. Reserved
2. Plywood, OSB and wood based composite panel construction sheathing identification: by grademark in accordance with applicable CSA standards.
3. Galvanizing: to CAN/CSA-G164, use galvanized fasteners for exterior work, interior highly humid areas, pressure-preservative, and fire-retardant treated lumber.
4. Wood preservative pressure treatment (PT): to CSA-O80 Series. Treat end cuts with compatible end cut preservative.
5. All built-in wood blocking, curbs, grounds, nailers, rough bucks, etc. to be built of pressure-treated lumber or plywood where exposed to moisture. Apply wood preservative to all cut surfaces.
6. Supply & install rough and finished carpentry as required for a complete project, including all framing, plywood, sheathing, strapping, furring, meter equipment boards, doors and trim, sub-flooring, cabinetry & millwork, etc. Comply with requirements of OBC, supplemented by the following paragraphs.
   6.1.Install nails, screws, bolts and sundry anchors as required for sound construction. Use approved non-corrosive fasteners wherever there is the possibility of staining or corrosion.
   6.2.Install furring and blocking as required to space-out and support casework, cabinets, wall and ceiling finishes, facings, fascia, soffit, siding and other work as required.
   6.3.Align and plumb faces of furring and blocking to tolerance of 1:600.
   6.4.Install rough bucks, nailers and linings to rough openings as required to provide backing for frames and other work.
7. Reserved
8. Finish carpentry and architectural woodwork:
   8.1.N/A

07 -THERMAL & MOISTURE PROTECTION

1. Dampproofing and Waterproofing:
   1.1.Verify with Geotechnical Engineer the subsurface conditions, drainage and hydrostatic pressure, provide weep drainage network to remove subgrade moisture, dampproofing and waterproofing capable of resisting of resisting hydrostatic pressure.
   1.2.Provide dampproofing below grade on exterior side of all foundation walls below grade, except where indicated otherwise, and where recommended by the Geotechnical Engineer:
      1.2.1. For ambient and substrate temperatures below 5°C: Penetrating asphalt primer to CGSB 37-GP-9MA-1993; Cut-back Asphalt to CAN/CGSB 37.16-M89
      1.2.2. For ambient and substrate temperatures above 5°C: Mineral Colloid Asphalt Emulsion to CAN/CGSB 37.2-M88
      1.2.3. Sealing compound, rubberized asphalt: to CAN/CGSB 37.29-M88 and as recommended by manufacturer.
      1.2.4. Include for items such as primers, sealers or any other products required for a complete job and as required by the manufacturer's written instruction.
      1.2.5. Standard of Acceptance: Hydrotech 6125 Hot-applied Monolithic rubberized-asphalt membrane or approved equal.
   1.3.Project/Construction Manager to coordinate with Contract Documents for independent inspection and testing company to monitor installation compliance with Contract Documents.
2. Insulation:
   2.1.Board Insulation to CAN/ULC-S701 standard of acceptance (or approved equal):
      2.1.1.1.Below grade on foundations and under slabs-on-grade: XPS: Dow 'Styrofoam SM',
      2.1.1.2.Below grade under traffic bearing surfaces and where indicated: XPS: Dow 'Styrofoam Highload'60 or as indicated by Stuctural or Civil Engineer or Landscape Architect.
      2.1.1.3.Above grade at vertical conditions: XPS Dow 'Styrofoam Cavitymate'.
      2.1.1.4.Roof Insulation and Tapered Roof Insulation: EPS: Plasti-Fab 'PlastiSpan'or Soprema 'Sopra-Iso'
   2.2.Blanket Insulation CAN/ULC-S702 standard of acceptance (or approved equal):
      2.2.1. Thermal: mineral fibre: Rockwool 'ComfortBatt'
      2.2.2. Fire Resistance & Acoustical: mineral fibre: Rockwool 'ComfortBatt'
      2.2.3. Firestopping: mineral fibre: Rockwool 'Comfortboard FS'
      2.2.4. Thermal (and Fire Resistance & Acoustical): mineral fibre: Rockwool 'ComfortBatt'
   2.3.Premanufactured Metal Composite Panel system Insulation: Refer to CANAM (Manufacturer) Drawings
   2.4.Foamed-in-place (cavity, gap and joint sealant) Insulation to CAN/ULC S705.1 standard of acceptance (or approved equal):
      2.4.1. 2 Component spray polyurethane including primers: in accordance with manufacturer's recommendations for surface conditions: Dow 'Froth-Pak'
   2.5.Installation:
      2.5.1. Insulate where indicated on or reasonably inferable from the drawings as necessary for a complete job.
      2.5.2. Comply with manufacturer's written instructions, including product technical bulletins, product catalogue installation instructions, product carton installation instructions, and data sheets.
      2.5.3. Install insulation after building substrate materials are dry.
      2.5.4. Install insulation to maintain continuity of thermal protection to building elements and spaces.
      2.5.5. Board Insulation: Butt joints tightly, offset vertical joints. Use only insulation boards free from chipped or broken edges. Offset vertical and horizontal joints in multiple layer applications. Fit insulation tight around electrical boxes, plumbing and heating pipes and ducts, around exterior doors and windows and other protrusions.
      2.5.6. Batt Insulation: Do not compress insulation to fit into spaces Fit insulation closely around electrical boxes, pipes, ducts, frames and other objects in or passing through insulation.
      2.5.7. Spray Foam Insulation: Apply to clean surfaces and in strict accordance with manufacturer's recommendations and printed instructions.

07 -THERMAL & MOISTURE PROTECTION CONTINUED

3. Reserved
4. Air / Vapour Barriers:
   4.1.Below Grade Vapour barrier: to ASTM E1745-17, Class A, 0.38 mm (15 mils), ≤0.010 perms, standard of acceptance (or approved equal):
      4.1.1. Stego Industries 'Stegor Wrap Vapour Barrier'
      4.1.2. W.R. Meadows 'Perminator'
      4.1.3. Provide vapour barrier joint tape, penetration flashings, and sealants as per manufacturers installation requirements
      4.1.4. Install in accordance with manufacturer written instructions and ASTM E1643-18a: Ensure installation is continuous and vapour tight, extend and seal to perimeter of slab and penetration conditions. Use sheets of largest practical size to minimize joints, lap minimum 100 mm (4"). Inspect for continuity. Repair punctures and tears with sealing tape before work is concealed.
   4.2.Sheet Vapour Barrier: polyethylene film: to CAN/CGSB-51.34, 0.15 mm(6 mils):
      4.2.1. Use sheets of largest practical size to minimize joints. Inspect for continuity. Repair punctures and tears with sealing tape before work is concealed.
      4.2.2. Lap and seal perimeter of sheet vapour barrier over continuous bead of sealant applied to substrate at perimeter of sheets. Lap adjoining sheet minimum 150 mm (6") and press into sealant bead over solid backing at joint. Seal electrical switch and outlet device boxes that penetrate vapour barrier to pre-moulded box vapour barrier.
   4.3.Air Barriers:
      4.3.1. All exterior wall or roof assemblies shall be constructed to resist air leakage caused by static air pressure, including windows, doors, roof hatches, skylights, construction, control and expansion joints, junctions between different assemblies, around any penetrations, and any other interruptions to the integrity of the wall of roof assemblies.
      4.3.2. To CAN/ULC-S741, air permeance not greater that 0.01 L/(s · sq.m.) @75 Pa, standard of acceptance (or approved equal): Dupont 'Tyvek Commercial Wrap'
      4.3.3. Install barrier in such a manner that wall or roof, ensure correct side facing up and laid horizontally or perpendicular to roof slope, such that it forms a continuous membrane over the entire area, allowing any water to drain down to the through flashings without blockages that would prevent or obstruct the water flow.
      4.3.4. Install successive layers in a shingling manner, maintaining minimum 6"horizontal and vertical overlaps. Do not place vertical laps above windows.
      4.3.5. Tape all vertical and horizontal seams.
      4.3.6. Connect to flashings and air barriers in adjacent areas, including as installed by others. Ensure correct overlap between sheets and adjacent membranes (e.g. top edges below materials above) and provide positive seal with seam tape and/or adhesives for a continuous air barrier.
      4.3.7. Protect all air barriers from damage during construction. Patch or repair any damages as per the manufacturer's written instructions before covering up.
   4.4.Self Adhered (SA) Waterproof Underlayment standard of acceptance (or approved equal):
      4.4.1. Roof Applications: Blueskin Roof RF 200 Ice & Water Barrier, by Henry | Bakor
      4.4.2. Transitions (openings in wall): Blueskin WB Window and Door Flashing, by Henry | Bakor
      4.4.3. Flashings: Blueskin TWF-Thru Wall Flashing, by Henry | Bakor
   4.5.Premanufactured Metal Composite Panel System Air and Vapour Barriers: Refer to CANAM (Manufacturer) Drawings
   4.6.Provide manufacturer recommended components and accessories as required to accommodate condition and substrate for a complete system, including but not limited to: fasteners, seals; seam tape, detail tape adhesives, sealants, primers, etc.
5. Insulated Metal Composite Wall Panels
   5.1.Premanufactured Metal Composite Panel System : Murox CI R31 Wal Panel, Refer to CANAM (Manufacturer) Drawings
   5.2.Products, profiles and colors as indicated and/or confirmed the Project Manager.
   5.3.All exterior wall or roof assemblies shall be constructed to resist air leakage caused by static air pressure, including windows, doors, roof hatches, skylights, construction, control and expansion joints, junctions between different assemblies, around any penetrations, and any other interruptions to the integrity of the wall of roof assemblies.
   5.4.Project/Construction manager will conduct a pre-installation meeting attended by the project manager, manufacturer's technical representative, panel installer and contractors of any related trades shall be held at the site job site to coordinate the structural support requirements in relation to the insulated wall panel system, installation of any separate air/water barrier, treatment of fenestration, and other requirements specific to this project.
   5.5.Submit engineered shop drawings for approval showing the profile of the panels, the gauges of both the exterior and interior sheets, location, layout, and dimensions of panels, location and type of fasteners, shape and method of attachment of all trim, location and types of sealants, installation sequence, coordination drawings, which consist of elevations and building sections which show panels in relationship to required locations and attachments to the structural supports, and details including window and door head, sill, jamb, parapet or other transition details that may be required for a weather tight construction.
   5.6.Transportation, storage, handling, installation, of insulated metal wall panels to be carried out in accordance with the manufacturer's written instructions.
6. Reserved
7. Mod Bit Roofing:
   7.1.Submittals:
      7.1.1. Provide most recent technical roofing components data sheets describing materials' physical properties and include product characteristics, performance criteria, physical size, finish and limitations.
      7.1.2. Provide Shop drawings: Indicate curb, parapet, flashing, control joints, expansion joints, tapered insulation, roof drain and other penetration details.
      7.1.3. Submit roofing manufacturer's warranty and design criteria, design calculation for wind uplift loads: Submit under seal, calculations prepared by the professional engineer responsible for the preparation of the engineered shop drawings that clearly indicate the following:
         7.1.3.1.Design assumptions.
         7.1.3.2.Codes and standards to which calculations are based upon.
         7.1.3.3.Materials, maximum and minimum tolerances for proposed materials including anchors and spacing.
         7.1.3.4.Testing data to substantiate compliance with wind (uplift) design requirements.
   7.2.Deliver, store and handle materials in accordance with manufacturer's written instructions.
   7.3.Provide Manufacturer's field reports. Project/Construction Manager shall make arrangements for independent inspection and testing company to monitor installation compliance with Contract Documents.
   7.4.12 months warranty period is extended to: 24 months: CRCA and/or OIRCA warranty for labour, materials, and workmanship; 20 year total system warranty.
   7.5.Performance, Design Criteria, and Quality of work:
      7.5.1. Prevent water from entering building or roof assembly through roofing membrane.
      7.5.2. Compatibility between components of roofing system is essential. Provide written declaration that materials and components, as assembled in system, meet this requirement.
      7.5.3. Roofing System: to CSA A123.21 for wind uplift resistance.
      7.5.4. Do examination, preparation and roofing Work in accordance with Contract Documents, requirements of jurisdictions having authority, Roofing Manufacturer's printed directions and CRCA Roofing Specification Manual, which shall establish minimum requirements not otherwise specified.
   7.6.Roofing assembly components by one manufacture, standard of acceptance 2-ply SBS Modified Bitumen by Soprema (or approved equivalent):
      7.6.1. Self-adhesive SBS modified bitumen vapour retarder in accordance with CAN/CGSB 51.33-M89, demonstrating a typical moisture vapour transmission rate of 0.5 perms according to ASTM E 96. End laps to be minimum 6"; side laps to be minimum 3".
      7.6.2. 1/4" thick asphalt-based protection board over insulation to provide a torch-safe surface. Protection board to be fully-adhered using a compatible polyurethane adhesive.
      7.6.3. Sump all roof drains by using tapered insulation fibreboard. Sumps for a 48" x 48" perimeter.
      7.6.4. Base Sheet: Soprema Sopraply Base 520 torched into place. Heat weld side laps as per manufacturer's written instructions.
      7.6.5. Torch-on cap sheet Soprastar Flam HD GR.
      7.6.6. 2-ply modified bitumen flashing at all perimeters, penetrations and all building expansion joints. Seal roofing to wall air/moisture barrier membranes with a self-adhesive flexible waterproofing membrane. De-granulate cap sheets to allow for adhesion of waterproofing membrane.
      7.6.7. Provide all primers & accessories as required by the manufacturer's written instructions.
   7.7.De-granulate membrane at end laps, allow for min. 6" overlap. Provide 1/4" bitumen bleed-out at membrane seams.
   7.8.Supply & install new plumbing stacks, tall cones, pitch pockets and roof drains with copper inserts, U-flow seals and baskets.
   7.9.Fabricate and install new 26-gauge pre-finished metal flashing throughout perimeter and curbs.
8. Reserved

07 -THERMAL & MOISTURE PROTECTION CONTINUED

9. Firestopping
   9.1.Coordinate with all sections of work including Divisions 21, 22, 23 and Divisions 26, 27, and 28.. Submit product data sheets and shop drawings for each project location required. Include listing agencies detailed drawings showing joint assemblies and firestopping materials, identified with listing agencies name and number or designation, fire rating achieved and date of listing.
   9.2.Provide Engineered Shop Drawings for Engineering Judgements for project specific fire-stopping conditions as required where an applicable listed firestopping system detail cannot be found. Engineering Judgements shall clearly identify the project name and address and shall indicate the fire-resistance rating of the given system.
   9.3.Submit installation certificate that all joint firestopping systems installations are complete and all installations comply with listed design systems.
   9.4.Supply and Install firestopping materials and systems with fire resistance rating not less than fire resistance rating of applicable adjacent assembly, listed in accordance with CAN/ULC-S115-11, and not to exceed opening size for which they are intended, and conform to local governing codes having jurisdiction.
   9.5.Install firestopping and smoke seal systems in accordance with manufacturers written requirements and in compliance with listed system design.
   9.6.Firestop all floor, wall, or partition fire separations at all penetrations, roof decks, beams, joists, flanking walls, etc. with ULC approved materials and systems. Generally: no gap to be greater than 50 mm (2").
   All gaps less than 16 mm (5/8") -caulk; all gaps greater than 5/8", empty compressed mineral wool fill and approved sealing materials both sides.
10. Joint Sealants
   10.1. Provide product date sheet, samples and mockup as requested by Project Manager.
   10.2. Provide joint sealants, primer(s) and backings that are compatible with one another and with joint substrate under conditions of service and application as demonstrated by joint sealant manufacturer based on proven test results and field experience.
   10.3. Colours: shall match colour of predominant adjacent material as selected and approved by Project Manager and selected from manufacturers standard range.
   10.4. Products:
      10.4.1. Exterior movement and non-movement joint: Silicone One Part:
         10.4.1.1.Dow Corning 790 Silicone Building Sealant
         10.4.1.2.Tremco, "Spectrum 1"
      10.4.2. Interior movement and non-movement joint: Acrylic Latex One Part:
         10.4.2.1.Tremco, "Tremflex 834"
      10.4.3. Acoustical Sealant, including sealant for polyethylene vapour barriers: One Part, non-skinning, flexible, sound dampening synthetic rubber sealant:
         10.4.3.1.Tremco, "Tremco Acoustical Sealant".
      10.4.4. Tire Rated Applications: Acrylic Latex sealant designed for use in approved fire stop applications including joints and through penetrations, to: CAN/ULC-S101 and CAN/ULC-S115 and listed firestopping detail:
         10.4.4.1.Tremco, "Tremstop Acrylic"
      10.4.5. Joints at perimeter of plumbing fixtures (e.g. sinks, tubs, urinals, water closets, vanities) and millwork adjacent to same: Silicones One Part, mildew resistant:
         10.4.5.1.Tremsil 200'
         10.4.5.2.Dow Corning '786'
      10.4.6. Primers: as recommended by the sealing manufacturers.
   10.5. Comply with manufacturers' recommendations and directions for installation and application of product being used and:
   10.6. Clean and prime joint where necessary, install joint filler (backer rod) to achieve correct joint depth and shape, with approximately 30% compression pack spaces deeper than 13mm (1/2") and wider than 6mm (1/4") with closed-cell polyethylene rod filler.
   10.7. Form surface of sealant with full bead, smooth, free from ridges, wrinkles, sags, air pockets, embedded impurities. Tool exposed surfaces before skinning to give slightly concave shape.

08 -OPENINGS

1. Submit product data, shop drawings & schedules of all items herein for Consultant's review.
2. Metal Door and Frames
   2.1.Supply and install all pressed-steel frames and hollow-metal doors, and glazing as indicated on drawings., complete with all trims, hardware, etc. as required for a complete job. Provide power door operators and controls, including frame and door preps and all low-voltage wiring as required to meet accessibility requirements where shown on the drawings.
   2.2.Pressed-steel frames to be fully-welded 16-gauge, Galvaneal (A40), zinc-coated steel, ready for paint. Frames for exterior doors to be thermally broken and filled with spray foam insulation.
   2.3.Hollow-metal doors to be 18-gauge, Galvaneal (A40) zinc-coated steel, ready for paint. All exterior doors to be insulated. Exterior doors to include weather-stripping & door sweeps.
   2.4.Supply and install all pressed steel frames and hollow metal doors as indicated on drawings and in accordance with NAAMM-HMMA 840-17.
   2.5.Supply and Install Fire labelled doors and frames fabricated and installed to NFPA 80.
3. Aluminum Doors and Frames and Windows:
   3.1.Supply and install all Aluminum Doors and Frames, Windows, and glazing as indicated on drawings., complete with all trims, hardware, etc. as required for a complete job. Provide power door operators and controls, including frame and door preps and all low-voltage wiring as required to meet accessibility requirements where shown on the drawings.
   3.2.Isolate all aluminum from concrete, masonry or dissimilar metals.
4. Reserved
5. Access / Overhead / Specialty Doors and Frames:
   5.1.Supply and install all Overhead Doors as indicated on drawings in accordance with manufacturers written instructions.
   5.2.Provide complete with all trims, hardware, etc. as required for a complete job including, weather-stripping & door sweeps.
6. Reserved
7. Reserved
8. Hardware:
   8.1.Supply all hardware as per the "Door/Frame/Hardware" schedule. Submit detailed D/F/H schedule and cut sheets for Project Managers and Consultant's review. Provide key systems & keys as required by the Project Manager.
9. Glazing
   9.1.Supply and install all Glazing for doors, windows, sidelights, guardrails, mirrors and other items as indicated on drawings.
   9.2.Insulating glass units: as indicated, to meet the projects compliance requirements for energy efficiency as indicated in the projects Ontario Building Code Supplementary Standard SB-10; and to CAN/CGSB-12.8, minimum:
      9.2.1. Double glazed unit, 25 mm (1") overall thickness. , minimum:
      9.2.2. Glass: 6 mm (1/4") thick minimum, CAN/CGSB 12.3-M91, Glazing Quality.
      9.2.3. Inter-cavity space: 12 mm (1/2"), 90% argon/10% air filled, with low conductivity spacer, hermetically sealed.
      9.2.4. Glass Coating: Low 'E' coating, surface number 2.
      9.2.5. IGMAC or IGCC/IGMA certified, permanently marked either on spacers or on at least one component lite of units with appropriate certification label.
   9.3.Comply with recommendations in the Glass Association of North America (GANA) publications, except where more stringent requirements are indicated: GANA Glazing Manual; GANA Engineering Standards Manual; GANA Laminated Glazing Reference Manual; GANA Sealant Manual. Insulating glass units supplied to bear the certification mark of IGMAC or IGCC/IGMA.
   9.4.Manufacturers: Fabrication processes, including low emissivity and reflective coatings, insulating, laminated, silk-screening and tempering shall be manufactured by a single manufacturer with a minimum of ten (10) years of fabrication experience and meet ANSI / ASQC 9002 1994.
   9.5.For all glass in guardrails, comply with Ontario Building Code SB-13 and table 2.1.1.1.
   9.6.Shop drawings: Show details of each type of glazing system in conjunction with the framing system indicating type of glass, sizes, shapes, glazing material and quantity. Show details indicating glazing material, glazing thickness, bite on the glass and glass edge clearance. Indicate analysis of glass including maximum deflection and allowable stresses from imposed dead/live loads and thermal loads.
   9.7.Provide engineered shop drawings for glazing assemblies where required for loadbearing conditions including guard or guardrail, include for all: bearing capacities, spans, spacing, sizing, fasteners loads, deflection, etc. Provide shop drawings of all items for review by the consultants.
      9.7.1. Provide engineering to meet design and comply with applicable building code requirements, including design to withstand lateral guard loads or other imposed loads indicated in construction documents and submit shop drawings showing same, sealed by structural engineer licensed to practice in the province of Ontario.
      9.7.2. Refer to and coordinate with requirements of 00 Procurement and Contracting, 01 General Requirements, and pertinent divisions for related work such as: 05 Metals (e.g. Misc. Metal structure or components for guardrails)
      9.7.3. Provide inspections during construction and final certification by the responsible engineer that the installation has been completed in accordance with the approved shop drawings.

09 -FINISHES

1. Gypsum Board Assemblies and Metal Framing:
   1.1.Steel stud framing including exterior walls, fascias, overhangs, parapets and interior partitioning, bulkheads, ceiling framing. Be responsible for the structural design of all steel stud framing. Include for all galvanizing, gauges, bearing capacities, spans, spacing, tracks & accessories, fasteners loads, deflection, etc.. Provide shop drawings of all items for review by the consultants.
      1.1.1. Provide engineering to meet design and comply with applicable building code requirements, including design to withstand lateral loads, lateral guard loads or other imposed loads indicated in construction documents and submit shop drawings showing same, sealed by structural engineer licensed to practice in the province of Ontario.
      1.1.2. All elements shall comply with all applicable materials and methods tests and standards, which shall be listed on the shop drawings.
      1.1.3. Provide inspections during construction and final certification by the responsible engineer that the installation has been completed in accordance with the approved shop drawings.
   1.2.Materials standard of acceptance (or approved equal):
      1.2.1. Gypsum board, regular type: to ASTMC1396/C1396M, regular, thickness as indicated:
         1.2.1.1.CGC 'Sheetrock Regular'
         1.2.1.2.Georgia Pacific 'ToughRock'
      1.2.2. Gypsum board, fire rated type: to ASTMC1396/C1396M, Type X, thickness as indicated:
         1.2.2.1.CGC 'Sheetrock Firecode Type C and Type X'
         1.2.2.2.Georgia Pacific 'ToughRock Fireguard and Fireguard C'
      1.2.3. Gypsum liner panel: to ASTMC1658/C1658M, Type X, 1"thick, 24"wide x maximum practical length:
         1.2.3.1.CGC 'Sheetrock Glass-Mat Liner Panel'
         1.2.3.2.Georgia-Pacific 'DensGlass Shaftliner'
      1.2.4. Water-resistant gypsum board (green board): to ASTMC1396/C1396M, thickness as indicated:
         1.2.4.1.CGC 'Sheetrock, Water Resistant'
      1.2.5. Exterior gypsum soffit board: to ASTMC1396/C1396M thickness as indicated:
         1.2.5.1.Glass mat water-resistant gypsum backing board: to ASTMC1178/C1178M, thickness as indicated:
         1.2.5.2.Georgia-Pacific 'DensShield'
      1.2.6. Glass mat gypsum substrate sheathing: to ASTMC1177/C1177M, thickness as indicated:
         1.2.6.1.Georgia-Pacific 'DensGlass Sheathing and Fireguard Sheathing '
         1.2.6.2.CGC 'Securock Glass-Mat Sheathing, Regular and Firecode Cores'
         1.2.6.3.Georgia-Pacific 'DensDeck Roof Board'
         1.2.6.4.CGC 'Securock Glass-Mat Roof Board'
   1.3.Provide all gypsum board, sheathing, etc., as required for a complete project. Build-in wood blocking supports for all washroom fixtures, mirrors, vanities & accessories, handrails, adult change table, signs, millwork, etc.
   1.4.Install and finish gypsum board in accordance with ASTM 840, ASTM C1280 and:
      1.4.1. Provide control / expansion joints where indicated, at building construction joints, where wall or partition dimension exceeds 9m in uninterrupted length or height, where ceiling dimensions exceed 9m in linear dimension or 84m² (15m or 230m² with perimeter relief).
      1.4.2. Finish face panel joints and internal angles with joint system consisting of joint compound.
      1.4.3. Tape and fill joints with approved joint compound, joint tape and taping compound installed according to manufacturer's directions, feathered out onto panel faces and in accordance with quality control standards established on site with the project manager, minimum level-2 finish where used as substrate for tile and level-4 finish unless noted otherwise.
      1.4.4. Install fire rated assemblies in accordance with assembly listing requirements in order to obtain fire ratings indicated and as required by authorities having jurisdiction.
2. Reserved
3. Reserved
4. Reserved
5. Reserved
6. Painting
   6.1.Provide submittals as requested by Project Manager, including but not limited to:
      6.1.1. Full Range Colour Sample Chips
      6.1.2. Duplicate drawdowns of each selected colour
   6.2.Perform all painting work in accordance with MPI Architectural Painting Specifications Manual, MPI Custom grade finish requirements and apply paint materials in accordance with paint manufacturer's written application instructions:
   6.3.Provide paint materials for paint systems from single manufacturer for each system used acceptable Manufactures or equivalent):
      6.3.1. Sherwin Williams 'Harmony'and 'ProMar'
      6.3.2. Benjamin Moore 'Ecospec'
   6.4.Except where noted otherwise provide minimum: MPI listed materials as approved by the Project Manager, one primer coat and two finish coats of low v.o.c. high performance architectural latex over primer of MPI paint system suitable for substrate.
   6.5.Colour schedule will be based upon selection of one base colour and one accent colour. No more than two colours will be selected for entire project and no more than one colour will be selected in each area.
   6.6.All washrooms, doors, frames, trim, casings, basebeards to be G5 (semi-gloss) all other paint G1 (flat). Colour selection from manufactures full range of colours.
   6.7.Repair minor imperfections in finish prior to priming, prior to installing first finish coat. Re-prime any patches prior to continuing.
   6.8.Remove all dirt, grease, etc. Before painting.
   6.9.Prime and paint exposed steel lintels, & miscellaneous steel stairs, guards, handrails, bollards, etc.. Paint all gypsum board not covered with other materials, for a complete job.

10 -SPECIALTIES

1. Supply and install all plumbing fixtures and washroom accessories as indicated in construction documents. Items to be selected from single and matching supplier product line to meet code requirements and to Project Managers selection.

11 -EQUIPMENT

1. Supply and install Loading Dock Bumpers, Seals, Dock Levelers, and accessories as indicated in construction documents, provide shop drawings for coordination with related work including concrete formwork, overhead doors, etc. Products as indicated, to Project Managers selection.

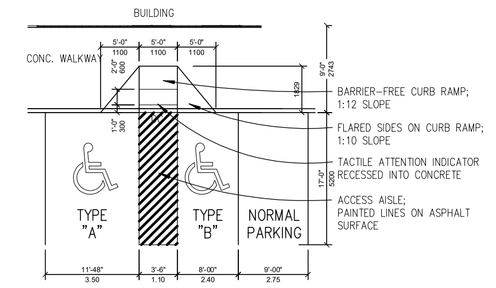
ONTARIO BUILDING CODE DATA MATRIX — Revised: 2019 03 06

PART 3 - FIRE PROTECTION, OCCUPANT SAFETY AND ACCESSIBILITY — OBC REFERENCE[1]

3.00	BUILDING CODE VERSION	O.Reg. 332/12	LAST AMENDMENT O.Reg. 191/14		
3.01	PROJECT TYPE	New Construction			[A] 1.1.2.
		Proposed 1-storey, sprinklered, nonconbustible, slab-on-grade, pre-engineered warehouse building.			
3.02

ALL BARRIER-FREE PARKING SPACES SHALL BE PROVIDED WITH:
1. VERTICAL SIGNAGE:
   a) MIN. 300mm WIDE x 600mm HIGH
   b) MOUNTED AT A HEIGHT OF 1.5m – 2.0m FROM THE GROUND
   c) OF CONTRASTING COLOUR WITH THE BACKGROUND ENVIRONMENT
2. PAVEMENT MARKING THAT ARE:
   a) MIN. 1525mm x 1525mm
   b) SLIP RESISTANT
   c) CLEARLY VISIBLE THROUGH THE USE OF HIGH TONAL CONTRAST TO THE SURFACE OF THE PARKING SPACE
   d) LOCATED NEAR THE BACK OF THE SPACE

ALL BARRIER-FREE PARKING SPACES SHALL BE PROVIDED WIT
1. VERTICAL SIGNAGE:
   a) MIN. 300mm WIDE x 600mm HIGH
   b) MOUNTED AT A HEIGHT OF 1.5m – 2.0m FROM THE GROUND
   c) OF CONTRASTING COLOUR WITH THE BACKGROUND ENVIRONMENT
2. PAVEMENT MARKING THAT ARE:
   a) MIN. 1525mm x 1525mm
   b) SLIP RESISTANT
   c) CLEARLY VISIBLE THROUGH THE USE OF HIGH TONAL CONTRAST TO THE SURFACE OF THE PARKING SPACE
   d) LOCATED NEAR THE BACK OF THE SPACE



2 / A012 BF PARKING PLAN
1 : 100

SITE PLAN LEGEND

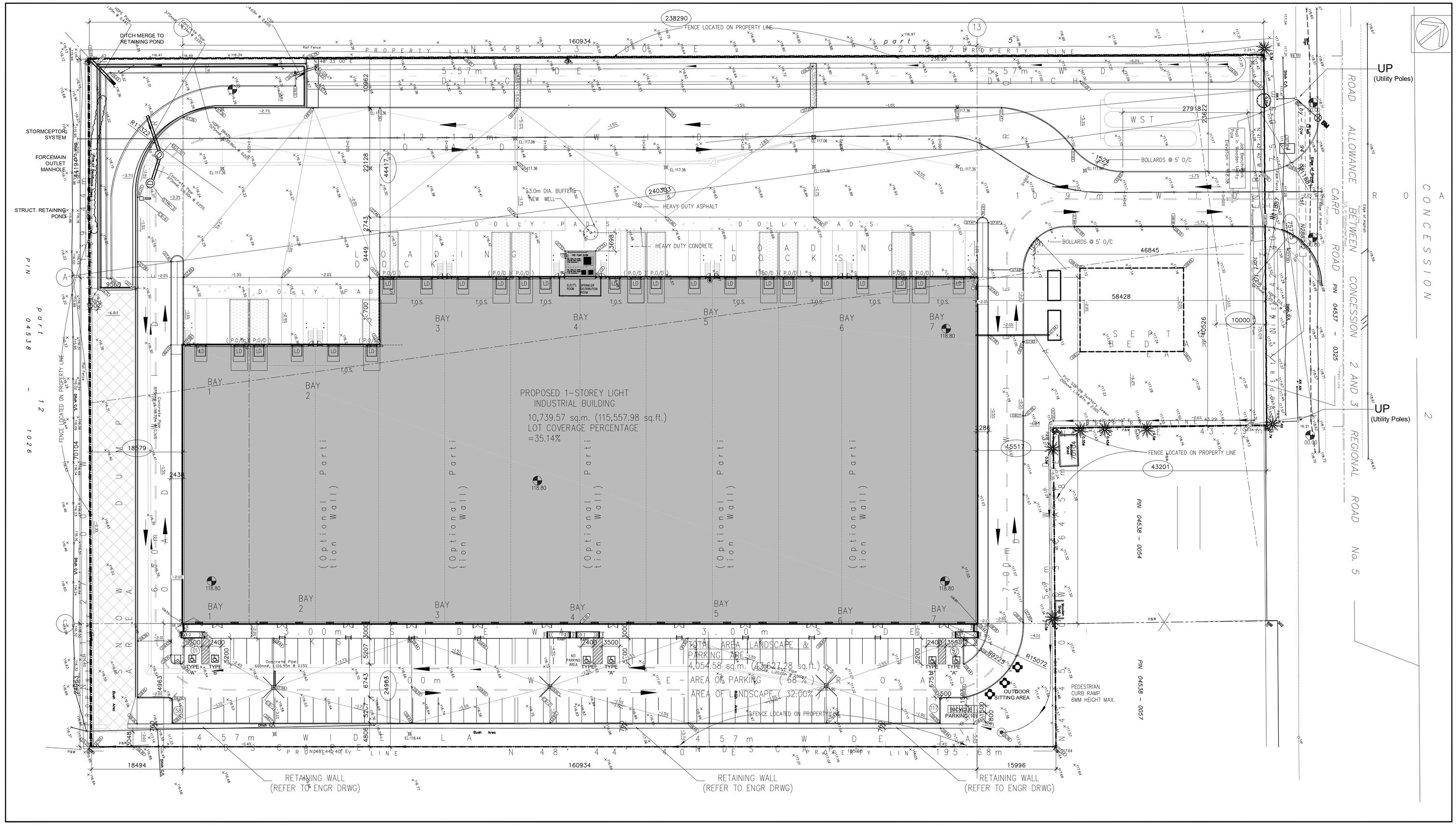
ICON	DESCRIPTION
	Concrete
	Landscape Area
	Proposed Buildings
	Concrete Curb
	Depressed Curb
	Overhead Wires
	Property Lin-s
	PROVISION FOR CONCRETE RAMP
	Fence
	Signage
	BF Parking Space
	6m Wide Fire Route (12m centreline radius on all turns, TYP.)
	Principal Entrance Door
	Exterior Door ("O/H" indicates Overhead Door)
	INTERNAL ROAD / FIRE ROUTE
1.80	**BIKE PARKING SPACE**
	(P O/H) PROVISION FOR OVERHEAD DOOR

SITE PLAN NOTES

Note #	Note Text
(E)FH	Existing Fire Hydrant
(E)GS	Existing Gravel Shoulder to remain
(E)UP	Existing Utility Pole
BR	Bike Rack, for 5 bikes – See landscape plan
CC	Concrete Curb
CP	Concrete Pad Slab for padmount transformer; see Civil for details
CRW	Concrete Retaining Wall
CS	Concrete Stair; Provide 50mm wide colour-contrasted, slip-resistant nosing strip at leading edge of tread for full width of stair (Typical)
CSW	Concrete Sidewalk; 2m wide, as per City Standard Details; See Civil.
CW	Concrete Walkway
DC	Depressed Curb
FH	Fire Hydrant
GCD	Grooved Concrete Driveway
GSR	Galvanized Steel Guardrail
LZ	Loading Zone, Painted Lines
PB	Painted Bollard
RA	Pedestrian Rest Area, 1800mm x 1800mm, for Barrier-Free path of travel where width of walkway is less than 1800mm wide.
RCW	Recessed Concrete Walkway
TWSI	Tactile Walking Surface Indicator, recessed into walking surface. Minimum 600mm deep x full width of stair or walkway; Locate TWSI one tread-depth back from leading edge of nosing at top of stairs or 150mm from back edge of curb for walkways. Colour-contrasted to walking surface, slip-resistant and non-glare; truncated dome pattern as per AODA standard.



3 / A002 LOCATION PLAN
N.T.S.



1 / A012 SITE PLAN
Scale: 1/400m

DATE	ISSUED FOR	REV
2025-04-09	ISSUED FOR CLIENT REVIEW	1
2025-04-11	ISSUED FOR STRUCT.,MEP, LANDSCAPE & CIVIL	2
2025-05-01	ISSUED FOR CLIENTS, LANDSCAPE & CIVIL	3
2025-06-12	ISSUED FOR CLIENTS & COORDINATION	4
2025-06-24	ISSUED FOR CLIENTS & COORDINATION	5
2025-07-29	ISSUED FOR CLIENTS for SPC	6
2025-08-07	ISSUED FOR CLIENTS (Update SITE PLAN)	7
2025-08-09	ISSUED FOR CLIENTS (Updated SITE PLAN)	8
2025-12-03	ISSUED FOR CITY FOR SITE PLAN APPROVAL	9

This drawing has been prepared solely for the use of J.I.L CANADA-EAST and there are no representations of any kind made by

GENERAL NOTES:
1. THE CONTRACTOR SHALL CHECK AND VERIFY ALL DIMENSIONS AND REPORT ALL ERRORS AND OMISSIONS TO THE ARCHITECT FOR HIS WRITTEN PERMISSION BEFORE PROCEEDING WITH THE WORK.
2. NOT FOR CONSTRUCTION UNLESS SIGNED BY THE ARCHITECT
3. NOT TO BE SCALED OR REPRODUCED WITHOUT WRITTEN PERMISSION

STUDIO G68 LTD
Cell:+1 613-601-3888 Email: gar.studio68@outlook.com
Ottawa,ON, Canada K1V 8T7

RP ANCHETA ARCHITECT
24 MONCHERIFF DRIVE, TORONTO ONTARIO, M9W 2R2 TEL / TEL: 416-834-9250 EMAIL / ARCHITECTRP@GMAIL.COM

Consultants

Surveyor:
TOPOGRAPHICAL PLAN OF
PT LT 12, CON 3
HUNTLEY PT 5, 5R11999;
WEST CARLETON; T/W N561680
CITY OF OTTAWA
Prepared by Annis, O'Sullivan, Vollebekk Ltd.
On-Site Work Completed on June 6, 2022

Planner: **P-Squared Concepts**
2200 Thurston Dr #203, Ottawa, ON K1G 6E1
planning@p2concepts.ca
613-695-0192

Civil: **Fritz Gérald St Fleur**
fritzgerald.stfleur@gmail.com
613-327-9862

Landscape:
CIVITAS GROUP Civitas Architecture Inc
14 Chamberlain Ave, Ottawa ON K1S1V9 (613) 742-7482

Seal(s)

Project Manager	Drawn JV
Project Leader	Checked GF

Client
MEGHA HOLDINGS
401 COVENTRY ROAD, OTTAWA
K1K 2C5

Project
PROPOSED 1 STOREY WAREHOUSE
3113 CARP ROAD, OTTAWA
K0A 1L0

Drawing Title
SITE PLAN LOCATION PLAN

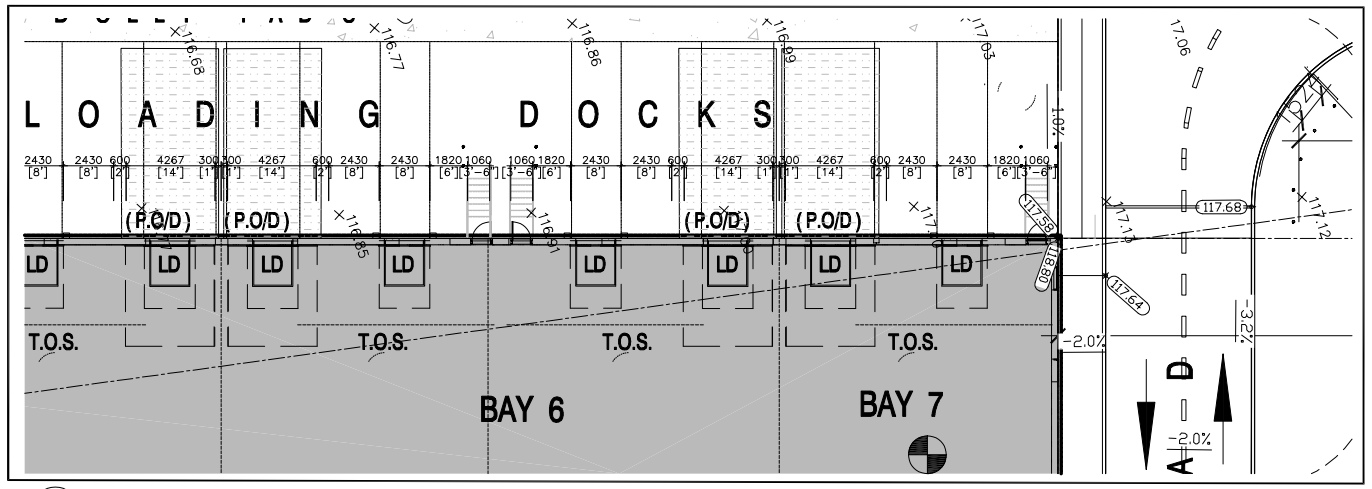
Scale

Project No.
PC2025-0105

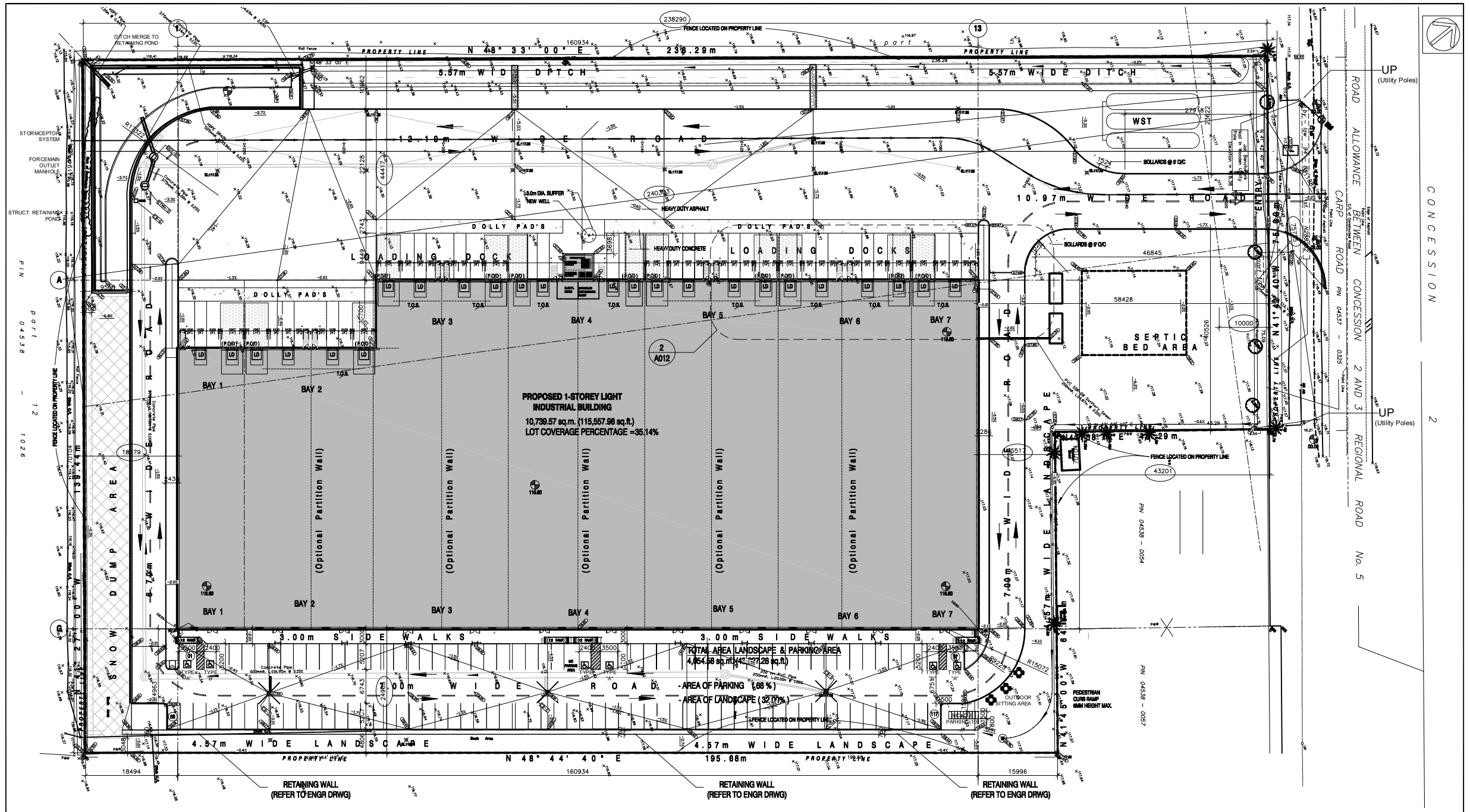
Drawing No.
A-012

ISO A1 Title Block - v.2023 - Rev (Sept/23) - Copyright © 2023

C:\Users\Vaurie\Documents\Revit Locals\1943_1243 Teron Rd Central_taurie@KAPES.rvt
2023-05-02 9:16:36 AM



2 / A013 TYPICAL LOADING DOCK DOOR
Scale: 1/400m



1 / A013 SITE PLAN
Scale: 1/400m

C:\Users\fcourley\Documents\Revit Locals\1943_1243 Teron Rd Central_fcourleyKVF80.rvt

2023-05-02 9:16:39 AM

STUDIO G68 LTD
Cell:+1 613-901-3668 Email: gar.studio68@outlook.com
Ottawa ON, Canada K1V 8T7

RP ANCHETA ARCHITECT
24 HONORATO DRIVE, TORONTO ONTARIO, M9W 2M2
TEL: TEL: +1 (416)-834-5222
EMAIL: ARCHINEO@GMAIL.COM

DATE	ISSUED FOR	REV
2025-04-09	ISSUED FOR CLIENT REVIEW	1
2025-04-11	ISSUED FOR STRUCT.,MEP, LANDSCAPE & CIVIL	2
2025-05-01	ISSUED FOR CLIENTS, LANDSCAPE & CIVIL	3
2025-05-12	ISSUED FOR CLIENTS & COORDINATION	4
2025-05-24	ISSUED FOR CLIENTS & COORDINATION	5
2025-07-30	ISSUED FOR CLIENTS for SPC	6
2025-08-07	ISSUED FOR CLIENTS (Update SITE PLAN)	7
2025-08-09	ISSUED FOR CLIENTS (Updated SITE PLAN)	8
2025-12-03	ISSUED FOR CITY FOR SITE PLAN APPROVAL	9

This drawing has been prepared solely for the use of J.I.I. CANADA-EAST and there are no representations of any kind made by

GENERAL NOTES:
1. THE CONTRACTOR SHALL CHECK AND VERIFY ALL DIMENSIONS AND REPORT ALL ERRORS AND OMISSIONS TO THE ARCHITECT FOR HIS WRITTEN PERMISSION BEFORE PROCEEDING WITH THE WORK.
2. NOT FOR CONSTRUCTION UNLESS SIGNED BY THE ARCHITECT
3. NOT TO BE SCALED OR REPRODUCED WITHOUT WRITTEN PERMISSION

Consultants

3 **Surveyor:** TOPOGRAPHICAL PLAN OF
PART OF LOT 12
CONCESSION 3
GEOGRAPHIC TOWNSHIP OF HUNTLEY
CITY OF OTTAWA
Prepared by Annis, O'Sullivan, Vollebekin Ltd.
On-Site Work Completed on June 6, 2022

Planner: P-Squared Concepts
2200 Thurston Dr #203, Ottawa, ON K1G 6E1
planning@p2concepts.ca
613-695-0192

Civil: Fritz Gérald St Fleur
fritzgerald.stfleur@gmail.com
613-327-9862

2 **Landscape:** CIVITAS GROUP Civitas Architecture Inc
56 Chamberlain Ave, Ottawa ON K1S1V9 (613) 742-7492

Seal(s)

Project Manager	Drawn JV
Project Leader	Checked GF

Client
MEGHA HOLDINGS
401 COVENTRY ROAD, OTTAWA
K1K 2C5

Project
PROPOSED 1 STOREY WAREHOUSE
3113 CARP ROAD, OTTAWA
K0A 1L0

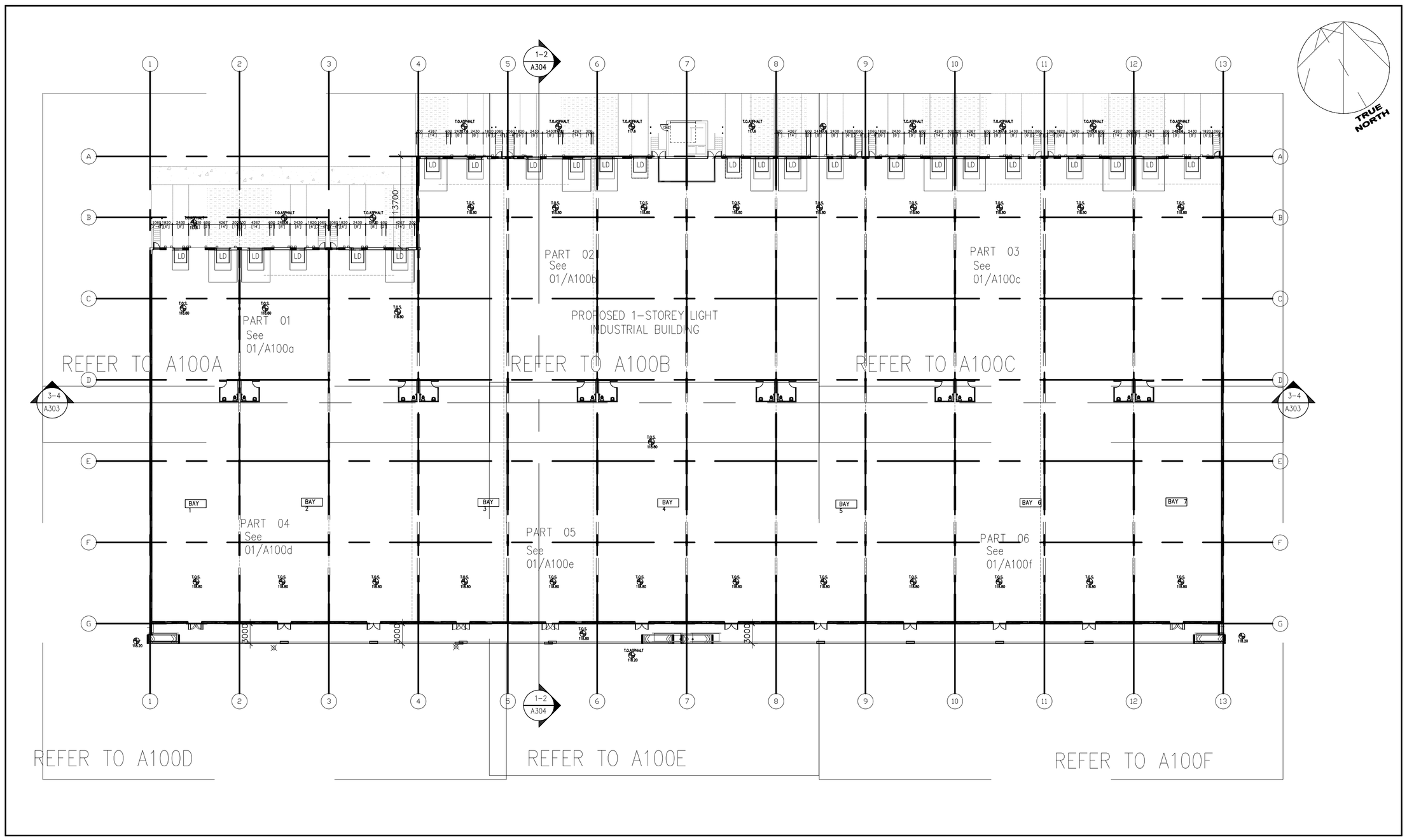
1 **Drawing Title**
SITE PLAN & TYPICAL LOADING DOCK DOOR

Scale

Project No. PC2025-0105

Drawing No. A-013

ISO A1 Title Block - v. 2023 - Rev (Sept/23) - Copyright © 2023



5 GROUND FLOOR PLAN – KEY PLAN
A100 SCALE: 1:250

UNIVERSAL WR NOTES

UNIVERSAL WASHROOM SHALL BE IDENTIFIED WITH A SIGN CONSISTING OF THE INTERNATIONAL SYMBOL OF ACCESS LOCATED NOT LESS THAN 3'-11" AND NOT MORE THAN 4'-11" ABOVE FLOOR.

LAVATORY (CONFORMING TO OBC 3.8.3.11.(1), (3) &
- SHALL HAVE INSULATED PIPES WHERE THEY WOULD PRESENT A BURN HAZARD
- SHALL BE EQUIPPED WITH LEVER TYPE HANDLES WITHOUT SPRING LOADING OPERATE AUTOMATICALLY

S SOAP & SOAP DISPENSERS (BY OWNER):
- TO BE ACCESSIBLE BY PERSONS IN WHEELCHAIRS; TO BE OPERABLE WITH ONE HAND; BE LOCATED NOT MORE THAN 3'-11" AFF AND NOT MORE THAN 2'-0" AWAY HORIZONTALLY FROM EDGE OF LAVATORY (OBC 3.8.3.11.(1)(g))

PT PAPER TOWEL DISPENSER/DISPOSAL (BY OWNER):
- TO BE ACCESSIBLE BY PERSON IN WHEELCHAIRS; TO BE OPERABLE WITH ONE HAND; BE LOCATED SO THAT DISPENSING HEIGHT IS NOT MORE THAN 3'-11" AFF, NOT MORE THAN 2'-0" HORIZONTALLY FROM EDGE OF LAVATORY (OBC 3.8.3.11.(1)(h))

TP TOILET PAPER DISPENSER:
- FROST 146 CHROME, SINGLE ROLL
- WALL MOUNTED & LOCATED BELOW THE GRAB BAR (OBC 3.8.3.8.(1)(g)(i) &(ii))

GB GRAB BARS: OBC 3.8.3.8.(7)
- 1 1/4" O.D., SATIN STAINLESS STEEL, PEENED.
- MAINTAIN 1 ½" – 2" CLEARANCE BETWEEN WALL AND INSIDE SURFACE OF GRAB
- SHALL BE INSTALLED TO RESIST A 1.3 kN LOAD APPLIED HORIZONTALLY OR VERTICALLY

CH COAT HOOK:
- FROST 1138, SINGLE HOOK
- BE MOUNTED NOT MORE THAN 3'-11" AFF, PROJECT NOT MORE THAN 3" FROM WALL OBC 3.8.3.8.(1)(k)

SH SHELF:
- LOCATED NOT MORE THAN 3'-6" AFF, PROJECT NOT MORE THAN 4" FROM WALL (3.8.3.12.(1)(g))

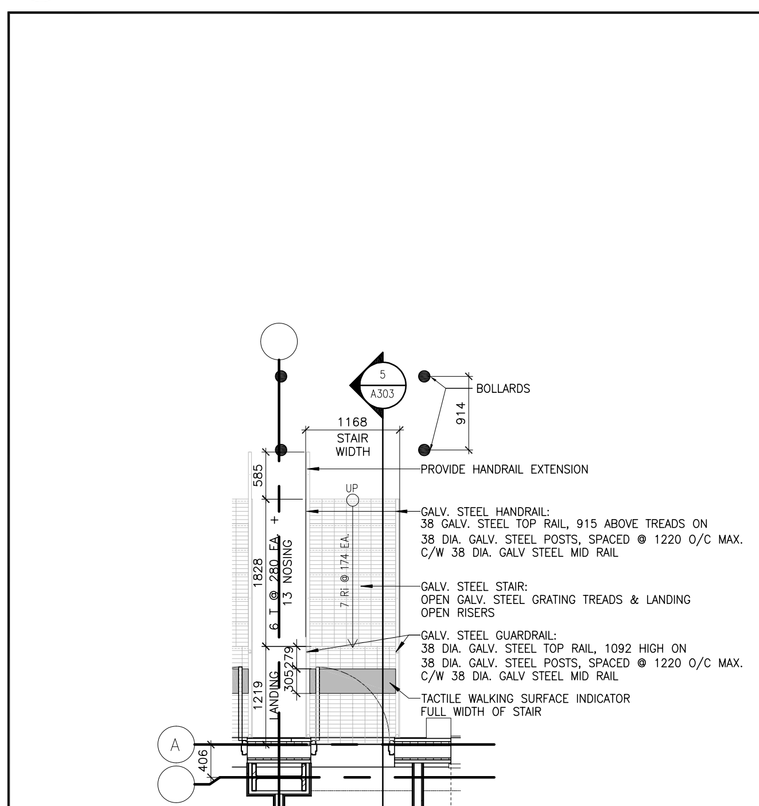
MIRROR:
- MOUNTED WITH ITS BOTTOM EDGE NOT MORE THAN 3'-3" AFF INCLINED TO THE VERTICAL BE USED BY A PERSON IN A WHEELCHAIR (3.8.3.12.(1)(i))
- SEE SPECS, DIV. 08

LIGHTING IN UNIVERSAL WASHROOM TO BE CONTROLLED BY A MOTION SENSOR INSTALLED WITH SWITCH CONTROLLERS EQUIPPED FOR A FAIL-SAFE OPERATION AND ILLUMINATION TIMERS SET FOR A MINIMUM MINUTE DURATION. OBC 3.8.3.12.(1)(k)

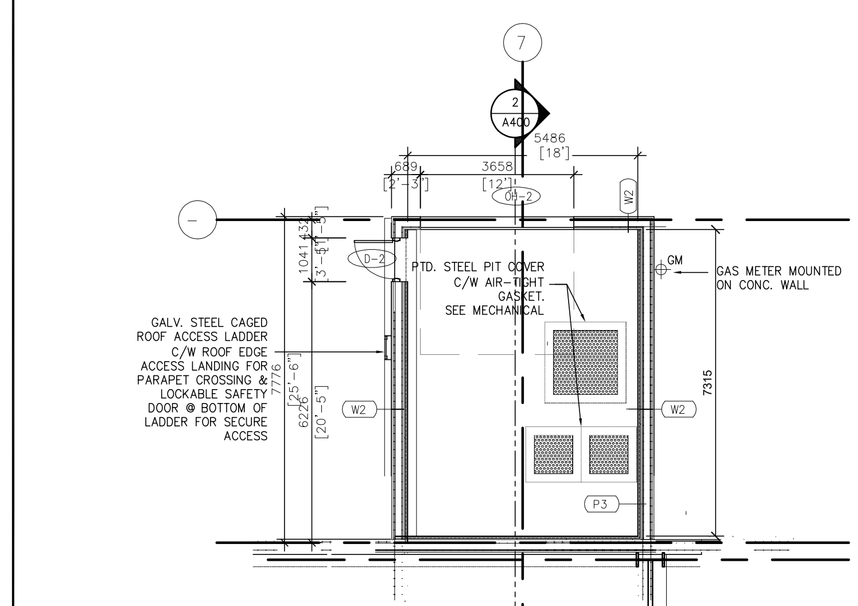
DOOR SHALL BE EQUIPPED WITH AN ELECTRIC STRIKE & ELECTRONIC LOCKING MECHANISM ACTIVATED PUSH-BUTTON LOCATED INSIDE THE WASHROOM. LOCKING MECHANISM SHALL ACTIVATE ELECTRIC STRIKE DEACTIVATE POWER DOOR OPERATOR FROM OUTSIDE OF WASHROOM.

CONTOLS FOR POWER DOORS SHALL OBC 3.8.3.3.(12)
- HAVE A FACE DIMENSION OF NOT LESS THAN 6" dia. WHERE THE CONTROL IS A 2" x 4" WHERE THE CONTROL IS RECTANGULAR
- BE OPERABLE USING A CLOSED FIST
- BE LOCATED SO THAT ITS CENTER IS NOT LESS THAN 36" AND NOT MORE THAN 44" AFF
- BE LOCATED NOT LESS THAN 2'-0" AND NOT MORE THAN 4'-11" BEYOND SWING WHERE THE DOOR SWINGS TOWARDS THE CONTROL
- BE LOCATED IN A CLEARLY VISIBLE POSITION
- CONTAIN A SIGN INCORPORATING THE INTERNATIONAL SYMBOL OF ACCESS

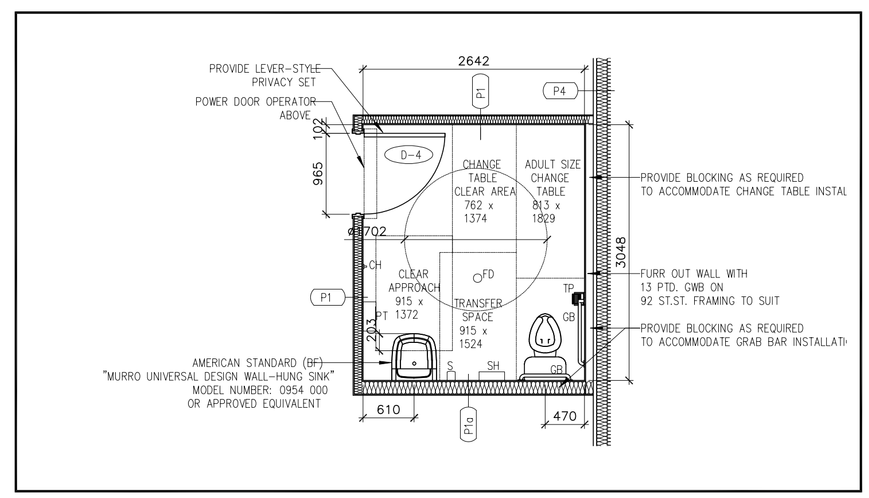
AS PER OBC 3.8.3.12.(2)
A UNIVERSAL WASHROOM SHALL HAVE:
(a) AN EMERGENCY CALL SYSTEM THAT CONSISTS OF AUDIBLE AND VISUAL SIGNAL DEVICES INSIDE AND OUTSIDE OF THE WASHROOM THAT ARE ACTIVATED BY A CONTROL DEVICE INSIDE THE WASHROOM, AN
(b) AN EMERGENCY SIGN THAT CONTAINS THE WORDS IN THE EVENT OF AN EMERGENCY PUSH EMERGENCY BUTTON AND AUDIBLE AND VISUAL SIGNAL WILL ACTIVATE LETTERS AT LEAST 25mm HIGH WITH A 5mm STROKE AND THAT IS POSTED ABOVE THE EMERGENCY BUTTON.
PRESSING EMERGENCY BUTTON SHALL DEACTIVATE THE ELECTRIC STRIKE TO ALLOW ACCESS INTO THE WASHROOM IN CASE OF EMERGENCY OBC 3.8.3.12.(1)(b)



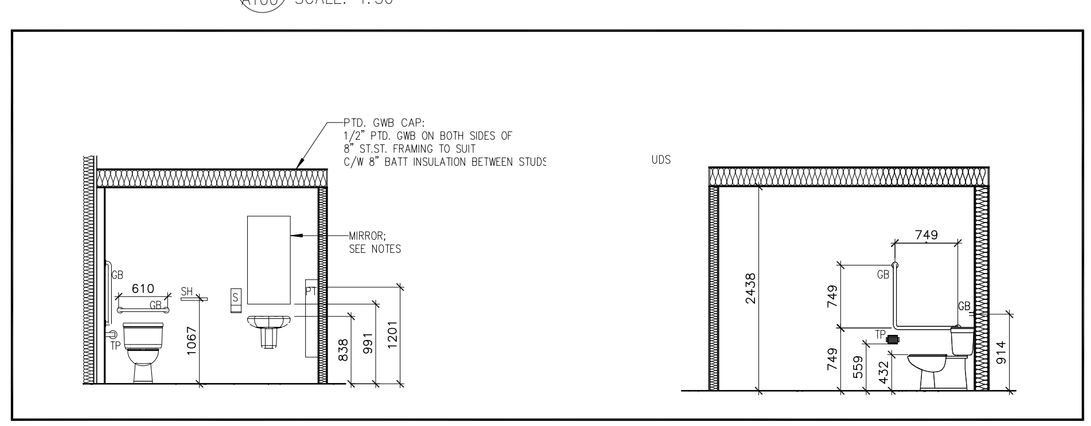
4 STAIR PLAN
A100 SCALE: 1:50



3 FIRE PUMP/SPRINKLER DISTRIBUTION ROOM PLAN
A100 SCALE: 1:100



1 TYP. BF UNIVERSAL WASHROOM PLAN
A100 SCALE: 1:50



2 BF UNIVERSAL WR ELEVATIONS
A100 SCALE 1: 50

Cell:+1 613-501-3888 Email: gar.studio68@outlook.com
Ottawa,ON, Canada K1V 8T7

RP ANCHETA ARCHITECT
24 MONCRIEFF DRIVE, TORONTO ONTARIO M9W 3R2
TEL: TEL: 416-626-6292
EMAIL: ARCHRENZ@GMAIL.COM

DATE	ISSUED FOR	REV
2025-04-09	ISSUED FOR CLIENT REVIEW	1
2025-04-11	ISSUED FOR STRUCT.,MEP, LANDSCAPE & CIVIL	2
2025-05-01	ISSUED FOR CLIENTS, LANDSCAPE & CIVIL	3
2025-06-12	ISSUED FOR CLIENTS & COORDINATION	4
2025-06-24	ISSUED FOR CLIENTS & COORDINATION	5
2025-07-29	ISSUED FOR CLIENTS for SPC	6
2025-08-07	ISSUED FOR CLIENTS (Update SITE PLAN)	7
2025-08-09	ISSUED FOR CLIENTS (Updated SITE PLAN)	8
2025-12-03	ISSUED FOR CITY FOR SITE PLAN APPROVAL	9

This drawing has been prepared solely for the use of J.I.L CANADA-EAST and there are no representations of any kind made by

GENERAL NOTES:
1. THE CONTRACTOR SHALL CHECK AND VERIFY ALL DIMENSIONS AND REPORT ALL ERRORS AND OMISSIONS TO THE ARCHITECT FOR HIS WRITTEN PERMISSION BEFORE PROCEEDING WITH THE WORK.
2. NOT FOR CONSTRUCTION UNLESS SIGNED BY THE ARCHITECT
3. NOT TO BE SCALED OR REPRODUCED WITHOUT WRITTEN PERMISSION

Consultants

Surveyor: TOPOGRAPHICAL PLAN OF
PART OF LOT 12
CONCESSION 3
GEOGRAPHIC TOWNSHIP OF HUNTLEY
CITY OF OTTAWA
Prepared by Annis, O'Sullivan, Vollebekk Ltd.
On-Site Work Completed on June 6, 2022

Planner: **P-Squared Concepts**
2200 Thurston Dr #203, Ottawa, ON K1G 6E1
planning@p2concepts.ca
613-695-0150

Civil: **Fritz Gérald St Fleur**
fritzgerald.stfleur@gmail.com
613-327-9862

Landscape:
CIVITAS GROUP Civitas Architecture Inc
14 Chamberlain Ave, Ottawa ON K1S1V9 (613) 742-7482

Seal(s)

Project Manager	Drawn JV
Project Leader	Checked GF

Client
MEGHA HOLDINGS
401 COVENTRY ROAD, OTTAWA
K1K 2C5

Project
PROPOSED 1 STOREY WAREHOUSE
3113 CARP ROAD, OTTAWA
K0A 1L0

Drawing Title
KEY PLAN
ENLARGE SCALE PLANS
UNIVERSAL WASHROOM

Scale

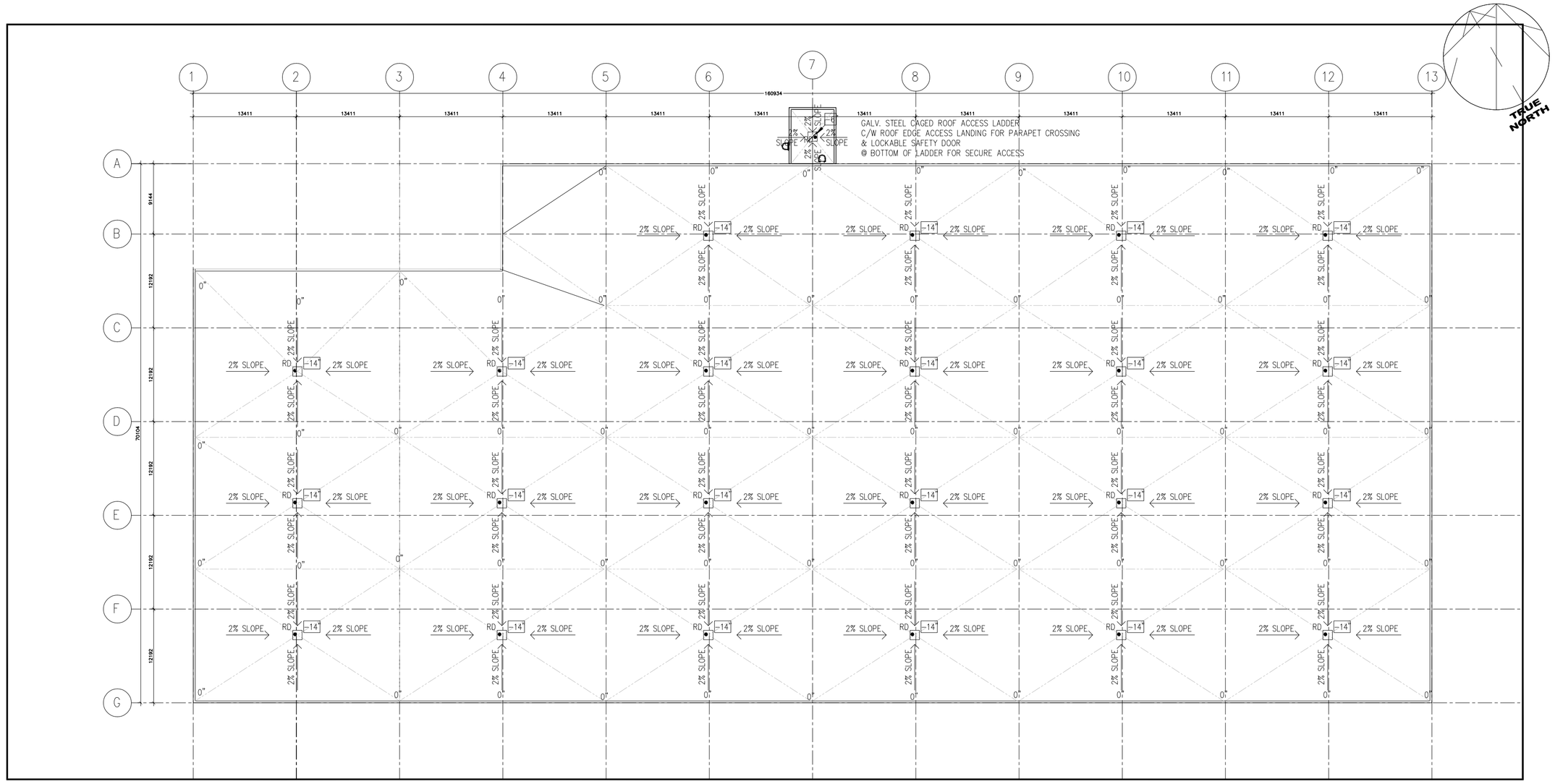
Project No. 24/06

Drawing No. **A-100**

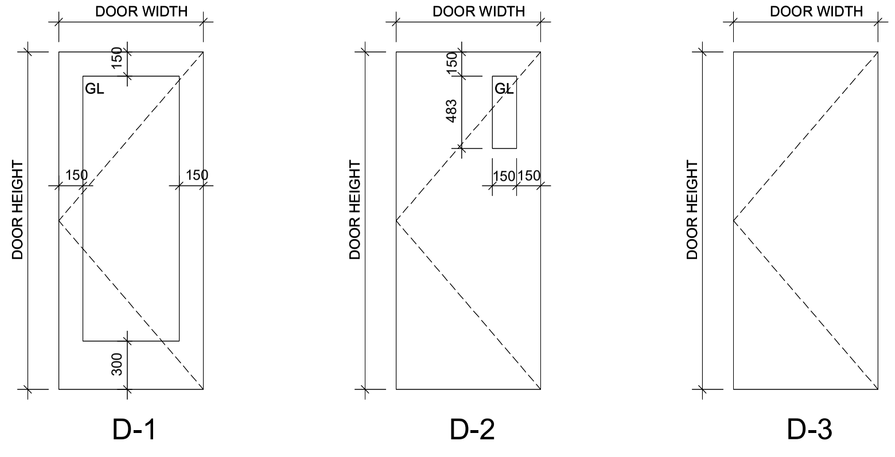
C:\Users\tcurley\Documents\Revit Locals\1943_1243 Teron Rd Central_tcurleyKVF63.rvt

2023-05-02 9:16:36 AM

C:\Users\tcurley\Documents\Revit Locals\1943_1243 Teron Rd Central_tCurleyKVF63.rvt



1 / A101 ROOF PLAN
SCALE: 1:250

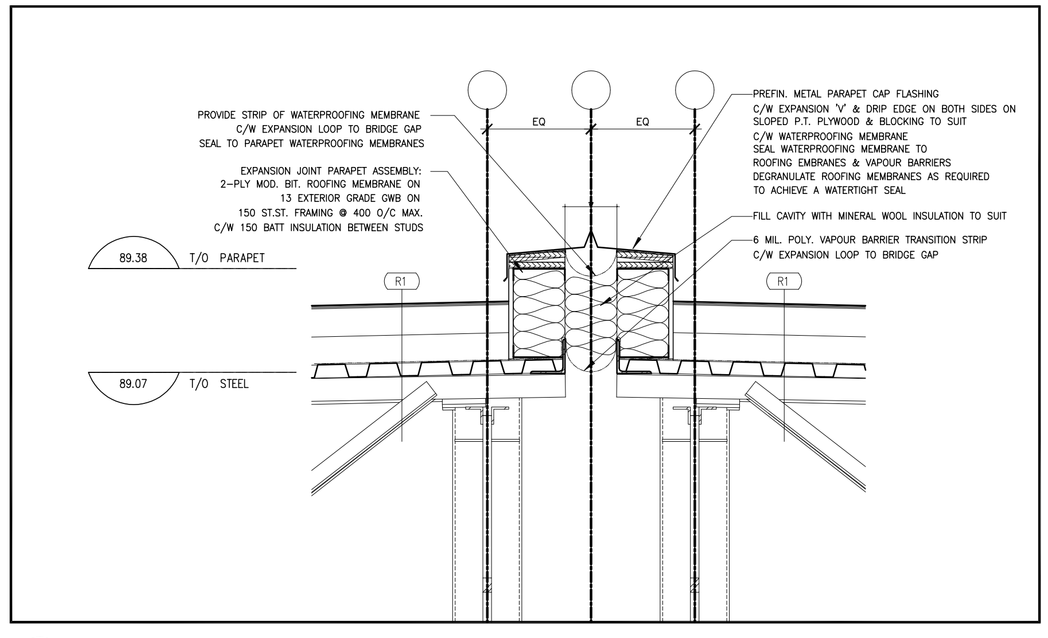


DOOR AND FRAME SCHEDULE

COUNT	DOOR TYPE	DOOR PANEL INFORMATION WIDTH	HEIGHT	THICKNESS	MATERIAL	FINISH	LABEL	FRAME INFORMATION MATERIAL	FINISH	HARDWARE GROUP	REMARKS
01 - EXTERIOR DOORS											
16	D-1	1930	2135	45	ALUM.	CL. ANOD.		ALUM.	ALUM.		HARDWARE BY ALUM. SUPPLIER; PREP FRAME FOR POWER DOOR OPERATOR
23	D-2	915	2135	45	HM	PTD.		PSF	PTD.	H.G. #1	
02 - INTERIOR DOORS											
2	D-3	915	2135	45	HM	PTD.		PSF	PTD.	H.G. #2	
5	D-4	965	2135	45	HM	PTD.		PSF	PTD.	H.G. #3	PREP FRAME FOR POWER DOOR OPERATOR
03 - OVERHEAD DOORS											
51	OH-1	2438	3048	76							SEE DRAWINGS FOR DETAILS
5	OH-2	4267	4877	76							SEE DRAWINGS FOR DETAILS

DOOR HARDWARE SCHEDULE

HARDWARE GROUP	LOCATION	HINGES	SET TYPE	CLOSER	KNOB	PULL	RIM PANIC	KICK PLATE	PUSH PLATE	FLOOR STOP	WALL STOP	SIGNAGE	THRESHOLD	WEATHERSTRIPPING	ASTRAGAL	COORDINATOR	CYLINDER	FLUSH BOLT	DEADBOLT	DEADLOCK	DOOR VIEWER	MAGNETIC HOLD OPEN	COMMENTS	COMMENTS
H.G. #1	EXTERIOR HM DOOR	3 EACH	EXTERIOR SET	X		X	X	X					X	X			X						EXTERIOR THUMB LATCH	
H.G. #2	INTERIOR HM DOOR	3 EACH	LOCKSET	X				X		X		X											STOREROOM FUNCTION; LEVER-STYLE	
H.G. #3	BF WASHROOM DOOR	3 EACH	PRIVACY SET	X				X		X		X											STOREROOM FUNCTION; POWER DOOR OPERATOR; SEE DRAWINGS FOR DETAILS	



2 / A101 SECTION ROOF CURB
SCALE: 1:10

2023-05-02 9:16:36 AM

STUDIO G68 LTD
Cell:+1 613-501-3888 Email: gar.studio68@outlook.com
Ottawa,ON, Canada K1V 8T7

RP ANCHETA ARCHITECT
24 NORTHCLIFF DRIVE, TORONTO ONTARIO, M5M 2R3 TEL.: TEL: 416-424-0200
EMAIL: ARCHIBEAN@ROGERS.COM

DATE	ISSUED FOR	REV
2025-04-09	ISSUED FOR CLIENT REVIEW	1
2025-04-11	ISSUED FOR STRUCT.,MEP, LANDSCAPE & CIVIL	2
2025-05-01	ISSUED FOR CLIENTS, LANDSCAPE & CIVIL	3
2025-06-12	ISSUED FOR CLIENTS & COORDINATION	4
2025-06-24	ISSUED FOR CLIENTS & COORDINATION	5
2025-07-29	ISSUED FOR CLIENTS for SPC	6
2025-08-07	ISSUED FOR CLIENTS (Update SITE PLAN)	7
2025-08-09	ISSUED FOR CLIENTS (Updated SITE PLAN)	8
2025-12-03	ISSUED FOR CITY FOR SITE PLAN APPROVAL	9

This drawing has been prepared solely for the use of J.I.L. CANADA-EAST and there are no representations of any kind made by

GENERAL NOTES:
1. THE CONTRACTOR SHALL CHECK AND VERIFY ALL DIMENSIONS AND REPORT ALL ERRORS AND OMISSIONS TO THE ARCHITECT FOR HIS WRITTEN PERMISSION BEFORE PROCEEDING WITH THE WORK.
2. NOT FOR CONSTRUCTION UNLESS SIGNED BY THE ARCHITECT
3. NOT TO BE SCALED OR REPRODUCED WITHOUT WRITTEN PERMISSION

Consultants

Surveyor: *TOPOGRAPHICAL PLAN OF*
PART OF LOT 12
CONCESSION 3
GEOGRAPHIC TOWNSHIP OF HUNTLEY
CITY OF OTTAWA
Prepared by Annis, O'Sullivan, Vollebekk Ltd.
On-Site Work Completed on June 6, 2022

Planner: **P-Squared Concepts**
2200 Thurston Dr #203, Ottawa, ON K1G 6E1
planning@p2concepts.ca
613-695-0192

Civil: **Fritz Gérald St Fleur**
fritzgerald.stfleur@gmail.com
613-327-9862

Landscape:
CIVITAS GROUP Civitas Architecture Inc
14 Chamberlain Ave, Ottawa ON K1S1V9 (613) 742-7482

Seal(s)

Project Manager	Drawn JV
Project Leader	Checked GF

Client
MEGHA HOLDINGS
401 COVENTRY ROAD, OTTAWA
K1K 2C5

Project
PROPOSED 1 STOREY WAREHOUSE
3113 CARP ROAD, OTTAWA
K0A 1L0

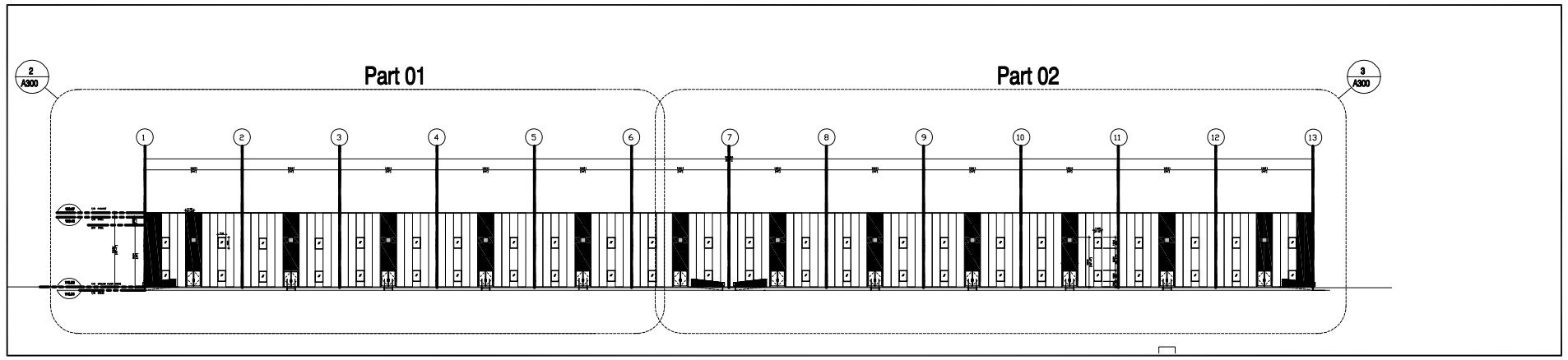
Drawing Title
ROOF PLAN
ROOF DETAIL
DOOR SCHEDULE

Scale

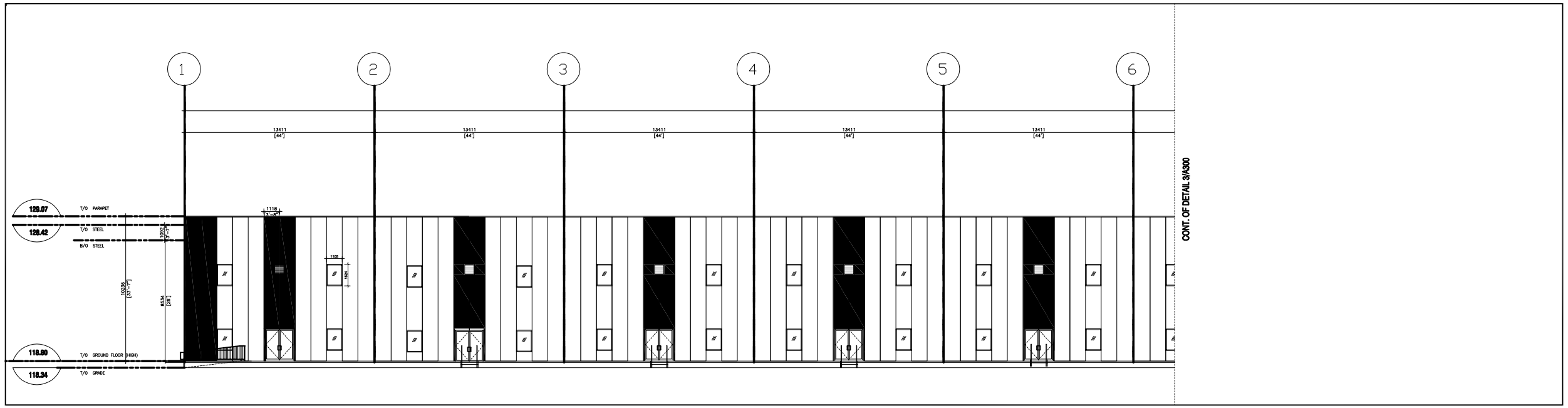
Project No. 24/06

Drawing No. **A-101**

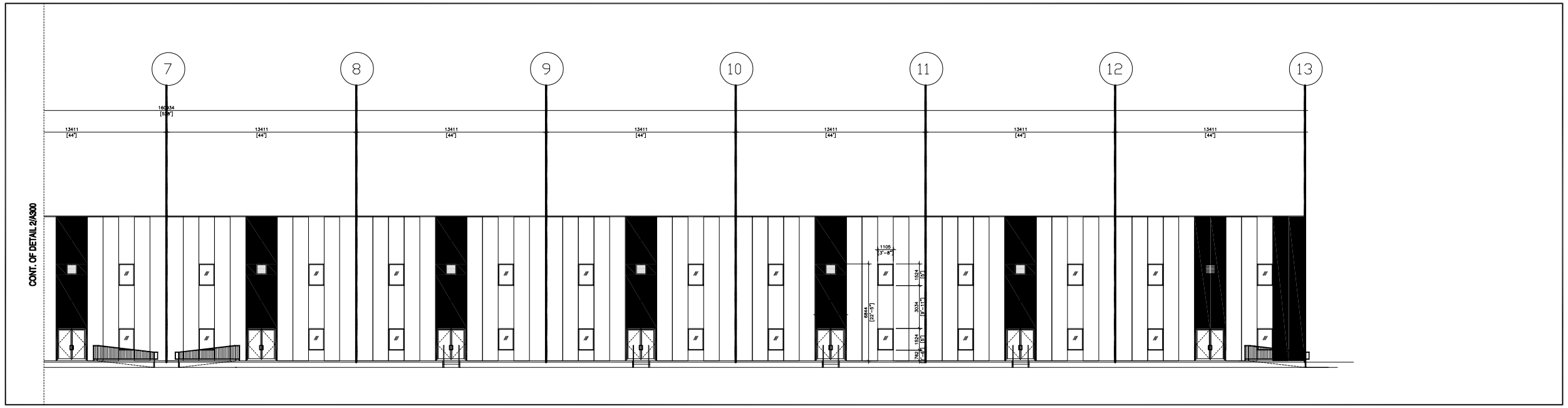
ISO A1 Title Block - v.2023 - Rev (Sept/23) - Copyright © 2023



1 A300 FULL SOUTH SIDE ELEVATION
SCALE: 1:250



2 A300 PART SOUTH SIDE ELEVATION (Part 01)
SCALE: 1:150



3 A300 PART SOUTH SIDE ELEVATION (Part 02)
SCALE: 1:150

ELEVATION NOTES

AW	Clear Anodized Aluminum Window with Clear Glass
CF	Concrete Foundation Wall
ELF	Exterior wall-mounted light fixture; see Electrical
FDC	Fire Department Connection
GL-C	Clear Glazing, Low-E
GR	Painted Steel Guardrail
MD	Painted Hollow-Metal Door & Steel Frame, colour matching adjacent wall colour.
MP1	Prefinished Metal Panel, Rigel Grey
MP2	Prefinished Metal Panel, Riesling
OH1	Solid, Prefinished, Insulated Overhead Door, complete with loading dock weather seal, dock bumper and dock leveler. 8'W x 10'H
OH2	Solid, Prefinished, Insulated Overhead Door. 14'W x 16'H
SL	Galvanized Steel Ladder, complete with Galvanized Steel Cage
ST	Galvanized Steel Stair

STUDIO G58 LTD
Cell:+1 613-501-3888 Email: gar.studio58@outlook.com
Ottawa,ON, Canada K1V 8T7

RP ANCHETA ARCHITECT
24 MONTEMPY DRIVE, TORONTO ONTARIO, M3M 2R2 TEL: TEL: 4164534202
EMAIL: ARCHIRAN@GMAIL.COM

DATE	ISSUED FOR	REV
2025-04-09	ISSUED FOR CLIENT REVIEW	1
2025-04-11	ISSUED FOR STRUCT.,MEP, LANDSCAPE & CIVIL	2
2025-05-01	ISSUED FOR CLIENTS, LANDSCAPE & CIVIL	3
2025-05-12	ISSUED FOR CLIENTS & COORDINATION	4
2025-06-24	ISSUED FOR CLIENTS & COORDINATION	5
2025-07-29	ISSUED FOR CLIENTS for SPC	6
2025-08-07	ISSUED FOR CLIENTS (Update SITE PLAN)	7
2025-08-08	ISSUED FOR CLIENTS (Updated SITE PLAN)	8
2025-12-03	ISSUED FOR CITY FOR SITE PLAN APPROVAL	9

This drawing has been prepared solely for the use of J.I.I. CANADA-EAST and there are no representations of any kind made by

GENERAL NOTES:
1. THE CONTRACTOR SHALL CHECK AND VERIFY ALL DIMENSIONS AND REPORT ALL ERRORS AND OMISSIONS TO THE ARCHITECT FOR HIS WRITTEN PERMISSION BEFORE PROCEEDING WITH THE WORK.
2. NOT FOR CONSTRUCTION UNLESS SIGNED BY THE ARCHITECT
3. NOT TO BE SCALED OR REPRODUCED WITHOUT WRITTEN PERMISSION

Consultants

Surveyor: TOPOGRAPHICAL PLAN OF
PART OF LOT 12
CONCESSION 3
GEOGRAPHIC TOWNSHIP OF HUNTLEY
CITY OF OTTAWA.
Prepared by Annis, O'Sullivan, Vollebekk Ltd.
On Site Work Completed on June 6, 2022

Planner: P-Squared Concepts
2200 Thurston Dr #203, Ottawa, ON K1G 6E1
planning@p2concepts.ca
613-695-0192

Civil: Fritz Gérald St Fleur
fritzgerald.stfleur@gmail.com
613-327-9862

Landscape:
CIVITAS GROUP Civitas Architecture Inc
14 Chamberlain Ave, Ottawa ON K1S1V9 (613) 742-7482

Seal(s)

Project Manager	Drawn JV
Project Leader	Checked GF

Client
MEGHA HOLDINGS
401 COVENTRY ROAD, OTTAWA
K1K 2C5

Project
PROPOSED 1 STOREY WAREHOUSE
3113 CARP ROAD, OTTAWA
K0A 1L0

Drawing Title
BUILDING ELEVATIONS

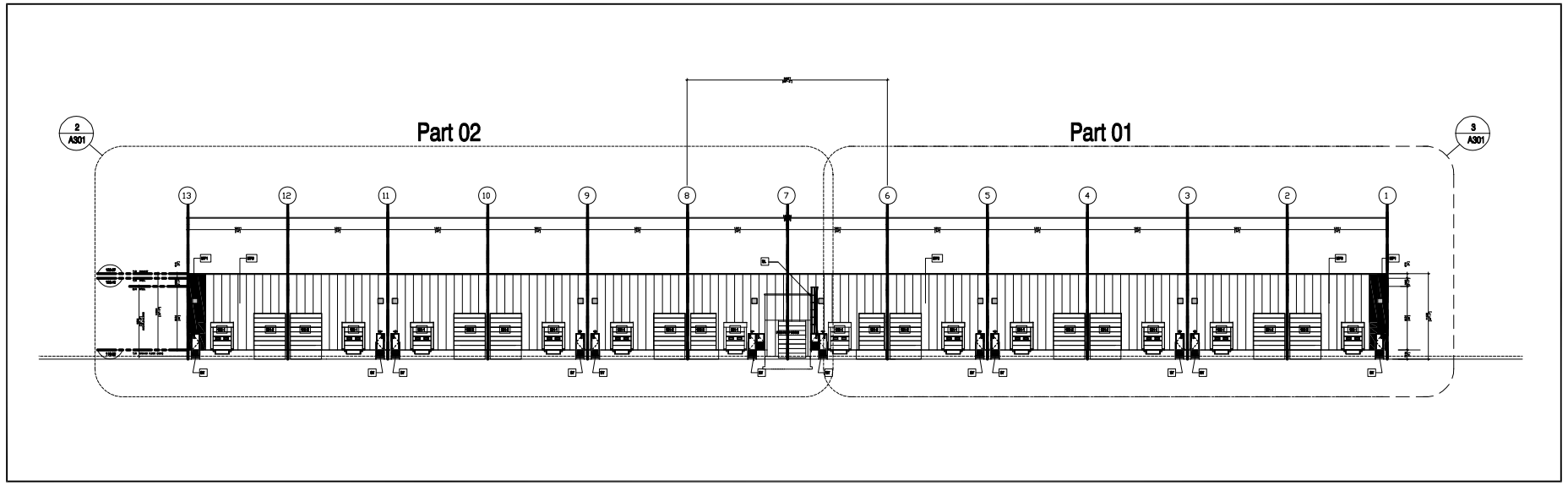
Scale

Project No. 24/06

Drawing No. A-300

2023-05-03 9:16:56 AM

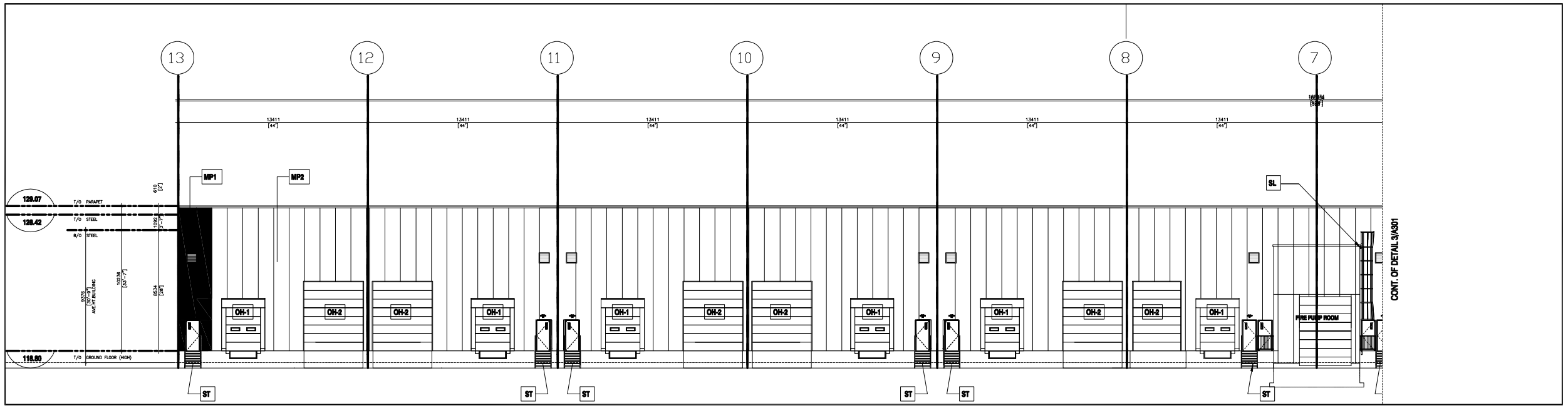
ISO A1 Title Block - v 2023 - Rev (Sept/23) - Copyright © 2023



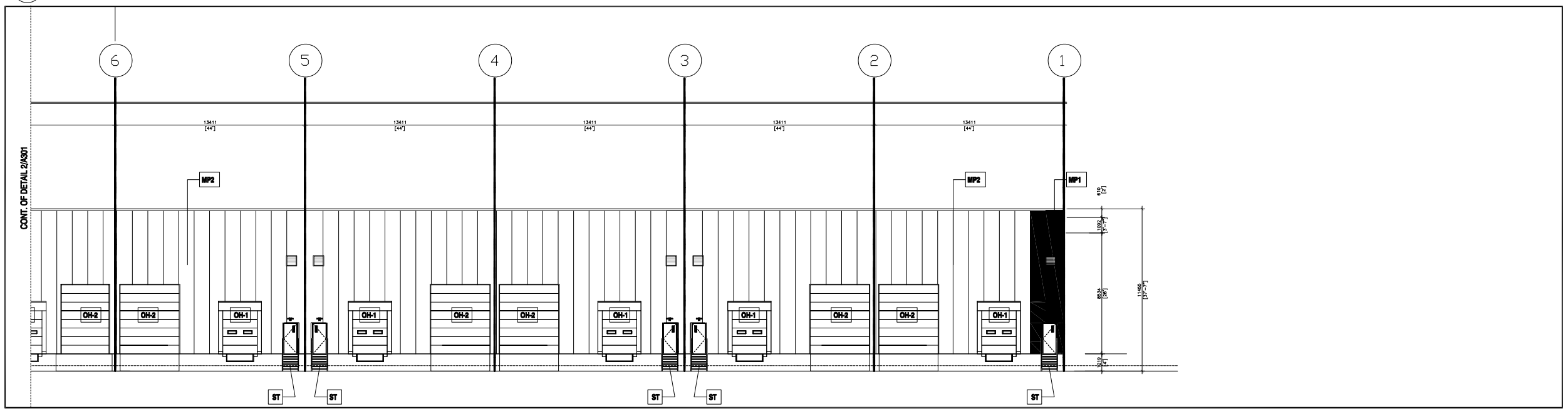
1 A301 FULL NORTH SIDE ELEVATION
SCALE: 1:250

ELEVATION NOTES

AW	Clear Anodized Aluminum Window with Clear Glass
CF	Concrete Foundation Wall
ELF	Exterior wall-mounted light fixture; see Electrical
FDC	Fire Department Connection
GL-C	Clear Glazing, Low-E
GR	Painted Steel Guardrail
MD	Painted Hollow-Metal Door & Steel Frame, colour matching adjacent wall colour.
MP1	Prefinished Metal Panel, Rigel Grey
MP2	Prefinished Metal Panel, Riesling
OH1	Solid, Prefinished, Insulated Overhead Door, complete with loading dock weather seal, dock bumper and dock leveler. 8'W x 10'H
OH2	Solid, Prefinished, Insulated Overhead Door. 14'W x 16'H
SL	Galvanized Steel Ladder, complete with Galvanized Steel Cage
ST	Galvanized Steel Stair



2 A301 PART NORTH SIDE ELEVATION (Part 01)
SCALE: 1:150



3 A301 PART NORTH SIDE ELEVATION (Part 02)
SCALE: 1:150

STUDIO G68 LTD
Cell:+1 613-501-3888 Email: gar.studio68@outlook.com
Ottawa ON, Canada K1V 8T7

RP ANCHETA ARCHITECT
24 ROKEBY DRIVE, TORONTO ONTARIO, M3H 3R2 TEL: TEL: 4164324002
EMAIL: ARCHRENA@gmail.com

DATE	ISSUED FOR	REV
2025-04-09	ISSUED FOR CLIENT REVIEW	1
2025-04-11	ISSUED FOR STRUCT.,MEP, LANDSCAPE & CIVIL	2
2025-05-01	ISSUED FOR CLIENTS, LANDSCAPE & CIVIL	3
2025-05-12	ISSUED FOR CLIENTS & COORDINATION	4
2025-06-24	ISSUED FOR CLIENTS & COORDINATION	5
2025-07-29	ISSUED FOR CLIENTS for SPC	6
2025-08-07	ISSUED FOR CLIENTS (Update SITE PLAN)	7
2025-08-08	ISSUED FOR CLIENTS (Updated SITE PLAN)	8
2025-12-03	ISSUED FOR CITY FOR SITE PLAN APPROVAL	9

This drawing has been prepared solely for the use of J.I.I. CANADA-EAST and there are no representations of any kind made by

GENERAL NOTES:
1. THE CONTRACTOR SHALL CHECK AND VERIFY ALL DIMENSIONS AND REPORT ALL ERRORS AND OMISSIONS TO THE ARCHITECT FOR HIS WRITTEN PERMISSION BEFORE PROCEEDING WITH THE WORK.
2. NOT FOR CONSTRUCTION UNLESS SIGNED BY THE ARCHITECT
3. NOT TO BE SCALED OR REPRODUCED WITHOUT WRITTEN PERMISSION

Consultants

3 **Surveyor:** TOPOGRAPHICAL PLAN OF
PART OF LOT 12
CONCESSION 3
GEOGRAPHIC TOWNSHIP OF HUNTLEY
CITY OF OTTAWA.
Prepared by Annis, O'Sullivan, Vollebekk Ltd.
On-Site Work Completed on June 6, 2022

Planner: P-Squared Concepts
2200 Thurston Dr #203, Ottawa, ON K1G 6E1
planning@p2concepts.ca
613-695-0192

Civil: Fritz Gérald St Fleur
fritzgerald.stfleur@gmail.com
613-327-9862

2 **Landscape:** CIVITAS GROUP Civitas Architecture Inc
14 Chamberlain Ave, Ottawa ON K1S1V9 (613) 742-7482

Seal(s)

Project Manager	Drawn JV
Project Leader	Checked GF

Client
MEGHA HOLDINGS
401 COVENTRY ROAD, OTTAWA
K1K 2C5

Project
PROPOSED 1 STOREY WAREHOUSE
3113 CARP ROAD, OTTAWA
K0A 1L0

1 **Drawing Title**
BUILDING ELEVATIONS

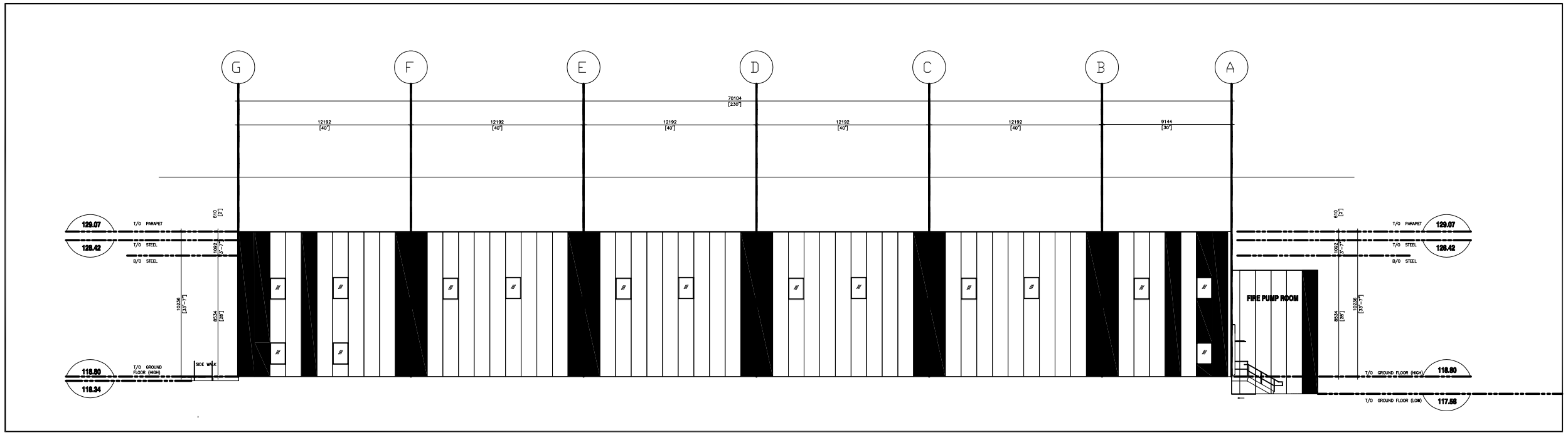
Scale

Project No. 24/06

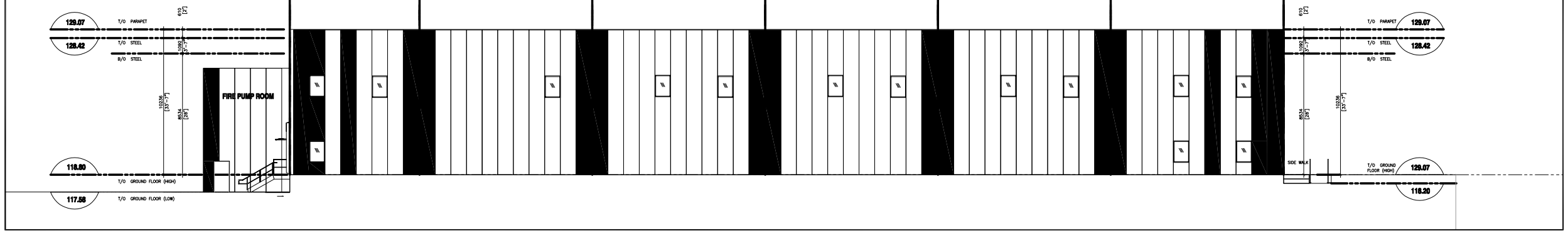
Drawing No. A-301

2023-05-02 9:16:39 AM

ISO A1 Title Block - v 2023 - Rev (Sept/23) - Copyright © 2023



1 A302 **FULL WEST SIDE ELEVATION**
SCALE: 1:150



2 A302 **FULL EAST SIDE ELEVATION**
SCALE: 1:150

ELEVATION NOTES

AW	Clear Anodized Aluminum Window with Clear Glass
CF	Concrete Foundation Wall
ELF	Exterior wall-mounted light fixture; see Electrical
FDC	Fire Department Connection
GL-C	Clear Glazing, Low-E
GR	Painted Steel Guardrail
MD	Painted Hollow-Metal Door & Steel Frame, colour matching adjacent wall colour.
MP1	Prefinished Metal Panel, Rigel Grey
MP2	Prefinished Metal Panel, Riesling
OH1	Solid, Prefinished, Insulated Overhead Door, complete with loading dock weather seal, dock bumper and dock leveler. 8'W x 10'H
OH2	Solid, Prefinished, Insulated Overhead Door. 14'W x 16'H
SL	Galvanized Steel Ladder, complete with Galvanized Steel Cage
ST	Galvanized Steel Stair

STUDIO G68 LTD
Cell: +1 613-501-3888
Email: gar.studio68@outlook.com
Ottawa ON, Canada K1V 8T7

RP ANCHETA ARCHITECT
31 MONTMORENCY DRIVE, TORONTO ONTARIO, M3H 2R2
TEL/ tel: 4164424202
EMAIL: ARCHITECTRP@GMAIL.COM

DATE	ISSUED FOR	REV
2025-04-09	ISSUED FOR CLIENT REVIEW	1
2025-04-11	ISSUED FOR STRUCT.,MEP, LANDSCAPE & CIVIL	2
2025-05-01	ISSUED FOR CLIENTS, LANDSCAPE & CIVIL	3
2025-05-12	ISSUED FOR CLIENTS & COORDINATION	4
2025-06-24	ISSUED FOR CLIENTS & COORDINATION	5
2025-07-29	ISSUED FOR CLIENTS for SPC	6
2025-08-07	ISSUED FOR CLIENTS (Update SITE PLAN)	7
2025-08-08	ISSUED FOR CLIENTS (Updated SITE PLAN)	8
2025-13-03	ISSUED FOR CITY FOR SITE PLAN APPROVAL	9

This drawing has been prepared solely for the use of J.I.L CANADA-EAST and there are no representations of any kind made by

GENERAL NOTES:
1. THE CONTRACTOR SHALL CHECK AND VERIFY ALL DIMENSIONS AND REPORT ALL ERRORS AND OMISSIONS TO THE ARCHITECT FOR HIS WRITTEN PERMISSION BEFORE PROCEEDING WITH THE WORK.
2. NOT FOR CONSTRUCTION UNLESS SIGNED BY THE ARCHITECT
3. NOT TO BE SCALED OR REPRODUCED WITHOUT WRITTEN PERMISSION

Consultants

3 **Surveyor:** TOPOGRAPHICAL PLAN OF
PART OF LOT 12
CONCESSION 3
GEOGRAPHIC TOWNSHIP OF HUNTLEY
CITY OF OTTAWA
Prepared by Annis, O'Sullivan, Vollebekk Ltd.
On-Site Work Completed on June 6, 2022

Planner: P-Squared Concepts
2200 Thurston Dr #201, Ottawa, ON K1G 6E1
planning@p2concepts.ca
613-695-0192

2 **Civil:** Fritz Gérald St Fleur
fritzgerald.stfleur@gmail.com
613-327-9862

Landscape: CIVITAS GROUP Civitas Architecture Inc
14 Chamberlain Ave, Ottawa ON K1S1V9 (613) 742-7482

Seal(s)

Project Manager	Drawn JV
Project Leader	Checked GF

Client
MEGHA HOLDINGS
401 COVENTRY ROAD, OTTAWA
K1K 2C5

Project
PROPOSED 1 STOREY WAREHOUSE
3113 CARP ROAD, OTTAWA
K0A 1L0

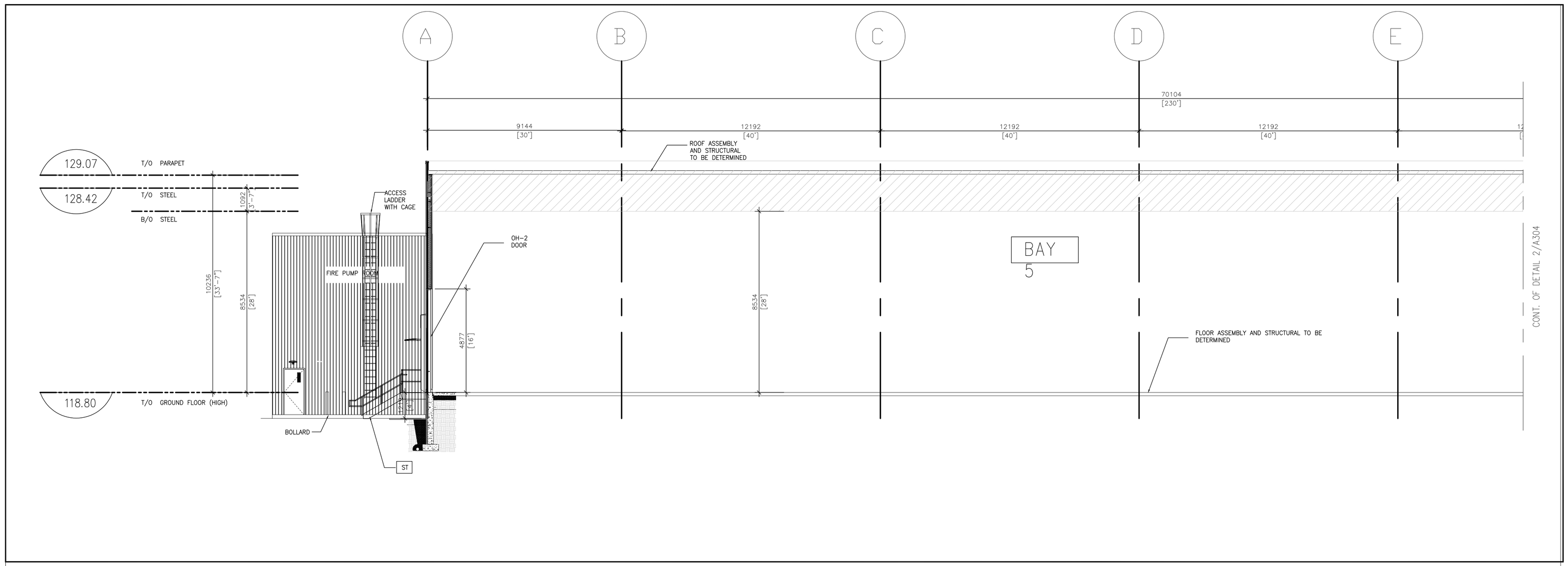
1 **Drawing Title**
BUILDING ELEVATIONS

Scale

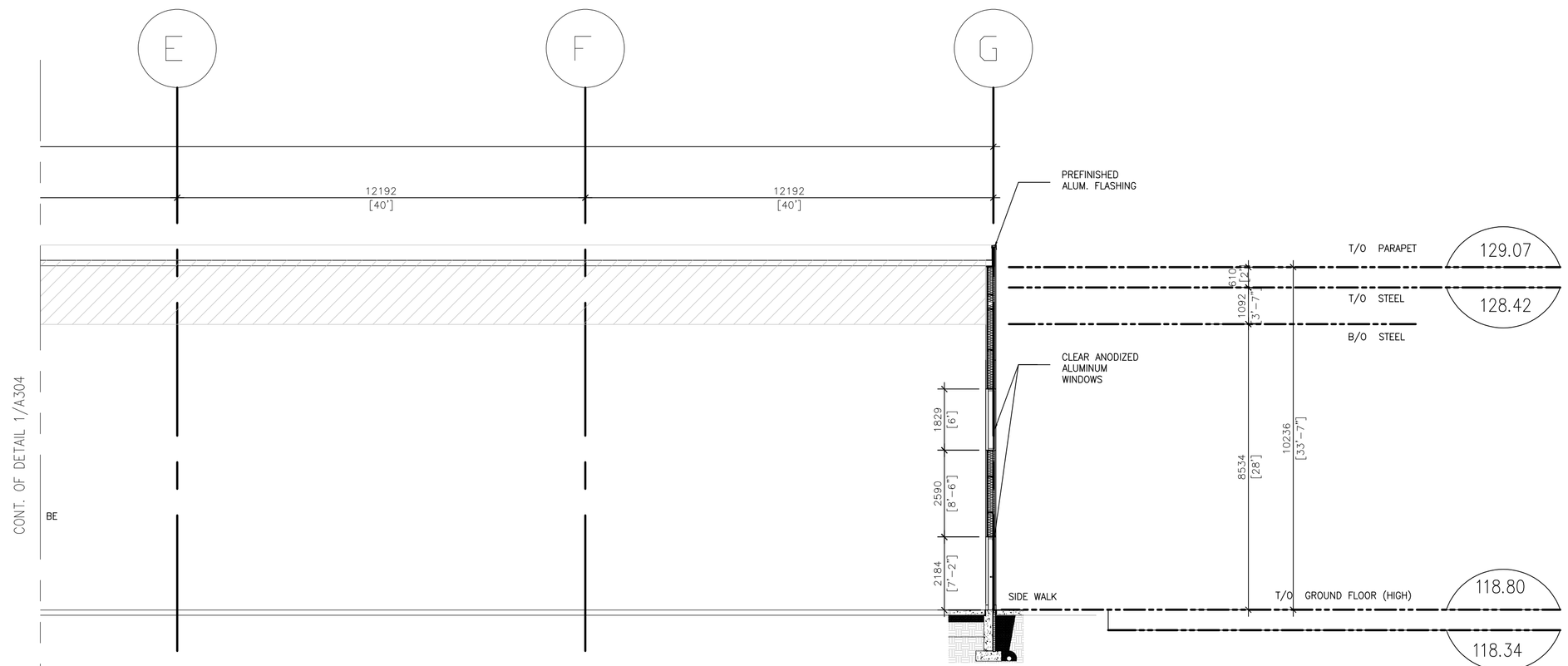
Project No. 24/06

Drawing No. A-302

ISO A1 Title Block - v.2023 - Rev (Sept'23) - Copyright © 2023



1 / A304 BUILDING SECTION
SCALE: 1:100



2 / A304 BUILDING SECTION
SCALE: 1:100

STUDIO G68 LTD
Cell:+1 613-501-3888 Email: gar.studio68@outlook.com
Ottawa,ON, Canada K1V 8T7

RP ANCHETA ARCHITECT
24 MONCRIEFF DRIVE, TORONTO ONTARIO, M9M 2R2 TEL.No. 416-834-0202 Email:ARCHRENATO@GMAIL.COM

DATE	ISSUED FOR	REV
2025-04-09	ISSUED FOR CLIENT REVIEW	1
2025-04-11	ISSUED FOR STRUCT.,MEP, LANDSCAPE & CIVIL	2
2025-05-01	ISSUED FOR CLIENTS, LANDSCAPE & CIVIL	3
2025-06-12	ISSUED FOR CLIENTS & COORDINATION	4
2025-06-24	ISSUED FOR CLIENTS & COORDINATION	5
2025-07-09	ISSUED FOR CLIENTS for SPC	6
2025-08-07	ISSUED FOR CLIENTS (Update SITE PLAN)	7
2025-08-09	ISSUED FOR CLIENTS (Updated SITE PLAN)	8
2025-12-03	ISSUED FOR CITY FOR SITE PLAN APPROVAL	9

This drawing has been prepared solely for the use of J.I.L CANADA-EAST and there are no representations of any kind made by

GENERAL NOTES:
1. THE CONTRACTOR SHALL CHECK AND VERIFY ALL DIMENSIONS AND REPORT ALL ERRORS AND OMISSIONS TO THE ARCHITECT FOR HIS WRITTEN PERMISSION BEFORE PROCEEDING WITH THE WORK.
2. NOT FOR CONSTRUCTION UNLESS SIGNED BY THE ARCHITECT
3. NOT TO BE SCALED OR REPRODUCED WITHOUT WRITTEN PERMISSION

Consultants

Surveyor: *TOPOGRAPHICAL PLAN OF*
PART OF LOT 12
CONCESSION 3
GEOGRAPHIC TOWNSHIP OF HUNTLEY
CITY OF OTTAWA
Prepared by Annis, O'Sullivan, Vollebekk Ltd.
On-Site Work Completed on June 6, 2022

Planner: **P-Squared Concepts**
2200 Thurston Dr #203, Ottawa, ON K1G 6E1
planning@p2concepts.ca
613-695-0192

Civil: **Fritz Gérald St Fleur**
fritzgerald.stfleur@gmail.com
613-327-9862

Landscape:
CIVITAS GROUP Civitas Architecture Inc
14 Chamberlain Ave, Ottawa ON K1S1V9 (613) 742-7482

Seal(s)

Project Manager	Drawn JV
Project Leader	Checked GF

Client
MEGHA HOLDINGS
401 COVENTRY ROAD, OTTAWA
K1K 2C5

Project
PROPOSED 1 STOREY WAREHOUSE
3113 CARP ROAD, OTTAWA
K0A 1L0

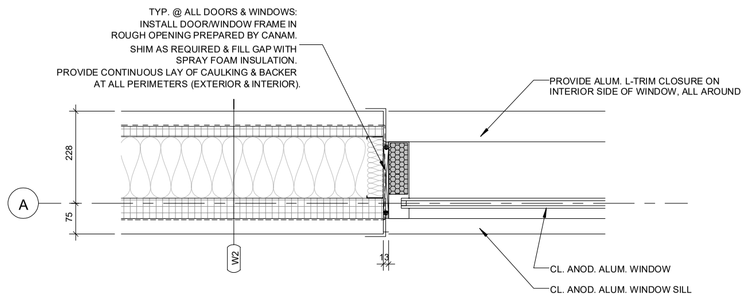
Drawing Title
BUILDING SECTION DETAILS

Scale

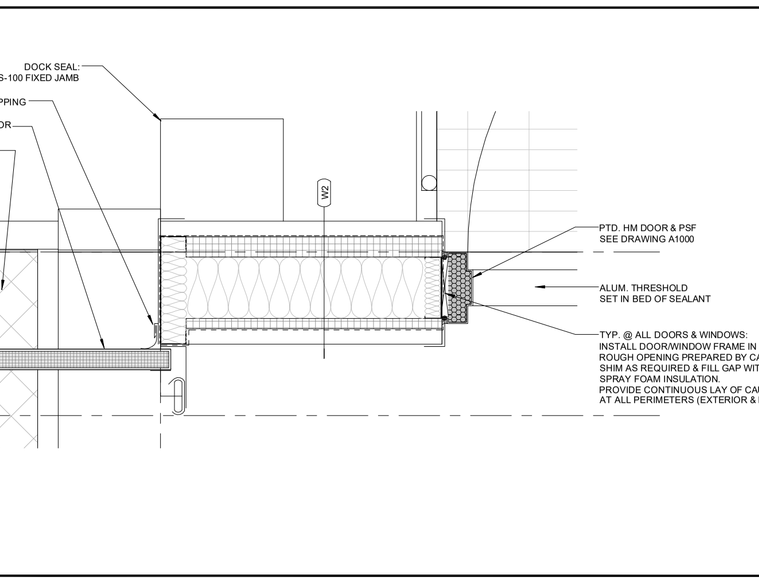
Project No.
24/06

Drawing No.
A-304

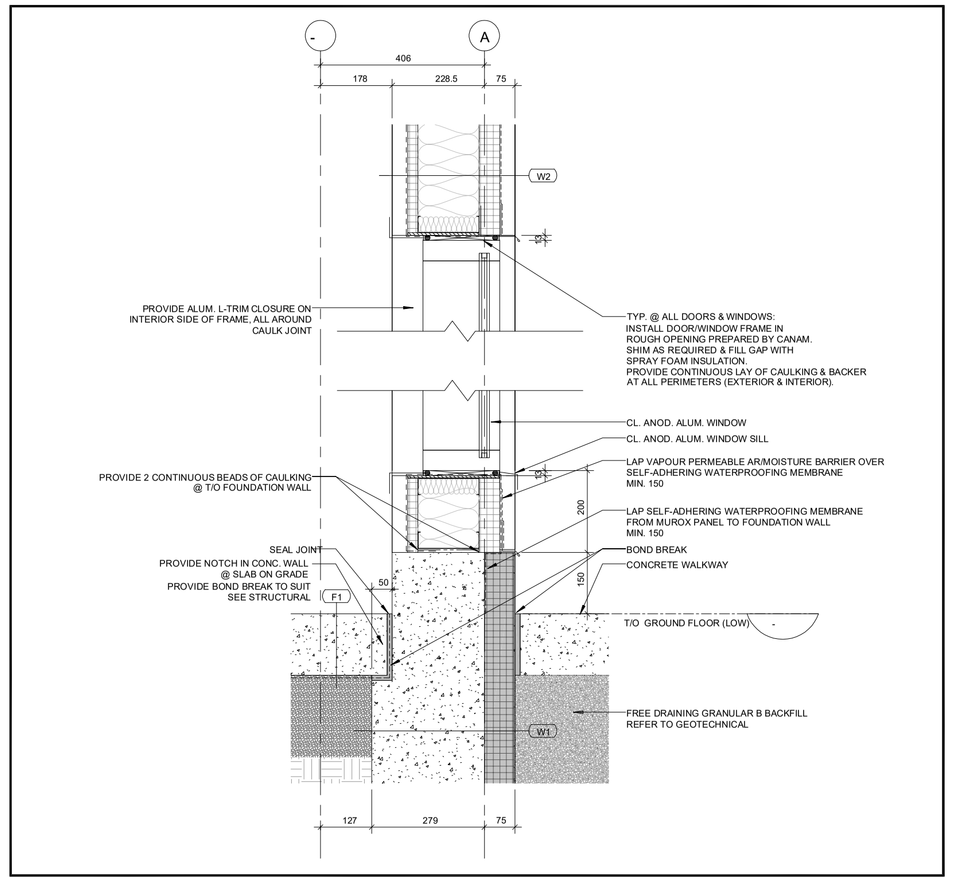
ISO A1 Title Block - v.2023 - Rev (Sept/23) - Copyright © 2023



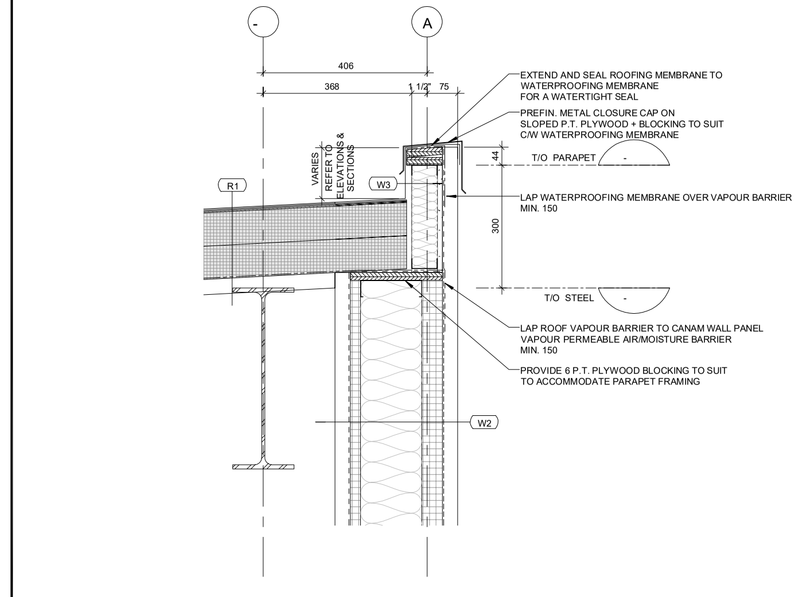
5 A305 JAMB DETAIL @WINDOW
SCALE: 1:10



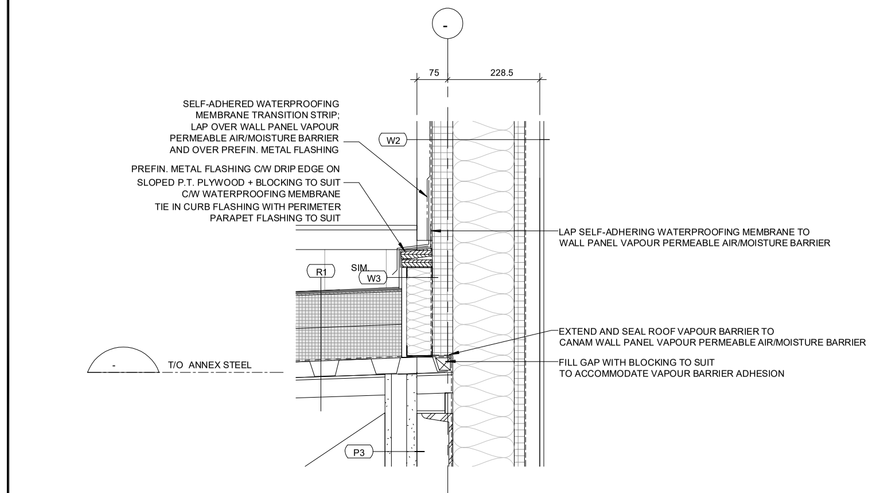
4 A305 JAMB DETAIL @HM DOOR & O/H DOOR
SCALE: 1:10



1 A305 TYP. WALL BASE & WINDOW HEAD & SILL DETAIL
SCALE: 1:10



2 A305 TYP. PARAPET DETAIL
SCALE: 1:10



3 A305 SECTION @ANNEX ROOF CURB
SCALE: 1:10

STUDIO G68 LTD
Cell:+1 613-501-3888 Email: gar.studio68@outlook.com
Ottawa,ON, Canada K1V 8T7

RP ANCHETA ARCHITECT
24 MONCRIEFF DRIVE, TORONTO ONTARIO, M9W 2R2 TEL.No. 416-834-0202
Email:j_ANCHETA@YAHOO.COM

DATE	ISSUED FOR	REV
2025-04-09	ISSUED FOR CLIENT REVIEW	1
2025-04-11	ISSUED FOR STRUCT.,MEP, LANDSCAPE & CIVIL	2
2025-05-01	ISSUED FOR CLIENTS, LANDSCAPE & CIVIL	3
2025-06-12	ISSUED FOR CLIENTS & COORDINATION	4
2025-06-24	ISSUED FOR CLIENTS & COORDINATION	5
2025-07-09	ISSUED FOR CLIENTS for SPC	6
2025-08-07	ISSUED FOR CLIENTS (Update SITE PLAN)	7
2025-08-09	ISSUED FOR CLIENTS (Updated SITE PLAN)	8
2025-12-03	ISSUED FOR CITY FOR SITE PLAN APPROVAL	9

This drawing has been prepared solely for the use of J.I.L CANADA-EAST and there are no representations of any kind made by

GENERAL NOTES:
1. THE CONTRACTOR SHALL CHECK AND VERIFY ALL DIMENSIONS AND REPORT ALL ERRORS AND OMISSIONS TO THE ARCHITECT FOR HIS WRITTEN PERMISSION BEFORE PROCEEDING WITH THE WORK.
2. NOT FOR CONSTRUCTION UNLESS SIGNED BY THE ARCHITECT
3. NOT TO BE SCALED OR REPRODUCED WITHOUT WRITTEN PERMISSION

Consultants

Surveyor: *TOPOGRAPHICAL PLAN OF*
PART OF LOT 12
CONCESSION 3
GEOGRAPHIC TOWNSHIP OF HUNTLEY
CITY OF OTTAWA
Prepared by Annis, O'Sullivan, Vollebekk Ltd.
On-Site Work Completed on June 6, 2022

Planner: **P-Squared Concepts**
2200 Thurston Dr #303, Ottawa, ON K1G 6E1
planning@p2concepts.ca
613-695-0192

Civil: **Fritz Gérald St Fleur**
fritzgerald.stfleur@gmail.com
613-327-9862

Landscape:
CIVITAS GROUP Civitas Architecture Inc
14 Chamberlain Ave, Ottawa ON K1S1V9 (613) 742-7482

Seal(s)

Project Manager	Drawn JV
Project Leader	Checked GF

Client
MEGHA HOLDINGS
401 COVENTRY ROAD, OTTAWA
K1K 2C5

Project
PROPOSED 1 STOREY WAREHOUSE
3113 CARP ROAD, OTTAWA
K0A 1L0

Drawing Title
DETAILS

Scale

Project No.
24/06

Drawing No.
A-305

ISO A1 Title Block - v.2023 - Rev (Sept/23) - Copyright © 2023