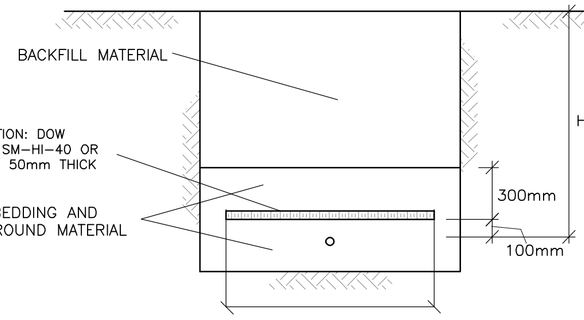

H (DEPTH OF COVER)	INSULATION THICKNESS	W (WIDTH OF INSULATION)
1800 TO 2400mm	50mm	1200mm
1500 TO 1800mm	75mm	1800mm
1200 TO 1500mm	100mm	2400mm

INSULATE SEWER AS INDICATED AND WHERE DEPTH OF COVER COVER IS LESS THAN 2400mm.
PROVIDE A MINIMUM 1200mm COVER.
CENTER INSULATION OVER PIPE.
JOINTS BETWEEN SHEETS OF INSULATION SHALL BE STAGGERED.

INSULATION OF WELL WATER LINE SHALLOW TRENCHES
N.T.S.

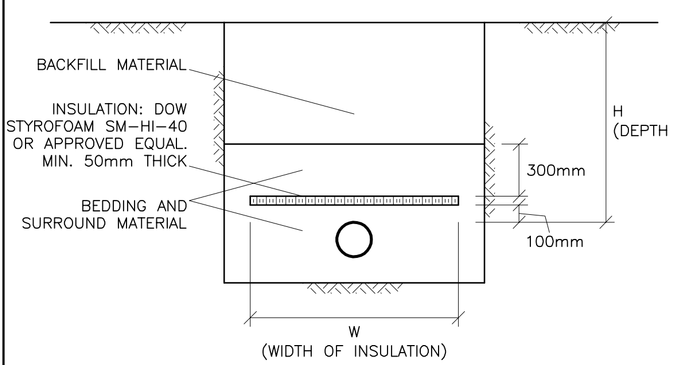

H (DEPTH OF COVER)	INSULATION THICKNESS	W (WIDTH OF INSULATION)
1400 TO 2000mm	50mm	1200mm + DIAMETER OF PIPE
1100 TO 1400mm	75mm	1800mm + DIAMETER OF PIPE
800 TO 1100mm	100mm	2400mm + DIAMETER OF PIPE
LESS THAN 800mm	125mm	3000mm + DIAMETER OF PIPE

INSULATE SEWER AS INDICATED AND WHERE DEPTH OF COVER IS LESS THAN 2000mm.
CENTER INSULATION OVER PIPE.
JOINTS BETWEEN SHEETS OF INSULATION SHALL BE STAGGERED.

INSULATION OF SEWERS IN SHALLOW TRENCHES
AS PER CITY OF OTTAWA DRAWING No. S35
N.T.S

1. GENERAL

1.1 USE BAR SCALE TO CONFIRM ACTUAL PLOT SCALE. EXISTING AND NEW ELEVATIONS AND INVERTS SHOWN ARE GEODETIC AND ARE IN METERS. ALL PIPE DIMENSIONS ARE NOMINAL AND IN MILLIMETERS UNLESS OTHERWISE NOTED.
1.2 UNLESS OTHERWISE STATED "ENGINEER" REFERS TO D. B. GRAY ENGINEERING INC.
1.3 SITE BOUNDARIES AND EXISTING GRADES AND OTHER FEATURES DERIVED FROM TOPOGRAPHIC SURVEY PREPARED BY FAIRHALL MOFFATT & WOODLAND LIMITED JOB No AD19100 REF. No. 5–4M–351. ELEVATIONS ON THE SURVEY PLAN AND THESE DRAWINGS ARE IN METRES AND ARE GEODETIC. JOB BENCHMARK; MAGNETIC NAIL IN ASPHALT LOCATED IN CENTER OF GREELY LANE AT BEND IN ROAD AT THE MOST NORTHERLY CORNER OF PART 4, PLAN 4R–5327 AS SHOWN ON TOPOGRAPHIC PLAN OF SURVEY DATED JULY 26, 2024 HAVING AN ELEVATION OF 99.65 SURVEY MONUMENT USED TO ESTABLISH DATUM : REFERENCES ONTARIO MINISTRY OF NATURAL RESOURCES AND FORESTRY STATION #01919680377 MTM, ZONE 9, NAD83(CSRS 2010.0) COVD28 NORTHING=5015836.213 EASTING= 377529.911 ELEVATION=113.99 LOCATED ALONG MITCH OWENS ROAD BETWEEN BANK STREET AND OLD PRESCOTT ROAD.
IT IS THE RESPONSIBILITY OF THE USER OF THE SURVEY PLAN AND THESE DRAWINGS TO VERIFY THAT THE JOB BENCHMARK HAS NOT BEEN ALTERED OR DISTURBED AND THAT ITS RELATIVE ELEVATION AND DESCRIPTION AGREE WITH THE INFORMATION SHOWN ON SURVEY PLAN AND THESE DRAWINGS.
1.4 REFER TO ARCHITECTURAL AND LANDSCAPE SITE PLANS FOR EXACT LOCATIONS OF BUILDINGS, PAVED AREAS, SIDEWALKS, PLANTERS ETC. LAYOUT SHALL BE COMPLETED BY THE CONTRACTOR AND SHALL BE REVIEWED BY THE OWNER'S REPRESENTATIVE PRIOR TO CONSTRUCTION. AT ALL TIMES THE CONTRACTOR IS RESPONSIBLE FOR THE ACCURACY OF THE LAYOUT INCLUDING LINES AND GRADES.
1.5 REFER TO TREE CONSERVATION REPORT FOR TREE PROTECTION REQUIREMENTS.
1.6 REFERENCE THE LATEST REVISION AND ALL ADDENDUMS OF THE GEOTECHNICAL INVESTIGATION BY CAMBIUM INC REF: 17281–001. CONSTRUCTION SHALL CONFORM TO THE GEOTECHNICAL INVESTIGATION TO THE SATISFACTION OF THE GEOTECHNICAL ENGINEER INCLUDING: SUB–GRADE PREPARATION AND CONSTRUCTION OF THE PAVEMENT STRUCTURE; EXCAVATION AND BACKFILLING; SERVICE TRENCH EXCAVATION AND PIPE BEDDING AND BACKFILL; AND THE COMPACTION OF MATERIALS.
1.7 DRAWINGS ARE TO BE READ IN CONJUNCTION WITH SITE SERVICING & STORMWATER MANAGEMENT REPORT No. 24015 PREPARED BY D. B. GRAY ENGINEERING INC.
1.8 CONSTRUCTION SHALL BE PERFORMED IN ACCORDANCE WITH THE OCCUPATIONAL HEALTH AND SAFETY ACT AND CURRENT CITY OF OTTAWA STANDARD SPECIFICATIONS AND DRAWINGS.
1.9 ONTARIO PROVINCIAL STANDARD SPECIFICATIONS AND DRAWINGS SHALL APPLY WHERE NO CITY OF OTTAWA STANDARD SPECIFICATIONS OR DRAWINGS ARE AVAILABLE.
1.10 REINSTATE AREAS DISTURBED BY CONSTRUCTION TO PRE–CONSTRUCTION CONDITIONS.
1.11 REINSTATE CITY PROPERTIES TO CITY STANDARDS AND TO CITY OF OTTAWA'S SATISFACTION.

2. EROSION AND SEDIMENT CONTROL PLAN

2.1 THE EROSION AND SEDIMENT CONTROL PLAN IS A "LIVING DOCUMENT" AND SHALL BE REVISED IN THE EVENT THE SPECIFIED CONTROL MEASURES ARE NOT SUFFICIENT.
2.2 THE CONTRACTOR SHALL IMPLEMENT BEST MANAGEMENT PRACTICES TO PROVIDE PROTECTION OF THE AREA DRAINAGE SYSTEM AND THE RECEIVING WATER COURSE DURING CONSTRUCTION ACTIVITIES. THIS INCLUDES LIMITING THE AMOUNT OF EXPOSED SOIL, USING SEDIMENT CAPTURE FILTER SOCK INSERTS IN CATCH BASINS AND MANHOLES AND INSTALLING SILT FENCES AND OTHER EFFECTIVE SEDIMENT TRAPS. DO NOT REMOVE UNTIL CONSTRUCTION IS COMPLETE.
2.3 AT ANY MANHOLES OR CATCH BASINS THAT WILL RECEIVE DISCHARGE FROM DE–WATERING OPERATIONS AND ALL NEW CATCH BASINS AS THEY ARE INSTALLED: INSTALL SEDIMENT CAPTURE FILTER SOCK INSERTS (TERRAFIX GEOSYNTHETICS INC SILTSACK OR APPROVED EQUAL). INSPECT AT THE END OF EACH DAY AND AFTER EACH RAINFALL. REMOVE SEDIMENT AS RECOMMENDED BY THE MANUFACTURER. IMMEDIATELY REPAIR OR REPLACE ANY DAMAGED FILTER SOCK INSERTS. DO NOT REMOVE UNTIL CONSTRUCTION IS COMPLETE.
2.4 INSTALL A SILT FENCE BARRIER AROUND STOCKPILED SEDIMENT OR SOIL. PRIOR TO COMMENCEMENT OF CONSTRUCTION INSTALL A SILT FENCE BARRIER AS SHOWN ON PLANS. INSPECT ALL SILT FENCES AT THE END OF EACH DAY AND AFTER EACH RAINFALL. REMOVE SEDIMENT DEPOSITS WHEN THE LEVEL OF DEPOSITS REACHES ONE THIRD THE HEIGHT OF THE FENCE. IMMEDIATELY REPAIR OR REPLACE ANY DAMAGED SECTIONS OF FENCE. DO NOT REMOVE ANY SILT FENCES IN ANY PHASE UNTIL CONSTRUCTION IS COMPLETE.
2.5 ANY MATERIAL DEPOSITED ON A PUBLIC ROAD SHALL BE REMOVED BY SWEEPING AND SHOVELING OR VACUUMING AND DISPOSING SEDIMENT IN A CONTROLLED AREA. DO NOT SWEEP OR HOSE MATERIAL INTO ANY STORMWATER CONVEYANCE SYSTEM.
2.6 CONSTRUCTION IS CONSIDERED COMPLETE WHEN THE FOLLOWING CONDITIONS HAVE BEEN MET:
A. ALL STRUCTURES HAVE BEEN BUILT.
B. ALL HARD SURFACES HAVE BEEN CONSTRUCTED.
C. ALL PROPOSED GRASSED AREAS ARE EITHER SODDED OR HAVE A FULL COVERAGE OF WELL ESTABLISHED TURF AND HAVE HAD A MINIMUM OF ONE FULL GROWING SEASON (MAY 15TH TO SEPTEMBER 15TH).
D. THERE ARE NO AREAS OF EXPOSED EARTH.
E. ALL STOCKPILED MATERIALS HAVE BEEN REMOVED.
2.7 REMOVE EROSION AND SEDIMENT CONTROL MEASURES WHEN CONSTRUCTION IS COMPLETE.

3. GRADING & DRAINAGE

3.1 NEW GRADES TO MATCH EXISTING AT PROPERTY LINE. NO EXCESS DRAINAGE WILL BE DIRECTED TOWARDS THE ADJACENT PROPERTIES DURING OR AFTER CONSTRUCTION. THERE WILL BE NO ALTERATION TO EXISTING GRADE AND DRAINAGE PATTERNS ON PROPERTY LINE.
3.2 ALL AREAS SHALL BE GRADED TO ENSURE ADEQUATE DRAINAGE AWAY FROM BUILDINGS TO CATCH BASINS, SWALES, DITCHES AND OTHER APPROVED DISPOSAL AREAS. GRADING SHALL BE GRADUAL BETWEEN FINISHED SPOT ELEVATIONS SHOWN ON DRAWINGS TO PREVENT PONDING (OTHER THAN PONDING REQUIRED FOR STORMWATER MANAGEMENT).
3.3 WHETHER RESULT OF POOR WORKMANSHIP OR DAMAGE: DEFECTIVE GRADING SHALL BE CORRECTED.
3.4 CONCRETE CURBS SHALL BE CONSTRUCTED TO CITY OF OTTAWA DRAWING NO. SC1.1. CONCRETE SIDEWALK SHALL BE CONSTRUCTED TO CITY OF OTTAWA DRAWING NO. SC4. CONCRETE CURBS WITH CONCRETE SIDEWALK SHALL BE CONSTRUCTED TO CITY OF OTTAWA DRAWING NO. SC1.4, MONOLITHIC CONCRETE CURB AND SIDEWALK SHALL BE CONSTRUCTED TO CITY OF OTTAWA DRAWING NO. SC2. ACCESSIBLE DEPRESSED CURB SHALL BE C/W TACTILE WALKING SURFACE INDICATOR (TWSI) ALL IN ACCORDANCE WITH CITY OF OTTAWA ACCESSIBILITY DESIGN STANDARDS. TWSI SHALL BE INSTALLED AS PER CITY OF OTTAWA SPECIFICATION SECTION F–3511. CONCRETE SIDEWALKS SHALL BE TO CITY OF OTTAWA SPECIFICATION SECTION F–3531. CONCRETE SIDEWALKS SHALL BE 150 mm THICK. SHAPE BED TRUE TO GRADE AND TO PROVIDE CONTINUOUS, UNIFORM BEARING SURFACE FOR PIPE. CLASS C–2. THE AIR ENTRAINMENT SHALL BE 5% TO 8% PRIOR TO PLACEMENT AND THE SLUMP SHALL BE LESS THAN 40 mm ± 20 mm FOR EXTRUDED CONCRETE CURBS AND LESS THAN 90 mm FOR PLACED CONCRETE CURBS AND SIDEWALK.
3.5 WHETHER RESULT OF POOR WORKMANSHIP, USE OF DEFECTIVE PRODUCTS OR DAMAGE: DEFECTIVE PORTIONS OF CURBS, SIDEWALK AND ASPHALT SHALL BE CORRECTED OR REMOVED AND REPLACED.
3.6 ALL PROPOSED RETAINING WALLS SHALL BE SETBACK A MINIMUM 0.15m FROM PROPERTY LINE INCLUDING THE WALL FOUNDATION AND FOOTINGS. ALL PROPOSED RETAINING WALLS GREATER THAN 1.0m IN HEIGHT SHALL BE DESIGNED BY A PROFESSIONAL ENGINEER REGISTERED IN ONTARIO. RETAINING WALLS OVER 0.6 m IN HEIGHT MAY REQUIRE A GUARD RAIL (SEE ARCHITECTURAL).
3.7 CULVERTS SHALL BE HDPE OR CORRUGATED STEEL ROUND AND 500mm IN DIAMETER. HDPE CULVERTS TO CITY OF OTTAWA STANDARDS AND SPECIFICATIONS AND TO OPSS 1840 AND CSA B182.8 OR 182.6. MINIMUM 320 kPa STIFFNESS AT 5% DEFLECTION; JOINTS SHALL BE SOL–TIGHT OR BETTER (BOSS 2000 OR APPROVED EQUAL). CORRUGATED STEEL CULVERTS SHALL BE 2.0 mm THICK ALUMINIZED TYPE 2 TO CITY OF OTTAWA STANDARDS AND SPECIFICATIONS AND TO OPSS 1801 AND OPSD 805.010 AND CSA G401. ALL CULVERTS WITHIN PAVED AREAS SHALL HAVE 5:1 FROST TAPERS FROM THE INVERT OF THE CULVERT TO THE PAVEMENT SUB–GRADE.
3.8 RIP RAP: PLACE RIP–RAP 300mm THICK AS INDICATED ON PLANS AS PER OPSS 511 AND OPSD 810.010 AND/OR 810.020. USE QUARRIED STONE 200MM TO 300MM IN DIAMETER. AREA TO BE RIP RAPPED SHALL BE EXCAVATED AND FINE GRADED TO A UNIFORM AND EVEN SURFACE TO PROVIDE ADEQUATE FOUNDATION. FILL AND THOROUGHLY COMPACT DEPRESSIONS. WHERE RIP RAP IS TO BE PLACED ON SLOPES, EXCAVATE TRENCH AT TOE OF SLOPE. PLACE GEOTEXTILE FABRIC ON PREPARED SURFACE. GEOTEXTILE FABRIC SHALL EXTEND A MINIMUM 300mm BEYOND THE EXTENT OF THE RIP RAP IN ALL DIRECTIONS. PLACE RIP RAP ON FABRIC CAREFULLY, TO AVOID PUNCTURING FABRIC. PLACE RIP RAP IN A SET AND STABLE MANNER. ROCK SHALL BE PLACED, STARTING AT THE LOWER END OF THE SLOPE. THE LARGEST ROCKS OBTAINABLE SHALL BE USED AND PLACED IN THE BOTTOM COURSES AND FOR USE AS HEADERS THROUGH SUBSEQUENT COURSES. THEY SHALL BE LAID CLOSELY AND SUCH THAT THEY WILL PROVIDE A REASONABLE SEMBLANCE OF COURSES. FILL VOIDS WITH ROCK SPALLS OR COBBLES. FINNISH SURFACE EVEN, FREE OF LARGE OPENINGS AND NEAT IN APPEARANCE.
3.9 GEOTEXTILE FABRIC: TO OPSS 1860. WOVEN SYNTHETIC FIBRE FABRIC SHALL BE USED IN SILT FENCE BARRIER (GEOSYNTHETIC HD105 OR APPROVED EQUAL). NON–WOVEN SYNTHETIC FIBRE FABRIC 1.75mm THICK, 200g/sq.m. SHALL BE USED FOR MATERIAL SEPARATION. SUBDRAIN / DRY WELL / INFILTRATION TRENCH APPLICATIONS: GEOSYNTHETIC TERRAFIX 360R OR APPROVED EQUAL. RIP RAP APPLICATIONS: GEOSYNTHETIC TERRAFIX 420R OR APPROVED EQUAL. BIAXIAL GEOGRID FABRIC: GEOSYNTHETIC TERRAFIX TBX2500 OR APPROVED EQUAL. PRIOR TO INSTALLATION SUBMIT SHOP DRAWING TO ENGINEER FOR APPROVAL. GEOTEXTILE FABRIC SHALL BE FREE OF TEARS AND RESISTANT TO DETERIORATION BY ULTRA VIOLET AND HEAT EXPOSURE. PLACE GEOTEXTILE MATERIAL BY UNROLLING ONTO GRADED SURFACE, SMOOTH AND FREE OF TENSION STRESS, FOLDS, WRINKLES AND CREASES. PLACE GEOTEXTILE MATERIAL ON SLOPING SURFACES IN ONE CONTINUOUS LENGTH FROM TOE OF SLOPE TO UPPER EXTENT OF GEOTEXTILE. OVERLAP EACH SUCCESSIVE STRIP OF GEOTEXTILE 600mm OVER PREVIOUSLY LAID STRIP IN DIRECTION OF FLOW. ALTERNATIVELY THE FABRIC MAY BE LAPPED A MINIMUM OF 300mm AND PINNED TOGETHER. PROTECT INSTALLED GEOTEXTILE MATERIAL FROM DISPLACEMENT, DAMAGE OR DETERIORATION BEFORE, DURING AND AFTER PLACEMENT OF MATERIAL LAYERS AFTER INSTALLATION, COVER WITH OVERLYING LAYER WITHIN 4 HOURS OF PLACEMENT. DURING DELIVERY AND STORAGE, PROTECT GEOTEXTILES FROM DIRECT SUNLIGHT, ULTRAVIOLET RAYS, EXCESSIVE HEAT, MUD, DIRT, DUST, DEBRIS AND RODENTS. VEHICULAR TRAFFIC NOT PERMITTED DIRECTLY ON GEOTEXTILE. AVOID PUNCTURING GEOTEXTILE. REPLACE DAMAGED OR DETERIORATED GEOTEXTILE.

4. SITE SERVICES

4.1 THE EXISTING WELLS SHALL BE DECOMMISSIONED BY A LICENSED WELL CONTRACTOR IN ACCORDANCE WITH ONTARIO REGULATION 903. UPON COMPLETION PREPARE A WELL RECORD FOR THE ABANDONED WELL. A COPY OF THE WELL RECORD SHALL BE DELIVERED TO THE OWNER OF THE LAND.
4.2 THE NEW WELL SHALL CONSTRUCTED BY A LICENSED WELL CONTRACTOR. GRADES AROUND THE WELL SHALL BE AT AN ELEVATION HIGHER THAN THE IMMEDIATELY SURROUNDING AREA AND THE AREA AROUND THE WELL SHALL BE GRADED SUCH THAT SURFACE DRAINAGE WILL NOT POND IN THE VICINITY OF THE WELL. THE WATERTIGHT STEEL WELL CASING SHALL EXTEND A MINIMUM 40 cm ABOVE THE HIGHEST POINT ON THE GROUND SURFACE WITHIN 3 m RADIALLY FROM THE OUTSIDE OF THE CASING. ALL CONNECTIONS (WATERLINE AND ELECTRICAL) THROUGH THE WELL CASING SHALL BE WATERTIGHT.
4.3 PROVIDE A MINIMUM 2.4 m COVER OVER WELL WATER LINE. WHERE THE MINIMUM COVER IS NOT POSSIBLE INSULATE AS PER DETAIL. WHERE LESS THAN 2.4 m CLEARANCE FROM AN OPEN STRUCTURE (EG. MANHOLES, CATCH BASINS & WINDOW WELLS) PLACE INSULATION AROUND WELL WATER LINE AS PER CITY OF OTTAWA DWG. No. W23.
4.4 ALL SEWER MATERIALS AND CONSTRUCTION METHODS TO CITY OF OTTAWA STANDARDS AND ONTARIO PROVINCIAL STANDARDS SPECIFICATIONS (OPSS & OPSD). SEWER MATERIAL SHALL BE PVC SDR–35 (SDR–28 FOR DIAMETERS 150mm OR LESS) AND SHALL CONFORM TO CSA B182.2 AND SHALL HAVE BELL AND SPIGOT JOINTS WITH RUBBER GASKETS.
4.5 SEWERS SHALL HAVE A MINIMUM 1.8m OF COVER. WHERE THE MINIMUM COVER IS NOT POSSIBLE INSULATE AS INDICATED AND AS PER DETAIL.
4.6 MANHOLES & CATCH BASINS:
A. PRECAST MANHOLE UNITS: TO OPSS 1351 AND OPSD 701.010 WITH BASE SLAB OR MONOLITHIC BASE. TOP SECTIONS ECCENTRIC CONE OR FLAT LAB TOP TYPE WITH OPENING OFFSET FOR VERTICAL LADDER INSTALLATION.
B. MANHOLE STEPS: TO OPSD 405.01
C. ADJUSTING RINGS: TO ASTM C 478M.
D. ALUMINUM SURFACES IN CONTACT WITH OR CAST INTO CONCRETE SHALL HAVE POLYETHYLENE ANCHOR INSULATING SLEEVES.
E. PRECAST CATCH BASIN SECTIONS: TO OPSS 1351.
F. JOINTS: SHALL BE MADE WATERTIGHT USING BUTYL BASED, FLEXIBLE WATERSTOP/JOINT SEALANT MATERIAL.
G. STORM SEWERS: MANHOLES SHALL HAVE A 300mm SUMP AND CATCH BASINS AND DITCH INLETS SHALL HAVE A 600mm SUMP.
H. FRAMES, GRATES AND COVERS TO CITY OF OTTAWA DRAWINGS OR OPSD (AS PER CATCH BASIN & MANHOLE SCHEDULE). GRATES AND COVERS TO BEAR EVENLY ON FRAMES.
I. GRANULAR BEDDING AND BACKFILL: OPSS GRANULAR A. RE–CYLCLED GRANULAR MATERIALS ARE NOT PERMITTED.
G. PRIOR TO INSTALLATION SUBMIT SHOP DRAWINGS TO THE ENGINEER FOR REVIEW.
4.7 AS INDICATED ON PLANS: AT ALL CATCH BASINS AND CATCH BASIN MANHOLES PROVIDE MINIMUM 3m LONG, 150mm DIAMETER, PERFORATED SUB–DRAINS AT THE SUB–GRADE LEVEL: HDPE C/W FILTER FABRIC SOCK & END PLUG (BOSS 1000 OR APPROVED EQUAL).
4.8 WATER FILL STATION / WATER SUPPLY FOR FIRE FIGHTING STORAGE TANKS, CHUTE WITH FIRE FITTINGS AND DRAW PIPES AS PER CITY STANDARDS AND CITY DRAWING Nos. W51 & W52 SUPPLY AND INSTALL A LOW WATER LEVEL FLOAT ALARM (AUDIBLE AND VISUAL) THAT IS ACTIVATED WHEN THE WATER LEVEL DROPS MORE THAN 300 mm BELOW THE TOP OF THE TANK. CONNECT MINIMUM 68,000 LITRE (±10,000 GAL) CONCRETE TANKS WITH 250 mm DIAMETER PVC DR25 PIPE (IPEX BLUE BRUTE OR APPROVED EQUAL). CORE DRILL OPENINGS IN TANKS AND MAKE JOINTS WATERTIGHT BETWEEN TANK AND PIPE. AS INDICATED ON PLANS: TANKS SHALL EITHER HAVE A CHUTE AND A DRAW PIPE OR SHALL HAVE AN ACCESS OPENING WITH A MINIMUM 100 mm "CANDY CANE" VENT C/W WITH RODENT SCREEN. ANCHOR TANKS TO PREVENT UPLIFT FROM HYDROSTATIC PRESSURES USING A METHOD APPROVED BY TANK MANUFACTURER. HANDLE AND INSTALL FIRE STORAGE TANKS USING METHODS APPROVED BY THE TANK MANUFACTURER AND AS FOLLOWS (IN THE EVENT OF A CONFLICT, THE METHOD APPROVED BY THE MANUFACTURER SHALL BE USED):
A. PLACE TANK PLUMB AND TRUE TO ALIGNMENT AND GRADE.
B. SET TANK ON MINIMUM 300 mm OF OPSS GRANULAR A COMPACTED TO 100% CORRECTED MAXIMUM DRY DENSITY OR AS DIRECTED BY MANUFACTURER. RE–CYLCLED GRANULAR MATERIALS ARE NOT PERMITTED.
C. PLACE GRANULAR BACKFILL MATERIALS IN A UNIFORM LAYERS TO COMPACTED THICKNESS OF 150 mm, COMPACT TO 95% CORRECTED MAXIMUM DRY DENSITY.
D. PLACE LAYERS SIMULTANEOUSLY ON BOTH SIDES OF INSTALLED WORK TO EQUALIZE LOADING.
D. MAKE ALL JOINTS WATERTIGHT.
E. PERFORM FIELD LEAKAGE TESTS ON ALL TANKS AND CONNECTING PIPES COMPLETED IN ACCORDANCE WITH OPSS 407 (MAINTENANCE HOLES & VALVE CHAMBERS) & OPSS 410 (SEWERS). REPAIR AND RETEST AS REQUIRED. REPAIR VISIBLE LEAKS REGARDLESS OF TEST RESULTS.
4.9 THE EXISTING SEPTIC SYSTEM SHALL BE DE–COMMISSIONED TO THE SATISFACTION OF THE DIRECTOR OF THE OTTAWA SEPTIC SYSTEM OFFICE (OSSO). SUBMIT THE SEPTIC SYSTEM DE–COMMISSIONING FORM TO THE OSSO. THE SEPTIC TANK SHALL BE PUMPED OUT AND EMPTIED BY A REGISTERED SEWAGE HAULER PRIOR TO DECOMMISSIONING. THE SEPTIC TANK AND PUMP CHAMBER SHALL BE REMOVED FROM THE SITE AND DISPOSED OF AT A LICENSED FACILITY. ELECTRICAL DEVICES CONTAINING MERCURY SHALL BE REMOVED AND DISPOSED OF IN A LICENSED HAZARDOUS WASTE DISPOSAL FACILITY. THE DISTRIBUTION PIPES IN THE LEACHING BED SHALL BE DISPOSED AT A LICENSED WASTE DISPOSAL SITE. EXCAVATED CONTAMINATED SOIL SHALL BE SPREAD OR STOCKPILED ON SITE TO THE SATISFACTION OF THE OSSO OR DISPOSED OF IN A LICENSED WASTE DISPOSAL SITE. REQUEST AN INSPECTION BY THE OSSO. DELIVER THE APPROVED SEPTIC SYSTEM DECOMMISSIONING FORM TO THE OWNER OF THE LAND.
4.10 CLASS 4 SEWAGE SYSTEM:
THE PROPOSED CLASS 4 SEWAGE SYSTEM, DESIGNED FOR A TOTAL DAILY SEWAGE FLOW OF 1,800 L/DAY, SHALL CONSIST OF A WATERLOO BIOFILTER ANAEROBIC DIGESTER C/W INTERNAL PUMP & PUMP CHAMBER TIME DOSING TO THE BIOFILTER; WATERLOO BIOFILTER TREATMENT UNIT INCLUDING A PUMP DOSING TO THE WATERNOX TANK AND RECIRCULATING TO THE ANAEROBIC DIGESTER; WATERNOX–LS NITRATE REDUCTION UNIT; AND TYPE "A" DISPERSAL BED. SYSTEM SHALL CONFORM TO TO WATERLOO BIOFILTER SPECIFICATIONS AND TO THE REQUIREMENTS OF THE ONTARIO BUILDING CODE (OBC). THE SEWAGE SYSTEM SHALL BE CONSTRUCTED BY A REGISTERED SEWAGE SYSTEM INSTALLER AND SHALL BE INSTALLED, COMMISSIONED, MAINTAINED AND SERVICED BY MANUFACTURER TRAINED AND AUTHORIZED AGENTS OR EMPLOYEES. HANDLE AND INSTALL TANKS USING METHODS APPROVED BY THE TANK MANUFACTURER AND AS FOLLOWS (IN THE EVENT OF A CONFLICT, THE METHOD APPROVED BY THE MANUFACTURER SHALL BE USED):
THE PROPOSED CLASS 4 SEWAGE SYSTEM SHALL CONSIST OF A 5,400 L (MINIMUM) SEPTIC TANK; ECOFLO BIOFILTER (STB–650BR PUMPED UNIT); AND TYPE "A" DISPERSAL BED AND SHALL CONFORM TO THE REQUIREMENTS OF THE ONTARIO BUILDING CODE (OBC). THE SEWAGE SYSTEM SHALL BE CONSTRUCTED BY A REGISTERED SEWAGE SYSTEM INSTALLER. THE ECOFLO BIOFILTER SYSTEM SHALL BE INSTALLED, MAINTAINED AND SERVICED BY MANUFACTURER TRAINED AND AUTHORIZED AGENTS OR EMPLOYEES. THE SEPTIC TANK SHALL CONFORM TO THE REQUIREMENTS OF CSA B66 AND THE OBC AND SHALL BE FITTED WITH AN EFFLUENT FILTER THAT SCREENS OUT PARTICLES LARGER THAN 3.2 mm AND AS RECOMMENDED BY THE MANUFACTURER. HANDLE AND INSTALL SEPTIC TANK USING METHODS APPROVED BY THE TANK MANUFACTURER AND AS FOLLOWS (IN THE EVENT OF A CONFLICT, THE METHOD APPROVED BY THE MANUFACTURER SHALL BE USED):
A. PLACE TANK PLUMB AND TRUE TO ALIGNMENT AND GRADE.
B. TOP OF TANK SHALL BE A MINIMUM 600mm AND A MAXIMUM 1200 mm BELOW FINISHED GRADE OR AS PER MANUFACTURER'S RECOMMENDATIONS. INSTALL MANUFACTURER SUPPLIED PRE–CAST CONCRETE ACCESS RISERS TO EXTEND ACCESS AS PER MANUFACTURER'S RECOMMENDATIONS.
C. SET TANK ON MINIMUM 150 mm OF GRANULAR A COMPACTED TO 100% CORRECTED MAXIMUM DRY DENSITY OR AS DIRECTED BY MANUFACTURER.
D. PLACE GRANULAR BACKFILL MATERIALS IN A UNIFORM LAYERS TO COMPACTED THICKNESS OF 150MM, COMPACT TO 95% CORRECTED MAXIMUM DRY DENSITY. BUILD A 3H:1V FROST TAPER WITHIN THE UPPER 1.2M.
E. PLACE LAYERS SIMULTANEOUSLY ON BOTH SIDES OF INSTALLED WORK TO EQUALIZE LOADING.
F. ANCHOR TANK TO PREVENT UPLIFT FROM HYDROSTATIC PRESSURES USING A METHOD APPROVED BY TANK MANUFACTURER.
G. MAKE JOINTS WATERTIGHT BETWEEN TANK AND PIPE.

5. CONSTRUCTION:

5.1 PRIOR TO COMMENCING WORK:
A. OBTAIN AND PAY FOR ALL NECESSARY PERMITS AND APPROVALS FROM THE AUTHORITIES.
B. SIZE, DEPTH AND LOCATION OF EXISTING INFRASTRUCTURE (SERVICES, UTILITIES, AND STRUCTURES) AND ARE NOT NECESSARILY SHOWN ON DRAWINGS AND THOSE INDICATED ON THE DRAWINGS ARE DERIVED FROM AVAILABLE INFORMATION AND ARE FOR GUIDANCE ONLY AND MUST BE CONFIRMED ON SITE BEFORE COMMENCING WORK. COMPLETENESS AND ACCURACY ARE NOT GUARANTEED. NOTIFY ALL APPLICABLE OWNERS, UTILITY COMPANIES AND AUTHORITIES HAVING JURISDICTION OF PROPOSED WORK AND LOCATE AND CLEARLY IDENTIFY ALL EXISTING INFRASTRUCTURE ON THE SITE AND ADJACENT TO THE SITE. UNDERGROUND LOCATES (INCLUDING BUT NOT LIMITED TO ONTARIO ONE CALL: 1–800–400–2255) SHALL BE CONDUCTED PRIOR TO THE COMMENCEMENT OF ANY EXCAVATION. CONFIRM LOCATIONS OF BURIED INFRASTRUCTURE BY CAREFULLY EXCAVATING TEST PITS AND REPORT ANY DIFFERENCES TO THE ENGINEER. ANY ISSUES ARISING FROM FAILURE OF CONTRACTOR TO DETERMINE THE SIZE, DEPTH AND LOCATION ALL EXISTING INFRASTRUCTURE WILL BE AT THE CONTRACTOR'S EXPENSE.
C. EXISTING GRADE ELEVATIONS SHOWN ON DRAWINGS ARE DERIVED FROM AVAILABLE INFORMATION AND ARE FOR GUIDANCE ONLY AND MUST BE CONFIRMED ON SITE BEFORE COMMENCING CONSTRUCTION. COMPLETENESS AND ACCURACY ARE NOT GUARANTEED. REPORT ANY DIFFERENCES TO ENGINEER.
D. COORDINATE AND SCHEDULE WORK WITH THE OWNER, AUTHORITIES AND OTHER TRADES.
E. SCHEDULE WORK TO PROVIDE THE MINIMUM DISRUPTION TO SERVICES.
F. INSTALL CONSTRUCTION FENCING AROUND THE AREA OF WORK. DO NOT REMOVE FENCING UNTIL WORK IS COMPLETE.
5.2 MAINTAIN AND PROTECT FROM DAMAGE, SERVICES, UTILITIES AND STRUCTURES ENCOUNTERED.
5.3 PROTECT EXISTING BUILDINGS, TREES AND OTHER PLANTS, LAWNS, FENCING, SERVICE POLES, WIRES, PAVEMENT, SURVEY BENCH MARKS AND MONUMENTS AND OTHER SURFACE FEATURES FROM DAMAGE WHILE WORK IS IN PROGRESS. DO NOT DISTURB SOIL WITHIN BRANCH SPREAD OF TREES OR SHRUBS THAT ARE TO REMAIN.
5.4 PROVIDE TRAFFIC CONTROL AND SAFETY MEASURES AS REQUIRED BY THE AUTHORITIES, INCLUDING ANY NECESSARY PERSONNEL AND THE SUPPLY, INSTALLATION, REMOVAL AND REPLACEMENT OF ALL NECESSARY SIGNAGE AND BARRIERS. IF APPLICABLE, PROVIDE TRAFFIC MANAGEMENT PLAN AS PER CITY OF OTTAWA REQUIREMENTS.
5.5 FENCE OFF ALL OPEN EXCAVATIONS AT THE END OF EACH WORK DAY. FENCES SHALL BE INSTALLED AND MAINTAINED A GOOD AND EFFECTIVE CONDITION.
5.6 REMOVE OBSTRUCTIONS, ICE AND SNOW, FROM SURFACES TO BE EXCAVATED.
5.7 CUT PAVEMENT AND / OR SIDEWALK NEATLY ALONG LIMITS OF PROPOSED EXCAVATION IN ORDER THAT SURFACE MAY BREAK EVENLY AND CLEANLY.
5.8 COORDINATE AND PAY FOR GEOTECHNICAL INSPECTIONS AND COMPACTION TESTS OF SUB–GRADE, PIPE BEDDING AND EACH LAYER OF SURROUND MATERIAL, BACKFILL, SUB–BASE, BASE AND ASPHALT TO THE SATISFACTION OF THE GEOTECHNICAL CONSULTANT AND ENGINEER. SUBMIT GEOTECHNICAL INSPECTIONS AND COMPACTION REPORTS TO ENGINEER FOR REVIEW. A MINIMUM ON ONE SET OF INSPECTIONS AND COMPACTION TESTS SHALL BE COMPLETED ON EACH PIPE SEGMENT GREATER THAN 20 m IN LENGTH. A MINIMUM ONE SET OF INSPECTION AND COMPACTION TESTS SHALL BE COMPLETED FOR EVERY 500 m^2 OF PAVEMENT AREA.
5.9 PRIOR TO COMMENCEMENT OF TOPSOIL STRIPPING REMOVE FROM SITE ALL EXPOSED BOULDERS, DEBRIS AND LIVE AND DEAD PLANT MATERIAL (EXCEPT TREES AND OTHER VEGETATION TO REMAIN). STRIP TOPSOIL FROM THE ENTIRE SITE. DO NOT MIX TOPSOIL WITH SUBSOIL. CUT AND FILL AS NECESSARY TO ACHIEVE THE PROPOSED GRADE ELEVATIONS. DISPOSE SURPLUS AND UNSUITABLE EXCAVATED MATERIAL OFF SITE. ANY REQUIRED FILL SHALL BE CLEAN WELL GRADED SAND TO OPSS 1004 UNLESS OTHERWISE DIRECTED BY GEOTECHNICAL ENGINEER. FILL SHALL BE COMPACTED TO NOT LESS THAN 95% OF CORRECTED MAXIMUM DRY DENSITY. FILL MATERIAL AND THE PLACEMENT AND COMPACTION OF THE FILL MATERIAL AS PER THE GEOTECHNICAL REPORT AND TO THE SATISFACTION OF THE GEOTECHNICAL CONSULTANT. PLACE MATERIAL IN UNIFORM LAYERS NOT EXCEEDING 300mm COMPACTED THICKNES