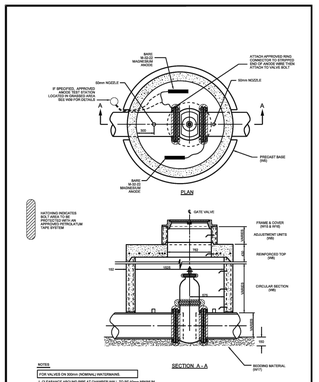

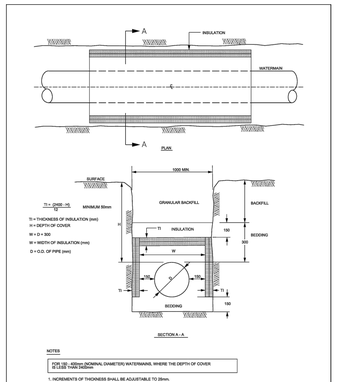

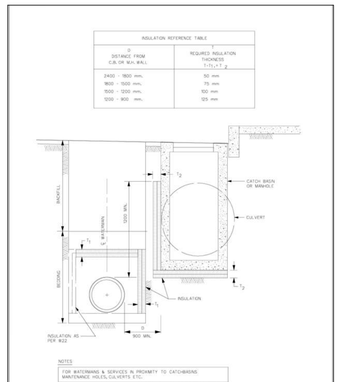

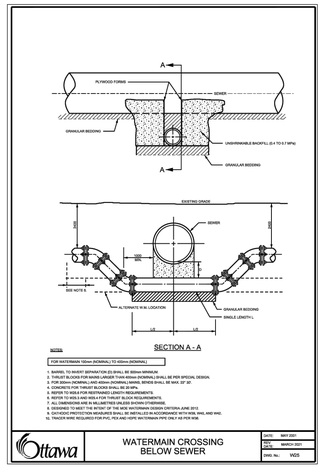

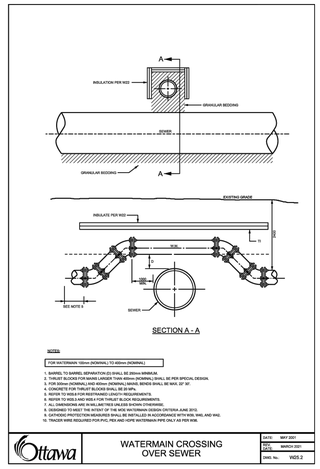

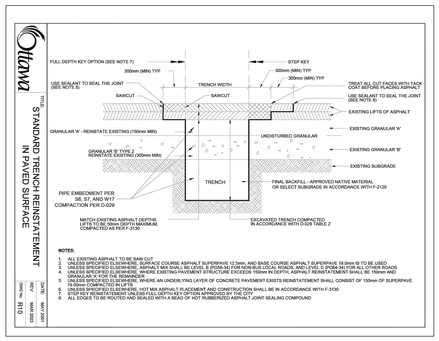

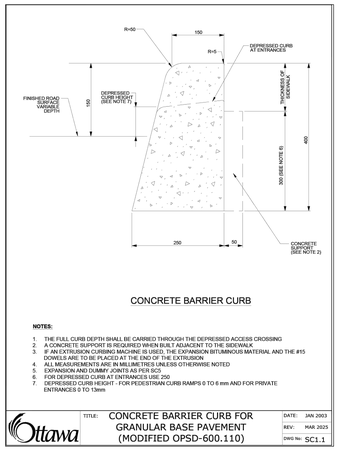

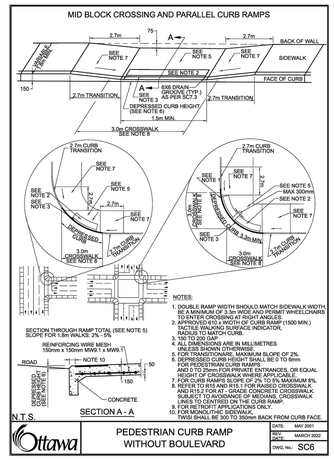

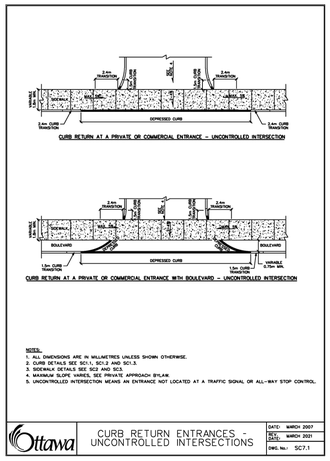

NOTE:
THE POSITION OF ALL POLE LINES, CONDUITS, WATERMAINS, SEWERS AND OTHER UNDERGROUND AND OVERGROUND UTILITIES AND STRUCTURES IS NOT NECESSARILY SHOWN ON THE CONTRACT DRAWINGS, AND WHERE SHOWN, THE ACCURACY OF THE POSITION OF SUCH UTILITIES AND STRUCTURES IS NOT GUARANTEED. BEFORE STARTING WORK, DETERMINE THE EXACT LOCATION OF ALL SUCH UTILITIES AND STRUCTURES AND ASSUME ALL LIABILITY FOR DAMAGE TO THEM.

No.	REVISION	DATE	BY
6.	REVISED PER CITY COMMENTS	NOV 18/25	ARM
5.	REVISED PER RETAINING WALL ALTERATIONS	OCT 07/25	GJM
4.	ADDITION OF GEOTECHNICAL RECOMMENDATIONS	AUG 19/25	GJM
3.	REVISED PER CITY COMMENTS	AUG 12/25	GJM
2.	REVISED PER COMPLETENESS REVIEW COMMENTS	MAY 09/25	GJM
1.	ISSUED FOR SITE PLAN APPLICATION	MARCH 21/25	GJM

SCALE: AS SHOWN

DESIGN: ARM/AM
CHECKED: ARM
DRAWN: ARM/CJF/AM
CHECKED: ARM
APPROVED: GJM

LICENSED PROFESSIONAL ENGINEER
A. R. MESTWARP
100201604
Nov 18/2025
PROVINCE OF ONTARIO

NOVATECH
Engineers, Planners & Landscape Architects
Suite 200, 240 Michael Cowpland Drive
Ottawa, Ontario, Canada K2M 1P6
Telephone (613) 254-9643
Facsimile (613) 254-5867
Website www.novatech-eng.com

LOCATION
1101 SPOOR STREET, CITY OF OTTAWA
COPPERWOOD FLATS - BLOCK 125

DRAWING NAME
NOTES AND DETAILS

PROJECT No. 122144
REV REV#6
DRAWING No. 122144-ND2

M:\2022\122144\BLOCK 30\7\CAD\Civil\122144-BLK125-ND.dwg, ND2, Nov 19, 2025 - 12:18pm, armestwarp
D07-12-25-0039
PLANA1.DWG - 841mmx594mm
19381