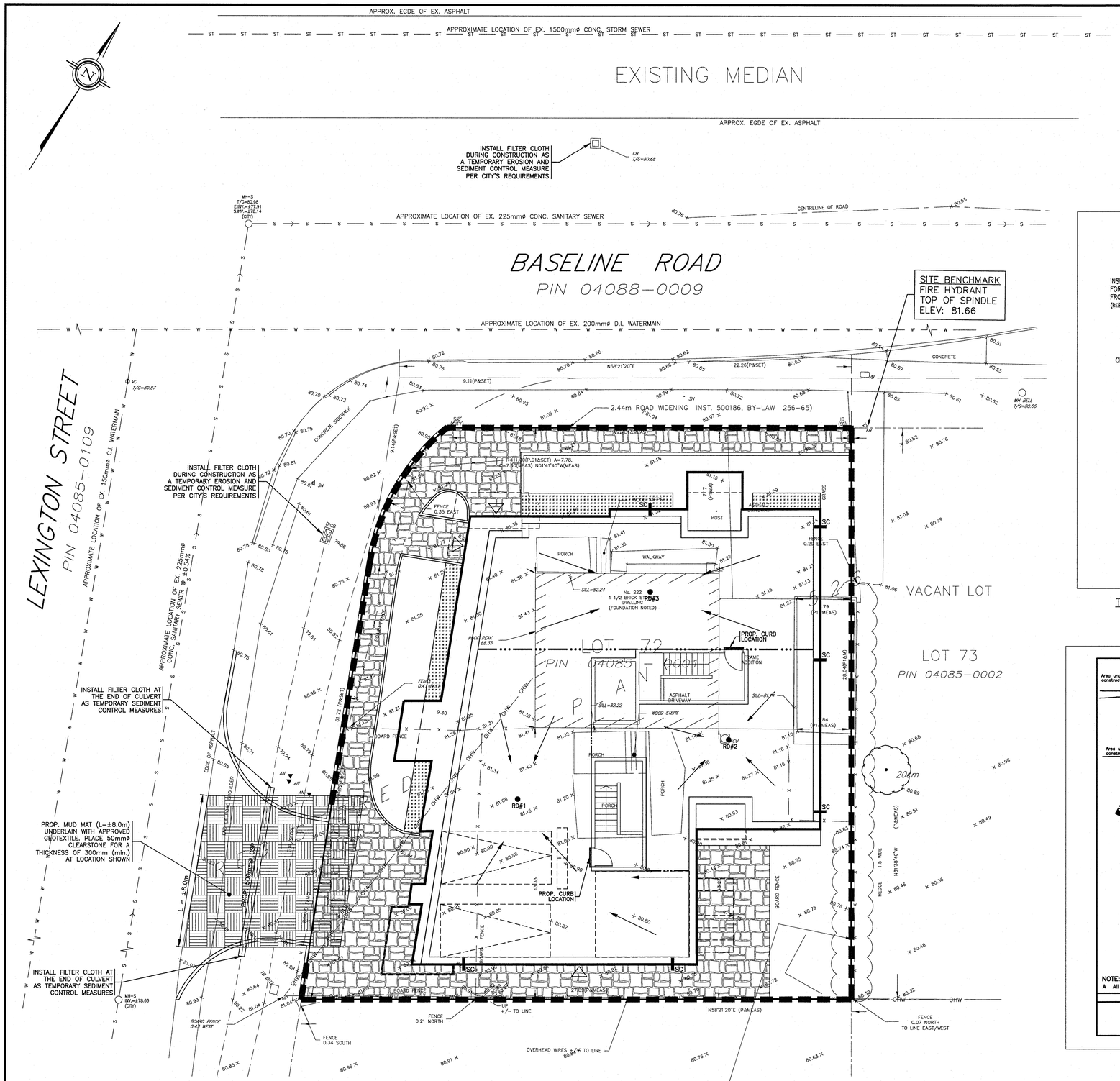

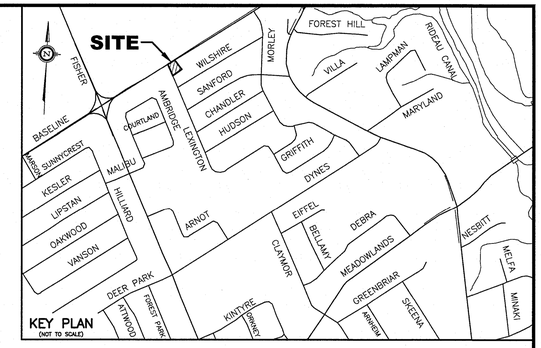

LEGEND

SILT FENCE BARRIER LOCATION

PROPOSED MUD MAT AREA

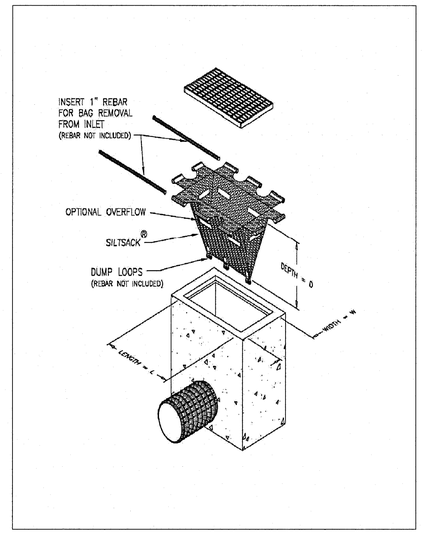

TYPICAL CATCH BASIN CONTROL DEVICE
N.T.S.

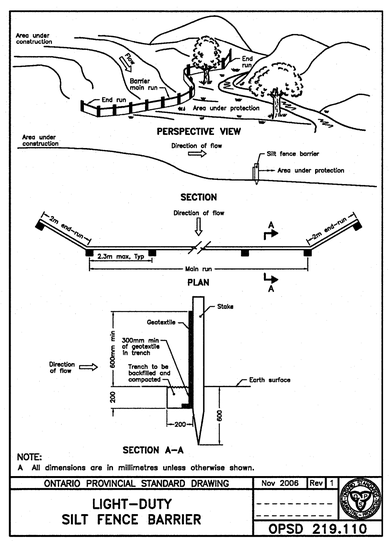

EROSION AND SEDIMENT CONTROL NOTES

BEST MANAGEMENT PRACTICES

EROSION AND SEDIMENT CONTROLS (BEST MANAGEMENT PRACTICES) SHALL BE PROVIDED DURING CONSTRUCTION OF THIS PROJECT. EROSION MUST BE MINIMIZED AND SEDIMENTS MUST BE REMOVED FROM CONSTRUCTION SITE RUNOFF IN ORDER TO PROTECT DOWNSTREAM AREAS. DURING ALL CONSTRUCTION, EROSION AND SEDIMENTATION SHOULD BE CONTROLLED BY THE FOLLOWING TECHNIQUES:

1. MINIMIZE THE EXTENT OF EXPOSED SOILS.

2. MINIMIZE THE AREA TO BE CLEARED AND GRUBBED.

3. PROTECT EXPOSED SLOPES WITH PLASTIC OR SYNTHETIC MULCHES.

4. INSTALL "SILTSACK" CATCH BASIN SEDIMENT CONTROL DEVICE OR EQUAL IN CATCH BASINS ALONG BASELINE ROAD AND LEXINGTON STREET ON-SITE AND OFF-SITE WITHIN THE ROAD RIGHT OF WAY ADJACENT TO THIS PROPERTY AS RECOMMENDED BY THE MANUFACTURER. SILTACK SHALL BE INSPECTED EVERY 2 TO 3 WEEKS AND AFTER EVERY MAJOR STORM.

5. INSTALL SILT FENCES AROUND THE PERIMETER OF STOCKPILES OF TOPSOIL TO BE USED OR REMOVED FROM SITE. (LOCATION TO BE DETERMINED).

6. SEDIMENT CONTROL DEVICES SHALL BE INSPECTED EVERY 2 TO 3 WEEKS AND AFTER MAJOR STORMS AND CLEANED OF ANY ACCUMULATED SILT AS REQUIRED. THE DEPOSITS WILL BE DISPOSED OF AS PER THE REQUIREMENTS OF THE CONTRACT.

7. IN SOME CASES SOME FILTER BARRIERS MAY BE REMOVED TEMPORARILY TO ACCOMMODATE CONSTRUCTION OPERATIONS. THE AFFECTED BARRIERS WILL BE REINSTATED AT NIGHT WHEN CONSTRUCTION IS COMPLETED. REMOVAL SHALL NOT OCCUR IF RUNOFF OR RAINFALL IS PREDICTED UNLESS A NEW DEVICE HAS BEEN INSTALLED TO PROTECT THE EXISTING STORM AND SANITARY SEWER SYSTEMS.

8. NO REFUELING OR CLEANING OF EQUIPMENT IS PERMITTED NEAR ANY EXISTING WATERWAYS.

9. DURING THE CONSTRUCTION PERIOD, THE CONTRACTOR SHALL INSPECT, MAINTAIN AND REMOVE THE CONTROL MEASURES.

10. THIS PROPOSED EROSION AND SEDIMENT CONTROL PLAN IS CONSIDERED BY (RVCA) A LIVING DOCUMENT WHICH MAY BE MODIFIED IN THE EVENT THE CONTROL MEASURES ARE INSUFFICIENT.

11. CONTRACTOR IS RESPONSIBLE TO KEEP THE ROADS FREE AND CLEAN FROM MUD AND DEBRIS DURING THE CONSTRUCTION PERIOD.

No.	REVISION	DATE	BY
2	REVISIONS AS PER PLANNER'S REVIEW COMMENTS OF SEPTEMBER 29, 2025	09/30/25	TLM
1	REVISIONS AS PER ARCHITECT'S LATEST REVISED SITE PLAN RECEIVED ON JULY 14, 2025 AND CITY'S REVIEW COMMENTS OF JUNE 10, 2025	09/26/25	TLM

LICENSED PROFESSIONAL ENGINEER
09/30/25
TONY L.M. MAK
PROVINCE OF ONTARIO
FOR SPC APPLICATION

SCALE
0 1 3 5m
1:100 HORIZONTAL
VERTICAL

DESIGN	T.L.M.
CHECKED	T.L.M.
DRAWN BY	P.M.
CHECKED	T.L.M.
APPROVED	T.L.M.

PROJECT
222 BASELINE ROAD
PART OF LOT 72
REGISTERED PLAN 526
CITY OF OTTAWA

DRAWING TITLE
PROPOSED EROSION AND SEDIMENT CONTROL PLAN

T.L. MAK ENGINEERING CONSULTANTS LTD.
CONSULTING ENGINEERS

PROJECT No.	DATE	DRAWING No.
824-74	SEPTEMBER 2024	ESC-1