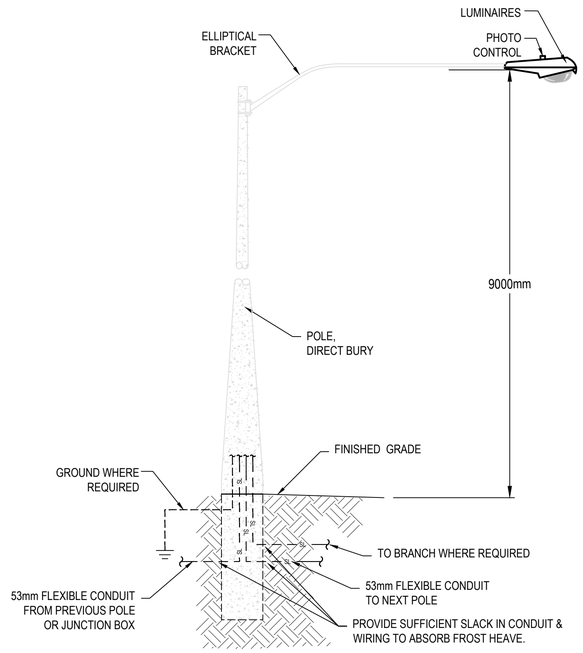

7 / C4 LIGHT STANDARD DETAIL
Scale: **Not to scale**

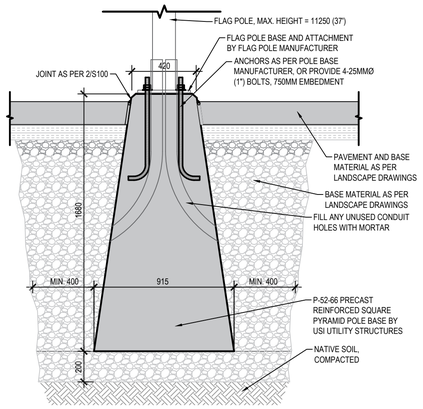

8 / C4 PRECAST FLAG POLE BASE (Typ.)
Scale: **As shown**

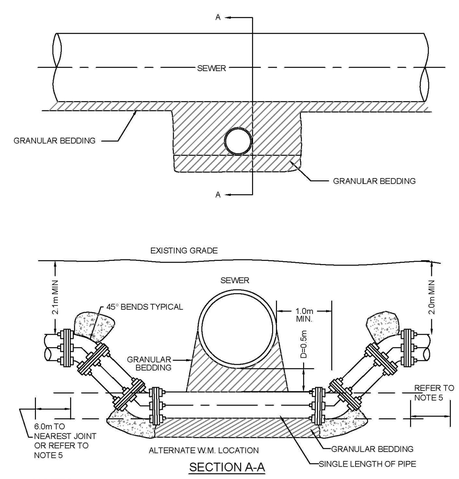

SECTION A-A

NOTES
1. BARREL TO BARREL SEPARATION SHALL BE 500mm MIN.
2. THRUST BLOCKS FOR MAINS LARGER THAN 400mm SHALL BE AS PER DESIGN.
3. FOR 300mm & 400mmØ MAINS, BENDS SHALL BE MAX. 22½°.
4. CONCRETE SHALL BE 20Mpa.
5. RETAINING RINGS AND /OR THREADED RODS TO BE USED AT ALL JOINTS WHERE CONCRETE THRUST BLOCKS CAN"T BE UTILIZED AND WHERE COUPLING CONNECTIONS ARE MADE LESS THAN 6.0m FROM THE JOINT.
6. THIS STANDARD APPLIES TO WATERMAINS 100mm TO 400mmØ (NOMINAL)

Jp2g Consultants Inc. ENGINEERS · PLANNERS · PROJECT MANAGERS

WATERMAIN CROSSING BELOW A SEWER

MAR. 2003 | MAR. 2014 | W-2A

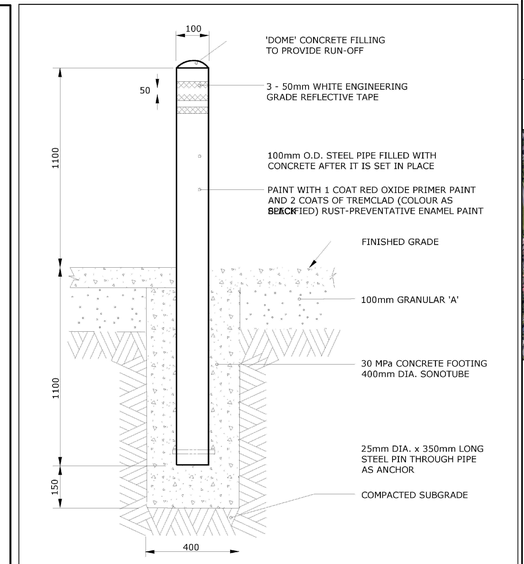

NOTES:

ALL MEASUREMENTS ARE IN MILLIMETRES UNLESS OTHERWISE NOTED

Ottawa | TITLE: 100mm DIAMETER STEEL BOLLARD INSTALLATION FOR PARKING LOTS/PARKS | DATE: MAY 2001 | REV: JAN 2015 | DWG No: F5

THE POSITION OF POLE LINES, CONDUITS, WATERMAINS, SEWERS AND OTHER UNDERGROUND AND OVERGROUND UTILITIES AND STRUCTURES IS NOT NECESSARILY SHOWN ON THE CONTRACT DRAWING, AND, WHERE SHOWN, THE ACCURACY OF THE POSITION OF SUCH UTILITIES AND STRUCTURES IS NOT GUARANTEED. BEFORE STARTING WORK, THE CONTRACTOR SHALL INFORM THEMSELVES OF THE EXACT LOCATION OF ALL SUCH UTILITIES AND STRUCTURES, AND SHALL ASSUME ALL LIABILITY FOR DAMAGE TO THEM.

DESIGN PROFESSIONAL'S SEAL OR SIGNATURE IS EFFECTIVE ONLY AS TO THAT VERSION OF THIS DOCUMENT AS ORIGINALLY PUBLISHED BY DESIGN PROFESSIONAL. DESIGN PROFESSIONAL IS NOT RESPONSIBLE FOR ANY SUBSEQUENT MODIFICATION, CORRUPTION, OR UNAUTHORIZED USE OF SUCH DOCUMENT. TO VERIFY THE VALIDITY OR APPLICABILITY OF THE SEAL OR SIGNATURE, CONTACT DESIGN PROFESSIONAL.

No.	YYYY-MM-DD	Eng./Drft.	Revision Comments
15	2025-08-08	DN / WV	ISSUED FOR PERMIT
14	2025-07-29	DN / WV	SOUMISSION POUR CONTROL DU SITE R5 / ISSUED FOR CIVIL CCN#1 REV. 1
13	2025-06-19	DN / WV	ISSUED FOR CIVIL CCN#1
12	2025-06-10	DN / WV	SOUMISSION POUR CONTROL DU SITE R4
11	2025-05-16	DN / WV	SOUMISSION POUR CONTROL DU SITE R3
10	2025-04-10	DN / LA	ISSUED FOR CONSTRUCTION - SI #001
9	2025-03-25	DN / WV	SOUMISSION POUR CONTROL DU SITE R2
8	2025-01-13	DN / ZB	ISSUED FOR TENDER
7	2024-12-20	DN / ZB	100% SOUMISSION R2
6	2022-12-09	DN / ZB	SOUMISSION POUR CONTROL DU SITE
5	2022-10-28	DN / DS	100% SOUMISSION R1
4	2022-09-30	DN / DS	100% SOUMISSION
3	2022-09-02	DN / DS	99% SOUMISSION
2	2022-06-17	DN / DS	60% SOUMISSION
1	2022-03-04	DN / RW	PRÉLIMINAIRE 30%

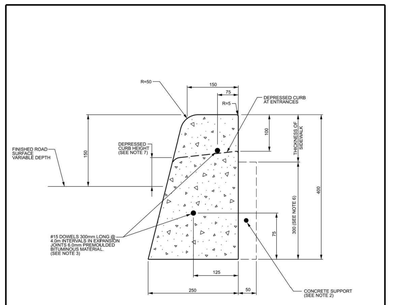

CONCRETE BARRIER CURB

NOTES:
1. THE FULL CURB DEPTH SHALL BE CARRIED THROUGH THE DEPRESSED ACCESS CROSSING.
2. A CONCRETE SUPPORT IS REQUIRED WHEN BUILT ADJACENT TO THE SIDEWALK.
3. IF AN EXTRUSION CURBING MACHINE IS USED, THE EXPANSION BITUMINOUS MATERIAL AND THE #15 DOWELS ARE TO BE PLACED AT THE END OF THE EXTRUSION.
4. ALL DIMENSIONS ARE IN MILLIMETRES UNLESS SHOWN OTHERWISE.
5. DUMMY JOINTS SHALL BE 25mm DEEP, FRONT, BACK AND TOP OF SECTION AT 4m SPACING OR MATCH JOINTING WHERE SIDEWALK IS ADJACENT.
6. FOR DEPRESSED CURB AT ENTRANCES USE 200.
7. DEPRESSED CURB HEIGHT - FOR PEDESTRIAN CURB RAMPS 0 TO 6 mm AND FOR PRIVATE ENTRANCES 0 TO 13mm.

N.T.S.

Ottawa | CONCRETE BARRIER CURB FOR GRANULAR BASE PAVEMENT (MODIFIED OPSD-600.110) | DATE: JANUARY 2003 | REV. DATE: MARCH 2021 | DWG. No.: SC1.1

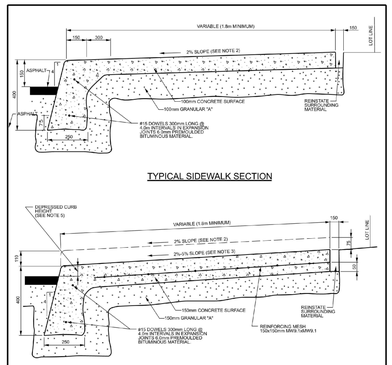

TYPICAL SIDEWALK SECTION

SECTION AT PRIVATE ENTRANCE AND PEDESTRIAN RAMPS

NOTES:
1. ALL DIMENSIONS ARE IN MILLIMETRES UNLESS SHOWN OTHERWISE.
2. THE MAXIMUM SLOPE IS NOT TO EXCEED 2%.
3. FOR CURB RAMPS, SLOPE OF 2% TO 8%, MAXIMUM 8%.
4. EXPANSION AND DUMMY JOINTS AS PER SC5.
5. DEPRESSED CURB HEIGHT - FOR PEDESTRIAN CURB RAMPS 0 TO 6 mm AND FOR PRIVATE ENTRANCES 0 TO 13 mm.

N.T.S.

Ottawa | MONOLITHIC CONCRETE CURB AND SIDEWALK | DATE: MAY 2001 | REV. DATE: MAY 2021 | DWG. No.: SC2

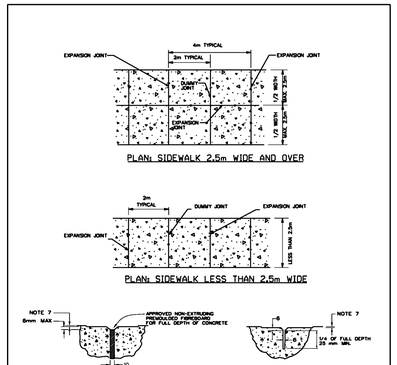

EXPANSION JOINT PROFILE

DUMMY JOINT PROFILE

NOTES:
1. EXPANSION JOINTS IN SIDEWALK SHALL BE IN LINE WITH EXPANSION JOINTS IN CURB.
2. PLACEMENT OF EXPANSION JOINTS ARE SCHEDULED AT THE DISCRETION OF THE ENGINEER AT INTERVALS OF 4m MAXIMUM, AND ALSO TO ISOLATE OBSTACLES FROM SLABS, INCLUDING POLES, BUILDINGS, ETC.
3. EDGES AND JOINTS ARE TO BE FINISHED WITH A 75mm EDGING TOOL.
4. ALL CONCRETE SIDEWALKS ARE TO HAVE A BROOM FINISH UNLESS OTHERWISE SPECIFIED.
5. ALL DIMENSIONS ARE IN MILLIMETRES UNLESS SHOWN OTHERWISE.
6. INSTALL DUMMY TRANSVERSE JOINTS AS REQUIRED SO THERE IS A MAXIMUM SPACING OF 2m BETWEEN ALL JOINTS.
7. SMOOTH ALL TOOLED EDGES TO A MAXIMUM DEPTH OF 1mm.

Ottawa | SIDEWALK CONSTRUCTION JOINTS | DATE: MAY 2001 | REV. DATE: MARCH 2016 | DWG. No.: SC5

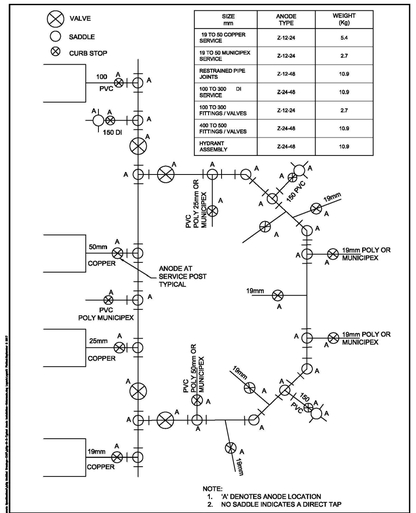

SIZE mm	ANODE TYPE	WEIGHT (Kg)
19 TO 50 COPPER SERVICE	Z-12-24	5.4
19 TO 50 MUNICIPEX SERVICE	Z-12-24	2.7
RESTRAINED PIPE JOINTS	Z-12-48	10.9
100 TO 300 DI SERVICE	Z-24-48	10.9
100 TO 300 FITTINGS / VALVES	Z-12-24	2.7
400 TO 600 FITTINGS / VALVES	Z-24-48	10.9
HYDRANT ASSEMBLY	Z-24-48	10.9

NOTE:
1. 'A' DENOTES ANODE LOCATION
2. NO SADDLE INDICATES A DIRECT TAP

Jp2g Consultants Inc. ENGINEERS · PLANNERS · PROJECT MANAGERS

TYPICAL ANODE INSTALLATION PVC WATERMAIN

MAR. 2003 | MAR.2014 | W-3

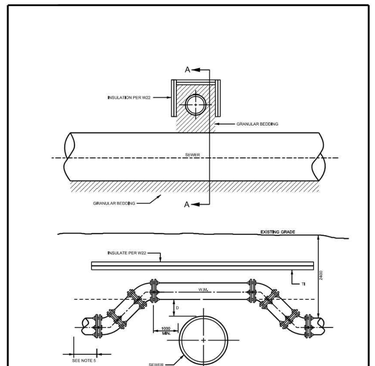

SECTION A - A

NOTES:
FOR WATERMAINS 100mm (NOMINAL) TO 400mm (NOMINAL)

1. BARREL TO BARREL SEPARATION (D) SHALL BE 250mm MINIMUM.
2. THRUST BLOCKS FOR MAINS LARGER THAN 400mm (NOMINAL) SHALL BE PER SPECIAL DESIGN.
3. FOR 300mm (NOMINAL) AND 400mm (NOMINAL) MAINS, BENDS SHALL BE MAX. 22° 30'.
4. CONCRETE FOR THRUST BLOCKS SHALL BE 20 MPa.
5. REFER TO W22A FOR RESTRAINED LENGTH REQUIREMENTS.
6. REFER TO W22A AND W22A FOR THRUST BLOCK REQUIREMENTS.
7. ALL DIMENSIONS ARE IN MILLIMETRES UNLESS SHOWN OTHERWISE.
8. DESIGNED TO MEET THE INTENT OF THE MUNICIPAL ENGINEERS ASSOCIATION CRITERIA JUNE 2012.
9. CATHODIC PROTECTION MONOFILAMENT WIRE SHALL BE INSTALLED IN ACCORDANCE WITH W18, W40, AND W42.
10. TRACER WIRE REQUIRED FOR PVC, PE4 AND HDPE WATERMAIN PIPE ONLY AS PER W35.

Ottawa | WATERMAIN CROSSING OVER SEWER | DATE: MAY 2001 | REV. DATE: MARCH 2021 | DWG. No.: W22.2

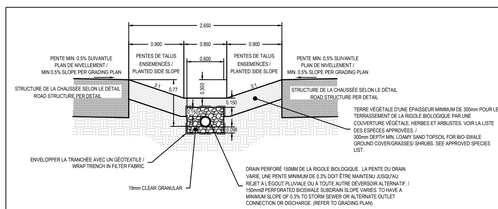

9 / C4 DÉTAIL DE RIGOLE BIOLOGIQUE NEW BIO-SWALE DETAIL
Scale: **1:50**

NOTE:
1. LA LIGNE DE CENTRE DE LA RIGOLE BIOLOGIQUE SERPENTE LÀ OU LA LARGEUR DISPONIBLE LE PERMET.
CENTER LINE OF BIO-SWALE TO MEANDER WHERE WIDTH ALLOWS.
2. TOUTES LES DIMENSIONS SONT EN MÈTRES SAUF INDICATION CONTRAIRE
ALL DIMENSIONS ARE IN METERS UNLESS OTHERWISE NOTED.

CROSSING TABLE

LOCATION	OVER / UNDER	T/G	INVERT	OBVERT	CLEARANCE (m)
1	NEW STORM - NEW WATERMAIN	86.26	84.36 (STORM)	83.86 (WM)	0.50
2	NEW SANITARY - NEW STORM SEWER	86.38	83.96 (SAN)	83.54 (STORM)	0.42
3	NEW WATERMAIN - NEW STORM SEWER	86.50	84.33 (WM)	83.83 (STORM)	0.50

JOHN SEVIGNY C.E.T.
MANAGER (A), DEVELOPMENT REVIEW EAST
PLANNING, DEVELOPMENT & BUILDING SERVICES
DEPARTMENT, CITY OF OTTAWA

APPROVED
By sevignyjo at 4:22 pm, Aug 13, 2025

REGISTERED PROFESSIONAL ENGINEER D.NGUYEN 100053149 AUGUST 08, 2025 PROVINCE OF ONTARIO

MIFO
6600 CARRIÈRE STREET, OTTAWA, ONTARIO
~
GENERAL NOTES AND DETAILS II

Jp2g Consultants Inc.
ENGINEERS · PLANNERS · PROJECT MANAGERS
12 INTERNATIONAL DRIVE, PEMBROKE, ON
Phone: (613)735-2507, Fax:(613)735-4513
1150 MORRISON DRIVE, SUITE 410, OTTAWA, ON
Phone: (613)828-7800, Fax: (613)828-2600

Designed : **WV**	Project No. : **21-5089A**
Drafted : **WV**	Revision Date : **2025-07-25**
Checked : **DN** / Approved : **DN**	Revision No. : **14**
Scale : **1:250**	**21-5089A**

C4

C1 MIFO SITE PLAN V24.DWG

D07-12-25-0040

PLAN NO. 19319