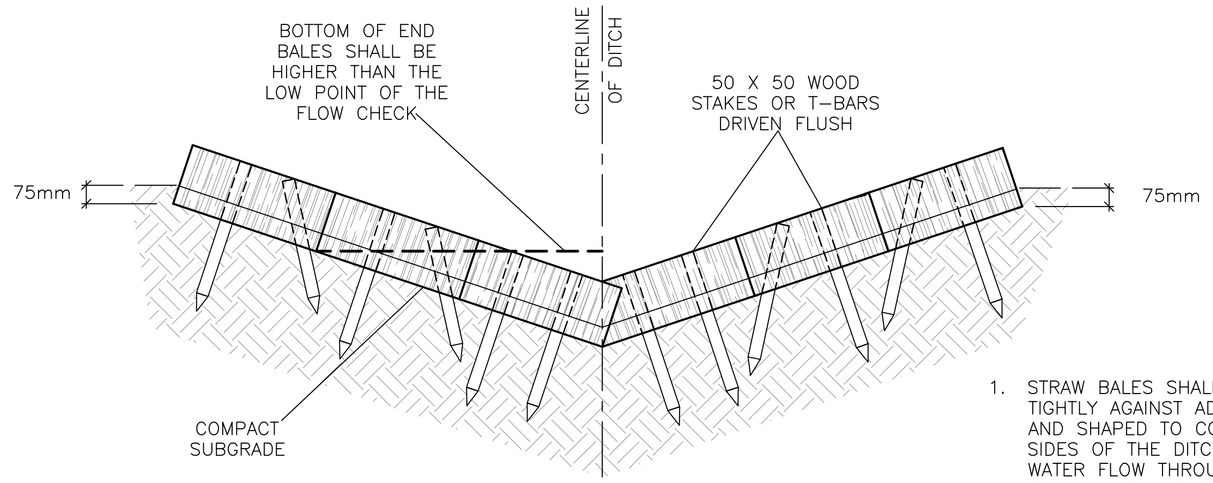

SECTION

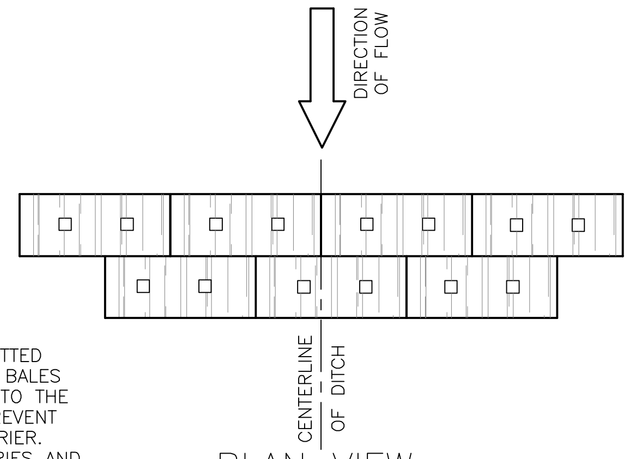

PLAN VIEW

1. STRAW BALES SHALL BE BUTTED TIGHTLY AGAINST ADJOINING BALES AND SHAPED TO CONFORM TO THE SIDES OF THE DITCH TO PREVENT WATER FLOW THROUGH BARRIER.
2. THE NUMBER OF BALES VARIES AND SHALL SUIT SHAPE OF DITCH.
3. STAKES SHALL BE EQUALLY SPACED
4. BALE TIES SHALL NOT BE IN CONTACT WITH GROUND.

STRAW BALE FLOW CHECK DAM

AS PER OPSD 219.180

N.T.S.

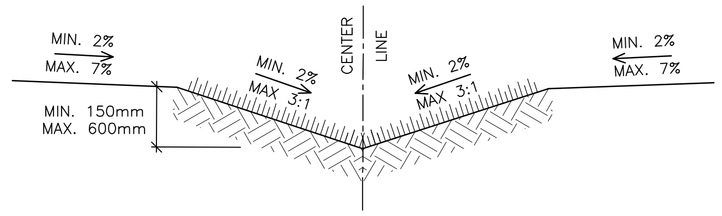

SECTION SWALE

AS PER CITY OF OTTAWA DRAWING S29

N.T.S.

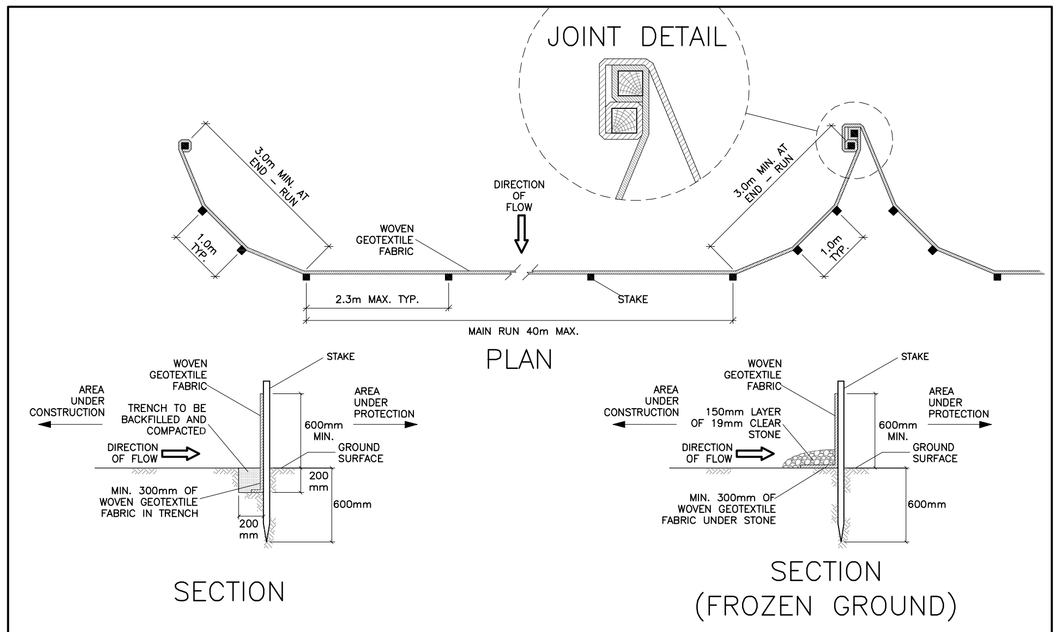

SILT FENCE BARRIER

AS PER OPSD 219.110

(MODIFIED FOR FROZEN GROUND)

N.T.S.

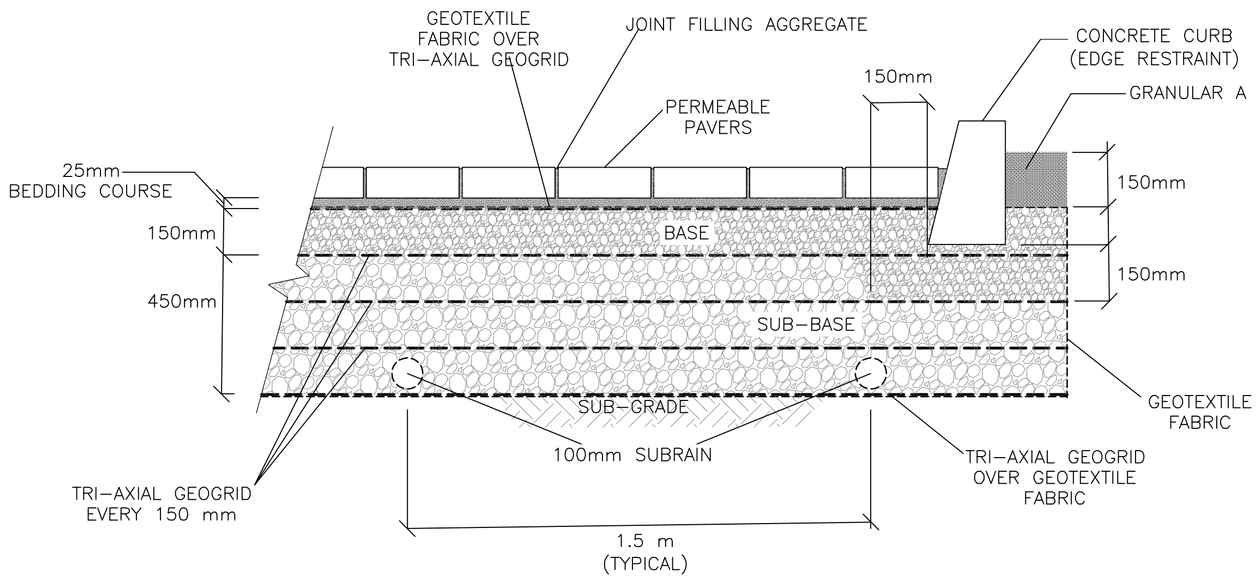

REMOVE ALL MATERIALS TO THE SUB–GRADE LEVEL. REMOVE ORGANIC OR UNSUITABLE MATERIAL FROM SUB–GRADE WHERE ENCOUNTERED. FILL OVER–EXCAVATED SUB–GRADE WITH SUB–BASE MATERIAL. SUB–GRADE TO BE FREE FROM DEBRIS, SNOW, ICE, WATER AND FROZEN GROUND. COMPACT SUB–GRADE TO 95%.

PERMEABLE PAVERS

N.T.S

PERMEABLE PAVERS:
- UNILOCK ECO–PRIORA OR APPROVED EQUAL;
- SHALL BE INTERLOCKING AND SHALL MEET THE MINIMUM MATERIAL AND PHYSICAL PROPERTIES SET FORTH IN CAN 3–A231.2, STANDARD SPECIFICATION FOR PRECAST CONCRETE PAVERS;
- MINIMUM 60 mm PAVER THICKNESS FOR PEDESTRIAN APPLICATIONS;
- MINIMUM 80 mm PAVER; AND
- JOINT WIDTHS SHALL NOT BE GREATER THAN 15 mm.

JOINT FILLING AGGREGATE & 25 mm BEDDING COURSE;
- SHALL MEET ASTM NO. 8 (5 mm DIA.) CLEAR (OPEN–GRADED) CRUSHED AGGREGATE.

GRANULAR BASE:
- CLEAR CRUSHED 20 mm DIAMETER STONE CONFORMING TO ASTM C 33 NO 57; AND
- MINIMUM 150 mm THICKNESS.

GRANULAR SUBBASE:
- CLEAR (OPEN GRADED) CRUSHED STONE 50 MM DIAMETER STONE GRADED IN ACCORDANCE WITH ASTM D 2940; OR
- OPSS GRANULAR O; AND
- MINIMUM 450 mm THICKNESS.

ALL AGGREGATES SHALL MEET THE FOLLOWING CRITERIA:
- MAXIMUM WASH LOSS OF 0.5%;
- MINIMUM DURABILITY INDEX OF 35; AND
- MAXIMUM ABRASION OF 10% FOR 100 REVOLUTIONS AND MAXIMUM OF 50% FOR 500 REVOLUTIONS.

EDGE RESTRAINT:
- A CONCRETE CURB FOR VEHICLE APPLICATIONS.

GEOTEXTILE FABRIC:
- WOVEN MONOFILAMENT OR NON–WOVEN NEEDLE PUNCHED SHALL MEET OPSS 1860 FOR CLASS II GEOTEXTILE FABRICS. SUBGRADE:
- DO NOT COMPACT.
- SCARIFY SUBGRADE IF THE UNDERLYING SOIL HAS AN INFILTRATION RATE OF LESS THAN 15 mm/hr.

PERFORATED SUBDRAIN:
- 100 mm DIAMETER, PERFORATED SUB–DRAINS; HDPE C/W FILTER FABRIC SOCK (BOSS 2000 OR APPROVED EQUAL).
- LOCATE NEAR THE BOTTOM OF THE SUB–BASE LAYER.

REINFORCING GRIDS:
- TRI–AXIAL GEOGRID, UNILOCK DRIVE GRID OR APPROVED EQUAL.
- AT SUB–GRADE LEVEL, EVERY 150 mm IN SUB–BASE, BETWEEN BASE AND SUB–BASE LAYER AND TOP OF BASE LAYER.

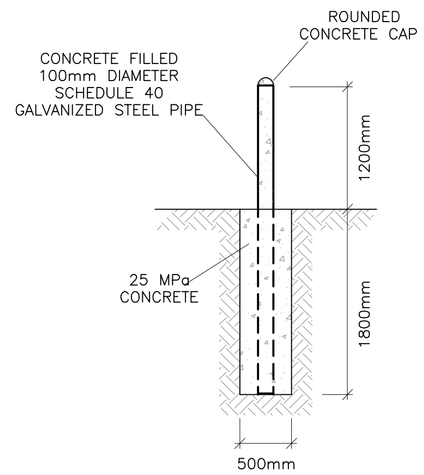

BOLLARDS

(TYPICAL)

N.T.S.

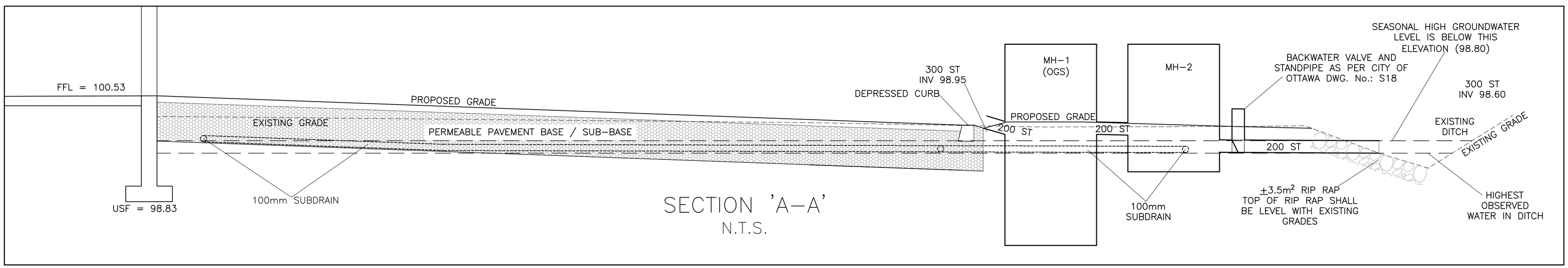

SECTION 'A–A'

N.T.S.

AHamlin

ALLISON HAMLIN
MANAGER, DEVELOPMENT REVIEW ALL WARDS
PLANNING, DEVELOPMENT & BUILDING SERVICES DEPARTMENT, CITY OF OTTAWA

KEY PLAN

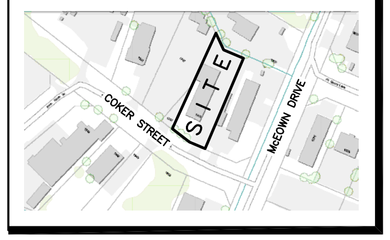

No.	DATE	REVISION
7	APR 14–25	RIP RAP ADDED AT OUTLET RE–ISSUED FOR APPROVAL
6	NOV 28–24	RE–ISSUED FOR APPROVAL
5	JUN 21–24	RE–ISSUED FOR APPROVAL
4	SEP 8–23	RE–ISSUED FOR APPROVAL
3	FEB 7–23	RE–ISSUED FOR APPROVAL
2	MAR 7–22	ISSUED FOR APPROVAL
1	FEB 15–22	ISSUED FOR COORDINATION

D. B. GRAY ENGINEERING INC.
Stormwater Management · Grading & Drainage · Storm & Sanitary Sewers · Watermains
700 Long Point Circle 613-425-8044
Ottawa, Ontario d.gray@dbgrayengineering.com

Project

PROPOSED
1–STOREY WAREHOUSE
1353 COKER STREET

OTTAWA, ONTARIO

Drawing Title

DETAILS

Engineer's Seal

LICENSED PROFESSIONAL ENGINEER
D.B. GRAY
17016502
APR 30–25
PROVINCE OF ONTARIO

NOT VALID UNLESS SIGNED & DATED

Drawn	D.B.G
H. Scale	
V. Scale	
Date	FEB 15–22
Job No.	20127

Drawing No.

C–3
of 5

Plan No. 19067 File No. D07–12–22–0038