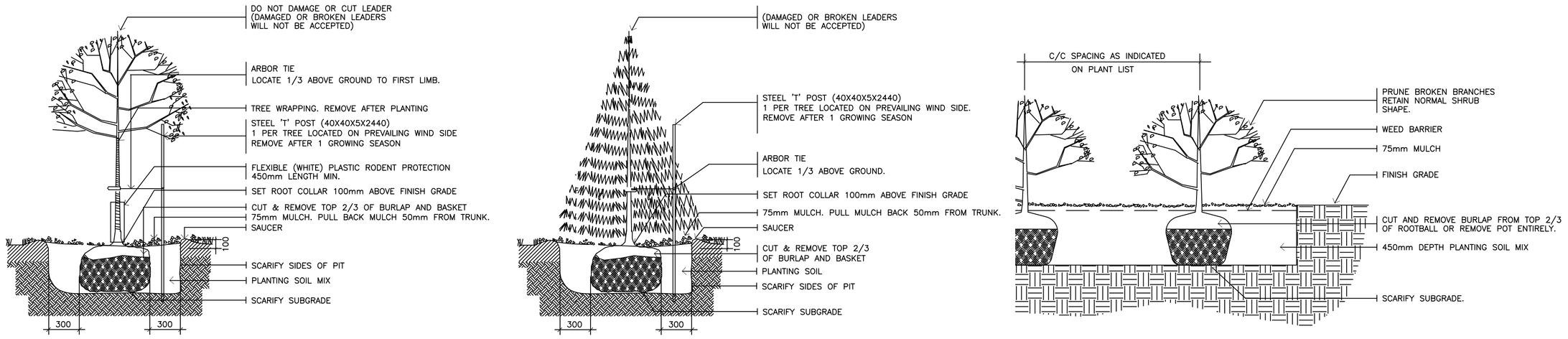

1 / L2.01 PLANTING DETAILS NTS

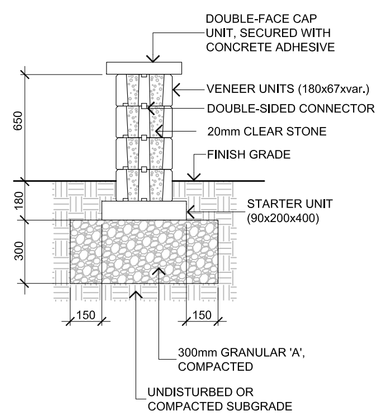

2 / L2.01 DOUBLE-SIDED TANDEM WALL SECTION NTS

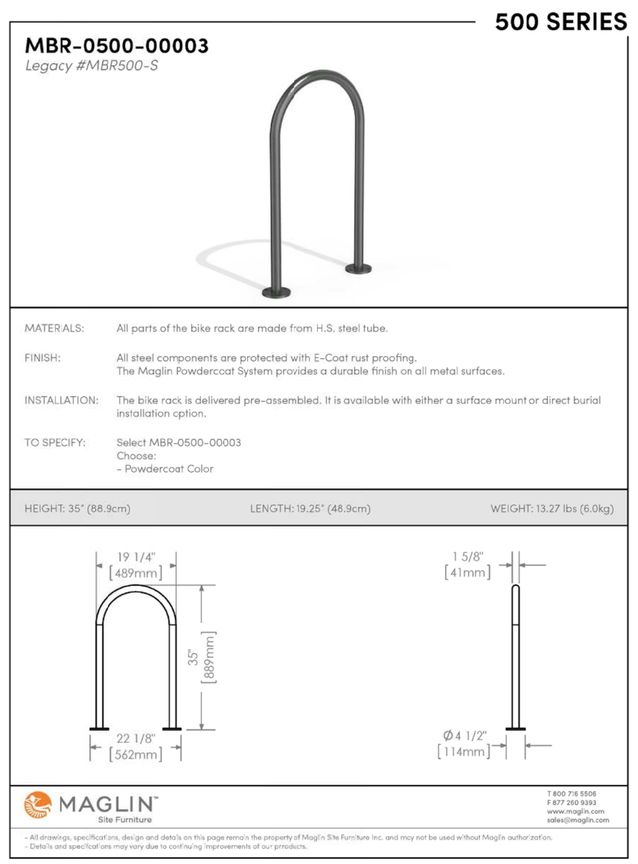

INSTALLATION: SURFACE MOUNT
FINISH: TITANIUM (GLOSS) POWDERCOAT

3 / L2.01 BICYCLE RACK NTS

LOCATION PLAN

SMARTREIT

FOR APPROVAL ONLY

no.	date	revision
4.	JULY 22/25	PER CITY COMMENTS (2)
3.	JUNE 26/25	IFT
2.	APR. 22/25	ISSUE FOR SITE PLAN APPROVAL
1.	APR. 7/25	ISSUE FOR REVIEW / COORDINATION

North Arrow

Stamp

ONTARIO ASSOCIATION OF LANDSCAPE ARCHITECTS
BUDDY A. LEVSTEK
OALA
LANDSCAPE ARCHITECT

Contractor shall check and verify all dimensions on site and report all errors and/or omissions to the Consultant.

Work to be done in accordance with all applicable codes and by-laws.

Do not scale Drawing.

This Drawing shall not be used for construction until signed by the Consultant.

Copyright reserved. This Drawing is the exclusive property of Levstek Consultants Inc. and shall not be used without consent.

Consultant

LEVSTEK CONSULTANTS
LANDSCAPE ARCHITECTS
5871 Hugh Crescent · Ottawa · Ontario · K0A 2W0
613 · 826 · 0518

Project
COMMERCIAL DEVELOPMENT
BUILDING S2
2025 MER BLEUE ROAD
OTTAWA, ONTARIO

Drawing Title
LANDSCAPE DETAILS

Drawn	Date	Drawing No.
MGB	MAR 2025	L2.01
Scale AS NOTED	Project No. 1248	

File No. D07-12-25-0059 / Plan No. 19289