1. GENERAL

1.1 USE BAR SCALE TO CONFIRM ACTUAL PLOT SCALE. EXISTING AND NEW ELEVATIONS AND INVERTS SHOWN ARE GEODETIC AND ARE IN METERS. ALL PIPE DIMENSIONS ARE NOMINAL AND IN MILLIMETERS UNLESS OTHERWISE NOTED.
1.2 UNLESS OTHERWISE STATED "ENGINEER" REFERS TO D. B. GRAY ENGINEERING INC.
1.3 SITE BOUNDARIES AND EXISTING GRADES AND OTHER FEATURES DERIVED FROM TOPOGRAPHIC SURVEY PREPARED BY FAIRHALL MOFFATT & WOODLAND LIMITED REF. No. AC27200. EXISTING AND NEW GRADE ELEVATIONS AND INVERT ELEVATIONS ON THE THE SURVEY PLAN AND THESE DRAWINGS ARE IN METRES AND ARE GEODETIC AND ARE DERIVED FROM GPS REAL-TIME NETWORK (RTN) OBSERVATIONS AND ARE REFERRED TO THE CENTRAL MERIDIAN. 76°30"W LONGITUDE MTM ZONE 9 (NAD83 ORIGINAL). ELEVATIONS ARE REFERRED TO GEODETIC DATUM (CVGD28). IT IS THE RESPONSIBILITY OF THE USER OF THE SURVEY PLAN AND THESE DRAWINGS TO VERIFY THAT THE JOB BENCHMARK HAS NOT BEEN ALTERED OR DISTURBED AND THAT ITS RELATIVE ELEVATION AND DESCRIPTION AGREE WITH THE INFORMATION SHOWN ON SURVEY PLAN AND THESE DRAWINGS.
1.4 REFER TO ARCHITECTURAL AND LANDSCAPE SITE PLANS FOR EXACT LOCATIONS OF BUILDINGS, PAVED AREAS, SIDEWALKS, PLANTERS ETC. LAYOUT SHALL BE COMPLETED BY THE CONTRACTOR AND SHALL BE REVIEWED BY THE OWNER'S REPRESENTATIVE PRIOR TO CONSTRUCTION. AT ALL TIMES THE CONTRACTOR IS RESPONSIBLE FOR THE ACCURACY OF THE LAYOUT INCLUDING LINES AND GRADES.
1.5 REFER TO TREE CONSERVATION REPORT FOR TREE PROTECTION REQUIREMENTS.
1.6 REFERENCE THE LATEST REVISION AND ALL ADDENDUMS OF THE GEOTECHNICAL INVESTIGATION BY GEMTEC CONSULTING ENGINEERS AND SCIENTISTS LIMITED PROJECT 101817.001, DATED AUGUST 30, 2022. CONSTRUCTION SHALL CONFORM TO THE GEOTECHNICAL INVESTIGATION TO THE SATISFACTION OF THE GEOTECHNICAL ENGINEER INCLUDING: SUB-GRADE PREPARATION AND CONSTRUCTION OF THE PAVEMENT STRUCTURE; EXCAVATION AND BACKFILLING; SERVICE TRENCH EXCAVATION AND PIPE BEDDING AND BACKFILL; AND THE COMPACTION OF MATERIALS.
1.7 DRAWINGS ARE TO BE READ IN CONJUNCTION WITH SERVICING STUDY & STORM WATER MANAGEMENT REPORT No. 23123 PREPARED BY D. B. GRAY ENGINEERING INC.
1.8 CONSTRUCTION SHALL BE PERFORMED IN ACCORDANCE WITH THE OCCUPATIONAL HEALTH AND SAFETY ACT AND CURRENT CITY OF OTTAWA STANDARD SPECIFICATIONS AND DRAWINGS.
1.9 ONTARIO PROVINCIAL STANDARD SPECIFICATIONS AND DRAWINGS SHALL APPLY WHERE NO CITY OF OTTAWA STANDARD SPECIFICATIONS OR DRAWINGS ARE AVAILABLE.
1.10 REINSTATE AREAS DISTURBED BY CONSTRUCTION TO PRE-CONSTRUCTION CONDITIONS.
1.11 REINSTATE CITY PROPERTIES TO CITY STANDARDS AND TO CITY OF OTTAWA'S SATISFACTION.

2. EROSION AND SEDIMENT CONTROL PLAN

2.1 THE CONTRACTOR SHALL IMPLEMENT BEST MANAGEMENT PRACTICES TO PROVIDE PROTECTION OF THE AREA DRAINAGE SYSTEM AND THE RECEIVING WATER COURSE DURING CONSTRUCTION ACTIVITIES. THIS INCLUDES LIMITING THE AMOUNT OF EXPOSED SOIL, USING SEDIMENT CAPTURE FILTER SOCK INSERTS IN CATCH BASINS AND MANHOLES AND INSTALLING SILT FENCES AND OTHER EFFECTIVE SEDIMENT TRAPS. THE CONTRACTOR ACKNOWLEDGES THAT FAILURE TO IMPLEMENT APPROPRIATE EROSION AND SEDIMENT CONTROL MEASURES MAY BE SUBJECT TO PENALTIES IMPOSED BY ANY APPLICABLE REGULATORY AGENCY. SPECIFICALLY THE CONTRACTOR SHALL INSTALL THE FOLLOWING CONTROL MEASURES AND INSPECT (AFTER EACH RAINFALL) AND MAINTAIN THE CONTROL MEASURES. DO NOT REMOVE UNTIL CONSTRUCTION IS COMPLETE.
2.2 INSTALL A SILT FENCE BARRIER AROUND STOCKPILED SEDIMENT OR SOIL. PRIOR TO COMMENCEMENT OF CONSTRUCTION INSTALL A SILT FENCE BARRIER AS SHOWN ON PLANS. INSPECT ALL SILT FENCES AT THE END OF EACH DAY AND AFTER EACH RAINFALL. REMOVE SEDIMENT DEPOSITS WHEN THE LEVEL OF DEPOSITS REACHES ONE THIRD THE HEIGHT OF THE FENCE. IMMEDIATELY REPAIR OR REPLACE ANY DAMAGED SECTIONS OF FENCE. DO NOT REMOVE ANY SILT FENCES IN ANY PHASE UNTIL CONSTRUCTION IS COMPLETE.
2.3 PRIOR TO COMMENCEMENT OF CONSTRUCTION INSTALL STRAW BALE FLOW CHECK DAMS AS INDICATED ON DRAWINGS. INSPECT ALL STRAW BALE FLOW CHECK DAMS AT THE END OF EACH DAY AND AFTER EVERY RAINFALL. REMOVE SEDIMENT DEPOSITS WHEN THE LEVEL OF DEPOSITS REACHES ONE THIRD THE HEIGHT OF THE DAM. IMMEDIATELY REPAIR OR REPLACE ANY DAMAGED BALES. STRAW BALES SHALL BE EMBEDDED INTO SOIL A MINIMUM 150MM AND SHALL BE SECURELY ANCHORED BY TWO STAKES. THE FIRST STAKE IN EACH BALE SHALL BE DRIVEN TOWARDS THE PREVIOUSLY LAID BALE TO FORCE THE BALES TOGETHER. DO NOT REMOVE ANY STRAW BALES UNTIL CONSTRUCTION IS COMPLETE.
2.4 CONTROL AND LIMIT VEHICLE ACCESS TO AND AROUND THE CONSTRUCTION SITE TO MINIMIZE THE DISTURBANCE OF SOIL AND VEGETATION.
2.5 ANY MATERIAL DEPOSITED ON A PUBLIC ROAD SHALL BE REMOVED BY SWEEPING AND SHOVELING OR VACUUMING AND DISPOSING SEDIMENT IN A CONTROLLED AREA. DO NOT SWEEP OR HOSE MATERIAL INTO ANY STORMWATER CONVEYANCE SYSTEM.
2.6 CONSTRUCTION IS CONSIDERED COMPLETE WHEN THE FOLLOWING CONDITIONS HAVE BEEN MET:
A. ALL STRUCTURES HAVE BEEN BUILT.
B. ALL HARD SURFACES HAVE BEEN CONSTRUCTED.
C. ALL PROPOSED GRASSED AREAS ARE EITHER SODDED OR HAVE A FULL COVERAGE OF WELL ESTABLISHED TURF AND HAVE HAD A MINIMUM OF ONE FULL GROWING SEASON (MAY 15TH TO SEPTEMBER 15TH).
D. THERE ARE NO AREAS OF EXPOSED EARTH.
E. ALL STOCKPILED MATERIALS HAVE BEEN REMOVED.
2.7 REMOVE EROSION AND SEDIMENT CONTROL MEASURES WHEN CONSTRUCTION IS COMPLETE.

3. GRADING & DRAINAGE

3.1 NEW GRADES TO MATCH EXISTING AT PROPERTY LINE. NO EXCESS DRAINAGE WILL BE DIRECTED TOWARDS THE ADJACENT PROPERTIES DURING OR AFTER CONSTRUCTION. THERE WILL BE NO ALTERATION TO EXISTING GRADE AND DRAINAGE PATTERNS ON PROPERTY LINE.
3.2 ALL AREAS SHALL BE GRADED TO ENSURE ADEQUATE DRAINAGE AWAY FROM BUILDINGS TO CATCH BASINS, SWALES, DITCHES AND OTHER APPROVED DISPOSAL AREAS. GRADING SHALL BE GRADUAL BETWEEN FINISHED SPOT ELEVATIONS SHOWN ON DRAWINGS TO PREVENT PONDING (OTHER THAN PONDING REQUIRED FOR STORMWATER MANAGEMENT).
3.3 WHETHER RESULT OF POOR WORKMANSHIP OR DAMAGE: DEFECTIVE GRADING SHALL BE CORRECTED.
3.4 CULVERTS SHALL [[HDPE (TO 900mm)]] BE HDPE TO CITY OF OTTAWA STANDARDS AND SPECIFICATIONS AND TO OPSS 1840 AND CSA B182.8 OR 182.6. MINIMUM 320 kPa STIFFNESS AT 5% DEFLECTION. JOINTS SHALL BE SOIL-TIGHT OR BETTER. [[CULVERTS SHALL BE BOSS 2000 OR APPROVED EQUAL]] CULVERTS SHALL BE 500mm ROUND CORRUGATED STEEL [[UNDER 600mm 2.0 mm]] [[600mm AND OVER 2.8mm]] THICK ALUMINIZED TYPE 2 TO CITY OF OTTAWA STANDARDS AND SPECIFICATIONS AND TO OPSS 1801 AND OPSD 805.010 AND CSA G401. ALL CULVERTS WITHIN PAVED AREAS SHALL HAVE 5:1 FROST TAPERS FROM THE INVERT OF THE CULVERT TO THE PAVEMENT SUB-GRADE. PROVIDE A INLET TYPE GRATE (VERTICAL BARS) AT THE INLET AND AN OUTLET TYPE GRATE(HORIZONATAL BARS) AT THE OUTLET OF ALL CULVERTS.
3.7 RIP RAP: PLACE RIP-RAP 300mm THICK AS INDICATED ON PLANS AS PER OPSS 511 AND OPSD 810.010 AND/OR 810.020. USE QUARRIED STONE 200MM TO 300MM IN DIAMETER. AREA TO BE RIP RAPPED SHALL BE EXCAVATED AND FINE GRADED TO A UNIFORM AND EVEN SURFACE TO PROVIDE ADEQUATE FOUNDATION. FILL AND THOROUGHLY COMPACT DEPRESSIONS. WHERE RIP RAP IS TO BE PLACED ON SLOPES, EXCAVATE TRENCH AT TOE OF SLOPE. PLACE GEOTEXTILE FABRIC ON PREPARED SURFACE. GEOTEXTILE FABRIC SHALL EXTEND A MINIMUM 300mm BEYOND THE EXTENT OF THE RIP RAP IN ALL DIRECTIONS. PLACE RIP RAP ON FABRIC CAREFULLY, TO AVOID PUNCTURING FABRIC. PLACE RIP RAP IN A SET AND STABLE MANNER. ROCK SHALL BE PLACED, STARTING AT THE LOWER END OF THE SLOPE. THE LARGEST ROCKS OBTAINABLE SHALL BE USED AND PLACED IN THE BOTTOM COURSES AND FOR USE AS HEADERS THROUGH SUBSEQUENT COURSES. THEY SHALL BE LAID CLOSELY AND SUCH THAT THEY WILL PROVIDE A REASONABLE SEMBLANCE OF COURSES. FILL VOIDS WITH ROCK SPALLS OR COBBLES. FINNISH SURFACE EVEN, FREE OF LARGE OPENINGS AND NEAT IN APPEARANCE.
3.5 GEOTEXTILE FABRIC: TO OPSS 1860. WOVEN SYNTHETIC FIBRE FABRIC SHALL BE USED IN SILT FENCE BARRIER (GEOSYNTHETIC HD105 OR APPROVED EQUAL). NON-WOVEN SYNTHETIC FIBRE FABRIC 1.75mm THICK, 200g/sq.m. SHALL BE USED FOR MATERIAL SEPARATION. SUBDRAIN / DRY WELL / INFILTRATION TRENCH APPLICATIONS: GEOSYNTHETIC TERRAFIX 360R OR APPROVED EQUAL. RIP RAP APPLICATIONS: GEOSYNTHETIC TERRAFIX 420R OR APPROVED EQUAL. BIAXIAL GEOGRID FABRIC: GEOSYNTHETIC TERRAFIX TBX2500 OR APPROVED EQUAL. PRIOR TO INSTALLATION SUBMIT SHOP DRAWING TO ENGINEER FOR APPROVAL. GEOTEXTILE FABRIC SHALL BE FREE OF TEARS AND RESISTANT TO DETERIORATION BY ULTRA VIOLET AND HEAT EXPOSURE. PLACE GEOTEXTILE MATERIAL BY UNROLLING ONTO GRADED SURFACE, SMOOTH AND FREE OF TENSION STRESS, FOLDS, WRINKLES AND CREASES. PLACE GEOTEXTILE MATERIAL ON SLOPING SURFACES IN ONE CONTINUOUS LENGTH FROM TOE OF SLOPE TO UPPER EXTENT OF GEOTEXTILE. OVERLAP EACH SUCCESSIVE STRIP OF GEOTEXTILE 600mm OVER PREVIOUSLY LAID STRIP IN DIRECTION OF FLOW. ALTERNATIVELY THE FABRIC MAY BE LAPPED A MINIMUM OF 300mm AND PINNED TOGETHER. PROTECT INSTALLED GEOTEXTILE MATERIAL FROM DISPLACEMENT, DAMAGE OR DETERIORATION BEFORE, DURING AND AFTER PLACEMENT OF MATERIAL LAYERS AFTER INSTALLATION, COVER WITH OVERLYING LAYER WITHIN 4 HOURS OF PLACEMENT. DURING DELIVERY AND STORAGE, PROTECT GEOTEXTILES FROM DIRECT SUNLIGHT, ULTRAVIOLET RAYS, EXCESSIVE HEAT, MUD, DIRT, DUST, DEBRIS AND RODENTS. VEHICULAR TRAFFIC NOT PERMITTED DIRECTLY ON GEOTEXTILE. AVOID PUNCTURING GEOTEXTILE. REPLACE DAMAGED OR DETERIORATED GEOTEXTILE.

4. SITE SERVICES

4.1 SEWER MATERIAL SHALL BE PVC SDR-28 FOR AND SHALL CONFORM TO CSA B182.2 AND SHALL HAVE BELL AND SPIGOT JOINTS WITH RUBBER GASKETS. PROVIDE A MINIMUM 1.8 m COVER OVER SEWERS. WHERE THE MINIMUM COVER IS NOT POSSIBLE INSULATE AS INDICATED AND AS PER DETAIL. INSULATE FORCEMAIN AS INDICATED AND AS PER DETAIL.
4.2 PROVIDE A MINIMUM 2.4 m COVER OVER WELL WATER PIPE. WHERE THE MINIMUM COVER IS NOT POSSIBLE INSULATE AS PER CITY OF OTTAWA DWG. NO. W22.
4.3 THE INLET CONTROL DEVICES (ICDs), LOCATED IN THE INLET OF THE CULVERT AT EACH STORMWATER DETENTION AREA, SHALL BE PLUG STYLE WITH A ROUND ORIFICE (WITH THE ORIFICE LOCATED AT THE BOTTOM OF THE PLUG) MANUFACTURED BY PEDRO PLASTICS (OR APPROVED EQUAL) AND SIZED BY THE MANUFACTURER FOR A DISCHARGE RATE AS INDICATED ON THE PLANS. PRIOR TO INSTALLATION SUBMIT SHOP DRAWING TO ENGINEER FOR APPROVAL.
4.4 WATER FILL STATION / WATER SUPPLY FOR FIRE FIGHTING STORAGE TANKS, CHUTE WITH FIRE FITTINGS AND DRAW PIPES AS PER LOCAL FIRE DEPARTMENT STANDARDS. SUPPLY AND INSTALL A LOW WATER LEVEL FLOAT ALARM (AUDIBLE AND VISUAL) THAT IS ACTIVATED WHEN THE WATER LEVEL DROPS MORE THAN 300 mm BELOW THE TOP OF THE TANK. CONNECT 45,460 LITRE (10,000 GAL) CONCRETE TANKS WITH 250 mm DIAMETER PVC DR25 PIPE (IPEX BLUE BRUTE OR APPROVED EQUAL). CORE DRILL OPENINGS IN TANKS AND MAKE JOINTS WATERTIGHT BETWEEN TANK AND PIPE. AS INDICATED ON PLANS: TANKS SHALL EITHER HAVE A CHUTE AND A DRAW PIPE OR SHALL HAVE AN ACCESS OPENING WITH A 150 mm GALVANIZED STEEL "CANDY CANE" VENT C/W WITH RODENT SCREEN. ANCHOR TANKS TO PREVENT UPLIFT FROM HYDROSTATIC PRESSURES USING A METHOD APPROVED BY TANK MANUFACTURER. HANDLE AND INSTALL FIRE STORAGE TANKS USING METHODS APPROVED BY THE TANK MANUFACTURER AND AS FOLLOWS (IN THE EVENT OF A CONFLICT, THE METHOD APPROVED BY THE MANUFACTURER SHALL BE USED):
A. PLACE TANK PLUMB AND TRUE TO ALIGNMENT AND GRADE.
B. SET TANK ON MINIMUM 300 mm OF OPSS GRANULAR A COMPACTED TO 100% CORRECTED MAXIMUM DRY DENSITY OR AS DIRECTED BY MANUFACTURER. RE-CYLCLED GRANULAR MATERIALS ARE NOT PERMITTED.
C. PLACE GRANULAR BACKFILL MATERIALS IN A UNIFORM LAYERS TO COMPACTED THICKNESS OF 150 mm, COMPACT TO 95% CORRECTED MAXIMUM DRY DENSITY.
D. PLACE LAYERS SIMULTANEOUSLY ON BOTH SIDES OF INSTALLED WORK TO EQUALIZE LOADING.
D. MAKE ALL JOINTS WATERTIGHT.
E. PERFORM FIELD LEAKAGE TESTS ON ALL TANKS AND CONNECTING PIPES AND WATERMAIN COMPLETED IN ACCORDANCE WITH OPSS 407 (MAINTENANCE HOLES & VALVE CHAMBERS) & OPSS 410 (SEWERS). REPAIR AND RETEST AS REQUIRED. REPAIR VISIBLE LEAKS REGARDLESS OF TEST RESULTS.

4.5 CLASS 4 SEWAGE SYSTEM:
THE PROPOSED CLASS 4 SEWAGE SYSTEM SHALL CONSIST OF A 21,375 L (MINIMUM) SEPTIC TANK; THREE ECOFLO BIOFILTERS (ECOFLO STB-840B UNIT); AND TYPE "A" DISPERSAL BED AND SHALL CONFORM TO THE REQUIREMENTS OF THE ONTARIO BUILDING CODE (OBC). THE SEWAGE SYSTEM SHALL BE CONSTRUCTED BY A REGISTERED SEWAGE SYSTEM INSTALLER. THE ECOFLO BIOFILTER SYSTEM SHALL BE INSTALLED, MAINTAINED AND SERVICED BY MANUFACTURER TRAINED AND AUTHORIZED AGENTS OR EMPLOYEES. THE SEPTIC TANK SHALL CONFORM TO THE REQUIREMENTS OF CSA B66 AND THE OBC AND SHALL BE FITTED WITH AN EFFLUENT FILTER THAT SCREENS OUT PARTICLES LARGER THAN 3.2 mm AND AS RECOMMENDED BY THE MANUFACTURER. HANDLE AND INSTALL SEPTIC TANK USING METHODS APPROVED BY THE TANK MANUFACTURER AND AS FOLLOWS (IN THE EVENT OF A CONFLICT, THE METHOD APPROVED BY THE MANUFACTURER SHALL BE USED):
A. PLACE TANK PLUMB AND TRUE TO ALIGNMENT AND GRADE.
B. TOP OF TANK SHALL BE A MINIMUM 600 mm AND A MAXIMUM 1200 mm BELOW FINISHED GRADE OR AS PER MANUFACTURER'S RECOMMENDATIONS. INSTALL MANUFACTURER SUPPLIED PRECAST CONCRETE ACCESS RISERS TO EXTEND ACCESS AS PER MANUFACTURER'S RECOMMENDATIONS.
C. SET TANK ON MINIMUM 150 mm OF GRANULAR A COMPACTED TO 100% CORRECTED MAXIMUM DRY DENSITY OR AS DIRECTED BY MANUFACTURER.
D. PLACE GRANULAR BACKFILL MATERIALS IN A UNIFORM LAYERS TO COMPACTED THICKNESS OF 150 mm, COMPACT TO 95% CORRECTED MAXIMUM DRY DENSITY. BUILD A 3H:1V FROST TAPER WITHIN THE UPPER 1.2 m.
E. PLACE LAYERS SIMULTANEOUSLY ON BOTH SIDES OF INSTALLED WORK TO EQUALIZE LOADING.
F. ANCHOR TANK TO PREVENT UPLIFT FROM HYDROSTATIC PRESSURES USING A METHOD APPROVED BY TANK MANUFACTURER.
G. MAKE JOINTS WATERTIGHT BETWEEN TANK AND PIPE.

5. CONSTRUCTION:

5.1 PRIOR TO COMMENCING WORK:
A. OBTAIN AND PAY FOR ALL NECESSARY PERMITS AND APPROVALS FROM THE AUTHORITIES.
B. SIZE, DEPTH AND LOCATION OF EXISTING INFRASTRUCTURE (SERVICES, UTILITIES, AND STRUCTURES) AND ARE NOT NECESSARILY SHOWN ON DRAWINGS AND THOSE INDICATED ON THE DRAWINGS ARE DERIVED FROM AVAILABLE INFORMATION AND ARE FOR GUIDANCE ONLY AND MUST BE CONFIRMED ON SITE BEFORE COMMENCING ANY WORK. COMPLETENESS AND ACCURACY ARE NOT GUARANTEED. NOTIFY ALL APPLICABLE OWNERS, UTILITY COMPANIES AND AUTHORITIES HAVING JURISDICTION OF PROPOSED WORK AND LOCATE AND CLEARLY IDENTIFY ALL EXISTING INFRASTRUCTURE ON THE SITE AND ADJACENT TO THE SITE. UNDERGROUND LOCATES (INCLUDING BUT NOT LIMITED TO ONTARIO ONE CALL: 1-800-400-2255) SHALL BE CONDUCTED PRIOR TO THE COMMENCEMENT OF ANY EXCAVATION. CONFIRM LOCATIONS OF BURIED INFRASTRUCTURE BY CAREFUL TEST EXCAVATIONS AND REPORT ANY DIFFERENCES TO THE ENGINEER. ANY ISSUES ARISING FROM FAILURE OF CONTRACTOR TO DETERMINE THE SIZE, DEPTH AND LOCATION ALL EXISTING INFRASTRUCTURE WILL BE AT THE CONTRACTOR'S EXPENSE.
C. EXISTING GRADE ELEVATIONS SHOWN ON DRAWINGS ARE DERIVED FROM AVAILABLE INFORMATION AND ARE FOR GUIDANCE ONLY AND MUST BE CONFIRMED ON SITE BEFORE COMMENCING CONSTRUCTION. COMPLETENESS AND ACCURACY ARE NOT GUARANTEED. REPORT ANY DIFFERENCES TO ENGINEER.
D. COORDINATE AND SCHEDULE WORK WITH THE OWNER, AUTHORITIES AND OTHER TRADES.
E. SCHEDULE WORK TO PROVIDE THE MINIMUM DISRUPTION TO SERVICES.
F. INSTALL CONSTRUCTION FENCING AROUND THE AREA OF WORK. DO NOT REMOVE FENCING UNTIL WORK IS COMPLETE.
5.2 MAINTAIN AND PROTECT FROM DAMAGE, SERVICES, UTILITIES AND STRUCTURES ENCOUNTERED.
5.3 PROTECT EXISTING BUILDINGS, TREES AND OTHER PLANTS, LAWNS, FENCING, SERVICE POLES, WIRES, PAVEMENT, SURVEY BENCH MARKS AND MONUMENTS AND OTHER SURFACE FEATURES FROM DAMAGE WHILE WORK IS IN PROGRESS. DO NOT DISTURB SOIL WITHIN BRANCH SPREAD OF TREES OR SHRUBS THAT ARE TO REMAIN.
5.4 PROVIDE TRAFFIC CONTROL AND SAFETY MEASURES AS REQUIRED BY THE AUTHORITIES, INCLUDING ANY NECESSARY PERSONNEL AND THE SUPPLY, INSTALLATION, REMOVAL AND REPLACEMENT OF ALL NECESSARY SIGNAGE AND BARRIERS. IF APPLICABLE, PROVIDE TRAFFIC MANAGEMENT PLAN AS PER CITY OF OTTAWA REQUIREMENTS.
5.5 FENCE OFF ALL OPEN EXCAVATIONS AT THE END OF EACH WORK DAY. FENCES SHALL BE INSTALLED AND MAINTAINED A GOOD AND EFFECTIVE CONDITION.
5.6 REMOVE OBSTRUCTIONS, ICE AND SNOW, FROM SURFACES TO BE EXCAVATED.
5.7 CUT PAVEMENT AND / OR SIDEWALK NEATLY ALONG LIMITS OF PROPOSED EXCAVATION IN ORDER THAT SURFACE MAY BREAK EVENLY AND CLEANLY.
5.8 COORDINATE AND PAY FOR GEOTECHNICAL INSPECTIONS AND COMPACTION TESTS OF SUB-GRADE, PIPE BEDDING AND EACH LAYER OF SURROUND MATERIAL, BACKFILL AND GRANULAR MATERIAL HALT TO THE SATISFACTION OF THE GEOTECHNICAL CONSULTANT AND ENGINEER. SUBMIT GEOTECHNICAL INSPECTIONS AND COMPACTION REPORTS TO ENGINEER FOR REVIEW.
5.9 CUT AND FILL AS NECESSARY TO ACHIEVE THE PROPOSED GRADE ELEVATIONS. DISPOSE OF SURPLUS AND UNSUITABLE EXCAVATED MATERIAL OFF SITE. ANY REQUIRED FILL SHALL BE CLEAN WELL GRADED SAND TO OPSS 1004 UNLESS OTHERWISE DIRECTED BY GEOTECHNICAL ENGINEER. FILL SHALL BE COMPACTED TO NOT LESS THAN 95% OF CORRECTED MAXIMUM DRY DENSITY. FILL MATERIAL AND THE PLACEMENT AND COMPACTION OF THE FILL MATERIAL AS PER THE GEOTECHNICAL REPORT AND TO THE SATISFACTION OF THE GEOTECHNICAL CONSULTANT. PLACE MATERIAL IN UNIFORM LAYERS NOT EXCEEDING 300mm COMPACTED THICKNESS.
5.10 PROTECT WORK AREA AGAINST FLOODING AND DAMAGE DUE TO SURFACE RUN-OFF. DEWATER AS REQUIRED TO KEEP WORK AREA FREE OF WATER. DISCHARGE FROM DEWATERING OPERATIONS SHALL BE DIRECTED TO A SEDIMENT CONTROL MEASURE AND/OR A VEGETATED DISCHARGE AREA. ENSURE THAT THE DISCHARGED WATER DOES NOT CAUSE EROSION OR OTHER DAMAGE TO ADJACENT LANDS.
5.11 EXCAVATION, TRENCHING, & BACKFILL:
A. SHORE AND BRACE EXCAVATIONS, PROTECT SLOPES AND BANKS AND PERFORM ALL WORK IN ACCORDANCE WITH ONTARIO REGULATION 213/91 UNDER THE ONTARIO OCCUPATIONAL HEALTH AND SAFETY ACT AND OTHER AUTHORITIES HAVING JURISDICTION.
B. KEEP EXCAVATIONS FREE OF WATER WHILE WORK IS IN PROGRESS. PROTECT OPEN EXCAVATIONS AGAINST FLOODING AND DAMAGE DUE TO SURFACE RUN-OFF.
C. EXCAVATION SHALL NOT INTERFERE WITH BEARING CAPACITY OF ADJACENT FOUNDATIONS.
D. DO NOT OBSTRUCT FLOW OF SURFACE DRAINAGE OR NATURAL WATERCOURSES.
E. EXCAVATE TO LINES, GRADES, ELEVATIONS AND DIMENSIONS AS INDICATED.
F. EARTH BOTTOMS OF EXCAVATIONS TO BE UNDISTURBED SOIL, LEVEL, FREE FROM LOOSE, SOFT OR ORGANIC MATTER.
G. ALL STRUCTURES WITHIN PAVED AREAS SHALL HAVE 4:1 FROST TAPERS FROM FROST LINE TO SUB-GRADE.
H. CORRECT OVER-EXCAVATION WITH GRANULAR A COMPACTED TO NOT LESS THAN 95% OF CORRECTED MAXIMUM DRY DENSITY.
I. SUB-GRADE AND AREAS TO BE BACKFILLED TO BE FREE FROM DEBRIS, SNOW, ICE, WATER AND FROZEN GROUND.
J. DO NOT USE BACKFILL MATERIAL WHICH IS FROZEN OR CONTAINS ICE, SNOW OR DEBRIS.
K. PIPE BEDDING AND SURROUND MATERIAL SHALL BE OPSS GRANULAR A. RE-CYLCLED GRANULAR MATERIALS ARE NOT PERMITTED.
L. DO NOT USE BEDDING, SURROUND OR BACKFILL MATERIAL WHICH IS FROZEN OR CONTAINS ICE, SNOW OR DEBRIS.
M. PIPE BEDDING SHALL BE 150mm THICK. SHAPE BED TRUE TO GRADE AND TO PROVIDE CONTINUOUS, UNIFORM BEARING SURFACE FOR PIPE.
N. PLACE SURROUND MATERIAL AROUND PIPES TO FULL WIDTH OF TRENCH AND TO 300mm ABOVE PIPES.
O. PLACE BEDDING AND SURROUND MATERIAL IN UNIFORM LAYERS NOT EXCEEDING 150mm COMPACTED THICKNESS. PLACE FILL AND BACKFILL MATERIAL IN UNIFORM LAYERS NOT EXCEEDING 300mm COMPACTED THICKNESS.
P. COMPACT EACH LAYER TO 95% OF CORRECTED DRY DENSITY BEFORE PLACING SUCCEEDING LAYER.
Q. DO NOT BACKFILL AROUND OR OVER CAST-IN-PLACE CONCRETE WITHIN 24 HOURS AFTER PLACING OF CONCRETE.
R. BACKFILL MATERIALS WITHIN 1.8m OF PROPOSED GRADE SHALL MATCH THE MATERIALS EXPOSED ON THE TRENCH WALLS. BACKFILL BELOW 1.8m OF THE PROPOSED CAN CONSIST OF EITHER ACCEPTABLE NATIVE MATERIAL; ROCK; OR IMPORTED GRANULAR MATERIAL CONFORMING TO OPSS GRANULAR B TYPE I OR II. ANY ORGANIC SOILS OR TOPSOIL, IF ENCOUNTERED, SHALL BE REMOVED FROM THE EXCAVATION. IF ROCK IS USED AS BACKFILL IT SHALL BE WELL SHATTERED AND GRADED AND 200mm OR SMALLER IN DIAMETER. TO PREVENT INGRESS OF FINE MATERIAL INTO VOIDS IN THE ROCK FILL, THE UPPER SURFACE OF THE ROCK FILL SHALL BE COVERED WITH 150mm LAYER OF COMPACTED, WELL GRADED CRUSHED STONE PLACED ON GEOTEXTILE FABRIC.
5.12 PIPES:
A. HANDLE PIPE USING METHODS APPROVED BY MANUFACTURER.
B. LAY, CUT AND JOIN PIPES IN ACCORDANCE WITH MANUFACTURER'S RECOMMENDATIONS.
C. USE ONLY FITTINGS AS RECOMMENDED BY PIPE MANUFACTURER.
D. LAY PIPES ON PREPARED BED, TRUE TO LINE AND GRADE AND ENSURE BARREL OF EACH PIPE IS IN CONTACT WITH SHAPED BED THROUGHOUT ITS FULL LENGTH, FREE OF SAGS OR HIGH POINTS.
E. DO NOT EXCEED MAXIMUM JOINT DEFLECTION RECOMMENDED BY PIPE MANUFACTURER.
F. WHENEVER WORK IS SUSPENDED, INSTALL REMOVABLE WATERTIGHT BULKHEAD AT OPEN END OF LAST PIPE LAID TO PREVENT ENTRY OF FOREIGN MATERIALS.
G. WHEN STOPPAGE OF WORK OCCURS, BLOCK PIPES TO PREVENT CREEP DURING DOWN TIME. MAKE WATERTIGHT CONNECTIONS TO MANHOLES.
H. JOINTS SHALL BE STRUCTURALLY SOUND AND WATERTIGHT.
I. REPAIR OR REPLACE PIPE, PIPE JOINT OR BEDDING FOUND DEFECTIVE.
5.13 MANHOLES:
A. JOINTS: SHALL BE MADE WATERTIGHT.
B. SET PRECAST CONCRETE BASE ON 150mm MINIMUM OF GRANULAR BEDDING COMPACTED TO 100% CORRECTED MAXIMUM DRY DENSITY.
C. MAKE EACH JOINT WATERTIGHT WITH RUBBER RING GASKETS.
D. PLACE GRANULAR BACKFILL MATERIALS IN A UNIFORM LAYERS TO COMPACTED THICKNESS OF 150mm, COMPACT TO 95% CORRECTED MAXIMUM DRY DENSITY.
E. PLACE FRAME AND COVER ON TOP SECTION TO ELEVATION AS INDICATED. IF ADJUSTMENT REQUIRED USE CONCRETE RINGS TO A MAXIMUM OF 300mm.
F. CLEAN UNITS OF DEBRIS, FOREIGN AND SURPLUS MATERIALS. REMOVE FINS AND SHARP PROJECTIONS. PREVENT DEBRIS FROM ENTERING SYSTEM.
G. PERFORM FIELD TESTS FOR QUALITY CONTROL OF ALL SANITARY SEWERS. SPECIFICALLY, THE LEAKAGE TESTING SHALL BE COMPLETED IN ACCORDANCE WITH OPSS 407.
5.14 MAINTAIN RECORD DRAWINGS AND ACCURATELY RECORD DEVIATIONS FROM THE ORIGINAL CONTRACT DOCUMENTS CAUSED BY SITE CONDITIONS AND CHANGES MADE BY CHANGE ORDER OR ADDITIONAL INSTRUCTIONS. UPDATE DAILY AND MAKE AVAILABLE ON-SITE FOR REVIEW THROUGHOUT THE CONSTRUCTION PERIOD. RECORD DRAWINGS SHALL INCLUDE BUT NOT NECESSARILY LIMITED TO CHANGES OF DIMENSION AND DETAIL; CHANGES TO GRADE ELEVATIONS; AND HORIZONTAL AND VERTICAL LOCATIONS OF UNDERGROUND SERVICES, UTILITIES AND APPURTENANCES REFERENCED TO A PERMANENT SURFACE STRUCTURE. SUBMIT A RECORD DRAWING OF "AS-BUILT" GRADE ELEVATIONS, PREPARED BY AN OLS SURVEYOR, TO THE ENGINEER AT THE END OF CONSTRUCTION.
5.15 REINSTATE ALL AREAS DISTURBED BY CONSTRUCTION. REINSTATE PAVEMENTS, CURBS AND SIDEWALKS, TO THICKNESS, STRUCTURE AND ELEVATION WHICH EXISTED BEFORE CONSTRUCTION. REINSTATE LANDSCAPED AREAS TO THE CONDITION AND ELEVATION WHICH EXISTED BEFORE CONSTRUCTION.
5.16 CLEAN AND REINSTATE AREAS AFFECTED BY THE WORK.

APPROVED
By Adam Brown at 1:26 pm, Jun 04, 2025

ADAM BROWN
MANAGER, DEVELOPMENT REVIEW - RURAL
PLANNING, REAL ESTATE & ECONOMIC DEVELOPMENT
DEPARTMENT, CITY OF OTTAWA

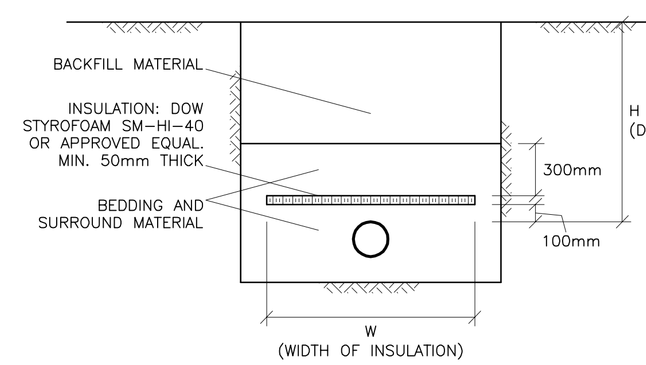

H (DEPTH OF COVER)	INSULATION THICKNESS	W (WIDTH OF INSULATION)
1400 TO 2000mm	50mm	1200mm + DIAMETER OF PIPE
1100 TO 1400mm	75mm	1800mm + DIAMETER OF PIPE
800 TO 1100mm	100mm	2400mm + DIAMETER OF PIPE
LESS THAN 800mm	125mm	3000mm + DIAMETER OF PIPE

INSULATE SEWER AS INDICATED AND WHERE DEPTH OF COVER IS LESS THAN 2000mm.
CENTER INSULATION OVER PIPE.
JOINTS BETWEEN SHEETS OF INSULATION SHALL BE STAGGERED.

INSULATION OF SEWERS IN SHALLOW TRENCHES
N.T.S

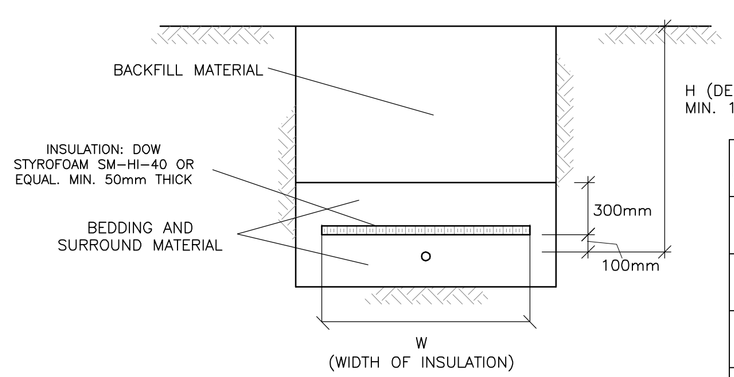
BACKFILL MATERIAL
INSULATION: DOW STYROFOAM SM-HI-40 OR EQUAL. MIN. 50mm THICK
BEDDING AND SURROUND MATERIAL
H (DEPTH OF COVER) MIN. 1