APPROVED
By Lily Xu at 11:47 am, Apr 22, 2025

LILY XU, MCIP, RPP
MANAGER, DEVELOPMENT REVIEW SOUTH
PLANNING, DEVELOPMENT, AND BUILDING SERVICES
DEPARTMENT, CITY OF OTTAWA

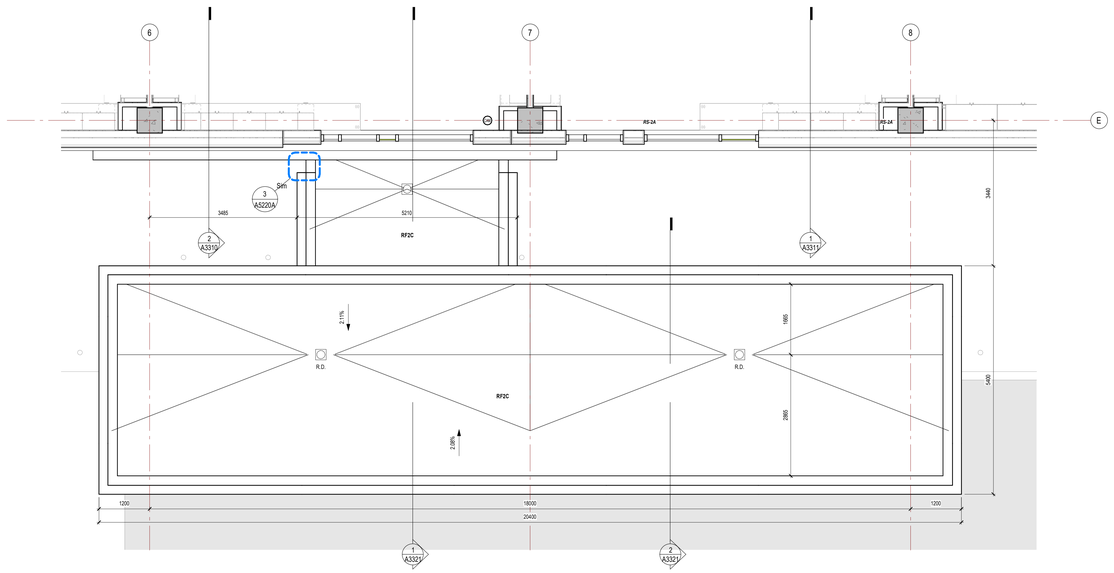

3 A1801 L1 MAIN CANOPY - ROOF PLAN
1 : 50

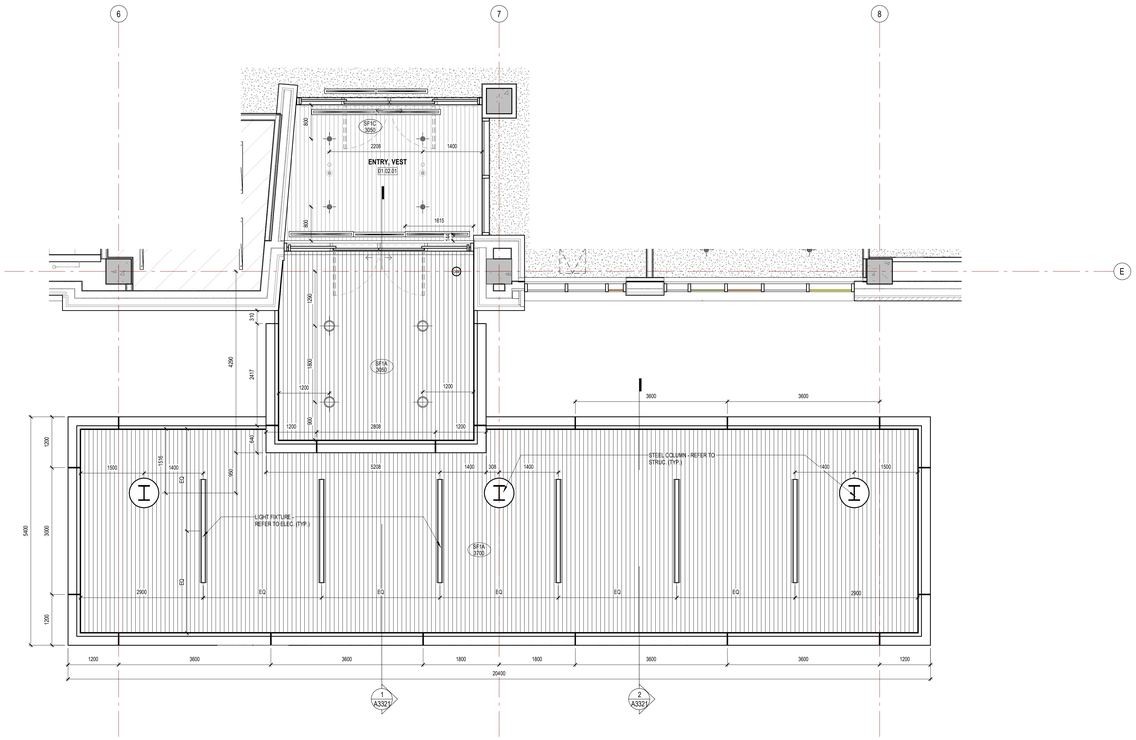

2 A1801 L1 MAIN CANOPY - RCP
1 : 50

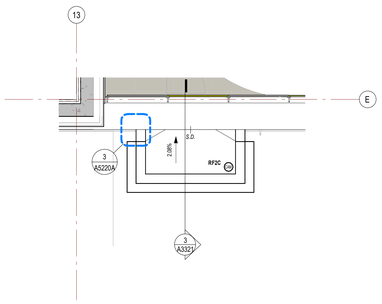

6 A1801 L1 STAFF ENTRANCE CANOPY - ROOF PLAN
1 : 50

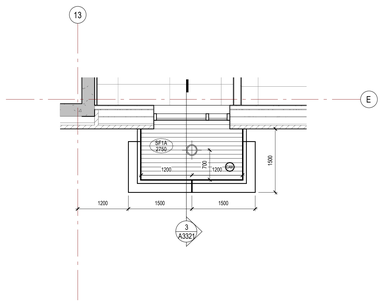

5 A1801 L1 STAFF ENTRANCE CANOPY - RCP
1 : 50

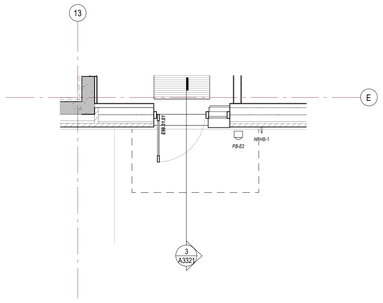

4 A1801 L1 STAFF ENTRANCE CANOPY - PLAN
1 : 50

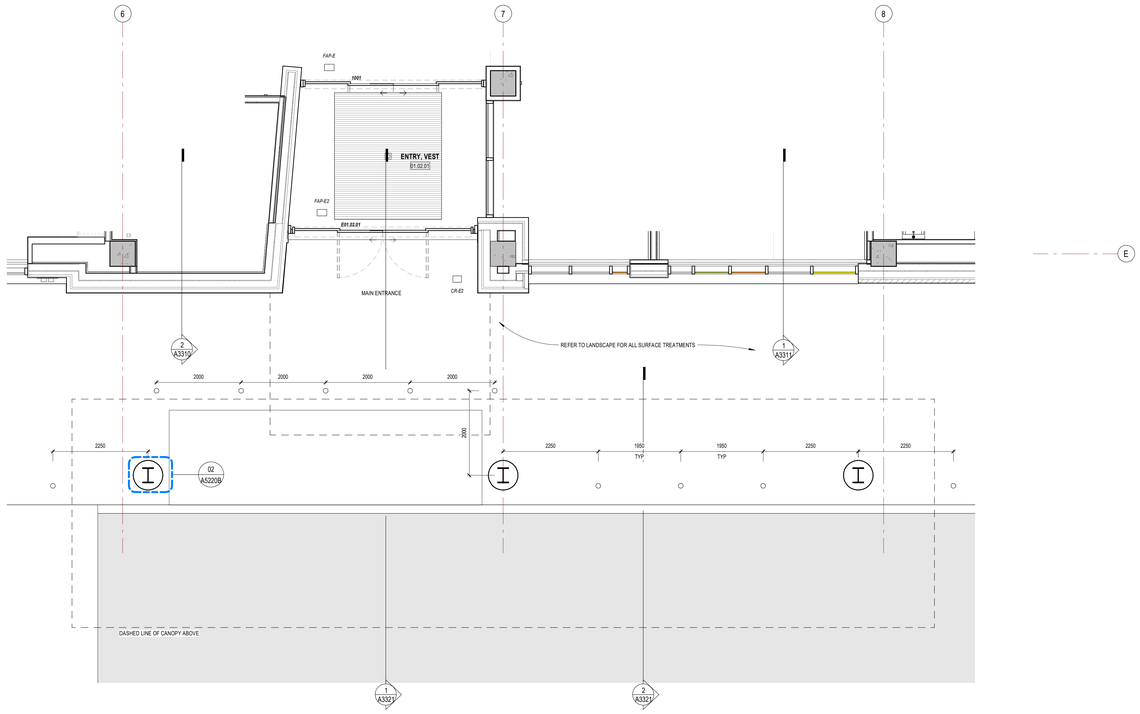

1 A1801 L1 MAIN CANOPY - PLAN
1 : 50

CHEO
Infrastructure Ontario
EllisDon INFRASTRUCTURE Healthcare

Montgomery Sisam Architects Inc.
197 Spadina Avenue, Toronto, Ontario M5T 2C8 montgomerysisam.com
Tel 416.364.8079 Fax 416.364.7723
MontgomerySisam

PROJECT NORTH (PN)
KEYPLAN

#	date:	revision:
9	25/04/01	ISSUED FOR SITE PLAN CONTROL RESUBMISSION
8	25/03/31	ISSUED FOR 100% CONSTRUCTION DOCUMENTS R1
7	24/11/27	ISSUED FOR 100% CONSTRUCTION DOCUMENTS
6	24/09/23	ISSUED FOR BUILDING PERMIT
5	24/08/23	ISSUED FOR SITE PLAN CONTROL
4	24/08/07	ISSUED FOR 50% CONSTRUCTION DOCUMENTS
3	24/05/24	ISSUED FOR STEEL TENDER
2	24/04/19	ISSUED FOR 100% DESIGN DEVELOPMENT
1	23/12/15	ISSUED FOR SPC DRAFT
0	23/12/15	ISSUED FOR 50% DESIGN DEVELOPMENT

revisions

ONTARIO ASSOCIATION OF ARCHITECTS
JASON DOBBIN
LICENCE
7571

All drawing and specifications are the property of the architect. The contractor shall verify all dimensions and information on site and report any discrepancy to architect before proceeding.

CHEO Integrated Treatment Centre

401 Smyth Rd
Ottawa, ON K1H 8L1

L1 MAIN CANOPY/ENTRANCES

scale:	1 : 50
drawn by:	MSA
reviewed by:	JS/JD
job number:	22004
plot date:	250207

drawing number:
A1801

File Number: **D07-12-24-0121**
Plan Number: **19223**

2025-04-02 11:15:10 AM Autodesk Docs://22004_CHEO_RZ2022004_CHC-CHEO_MSA_MAIN_RZ2.rvt