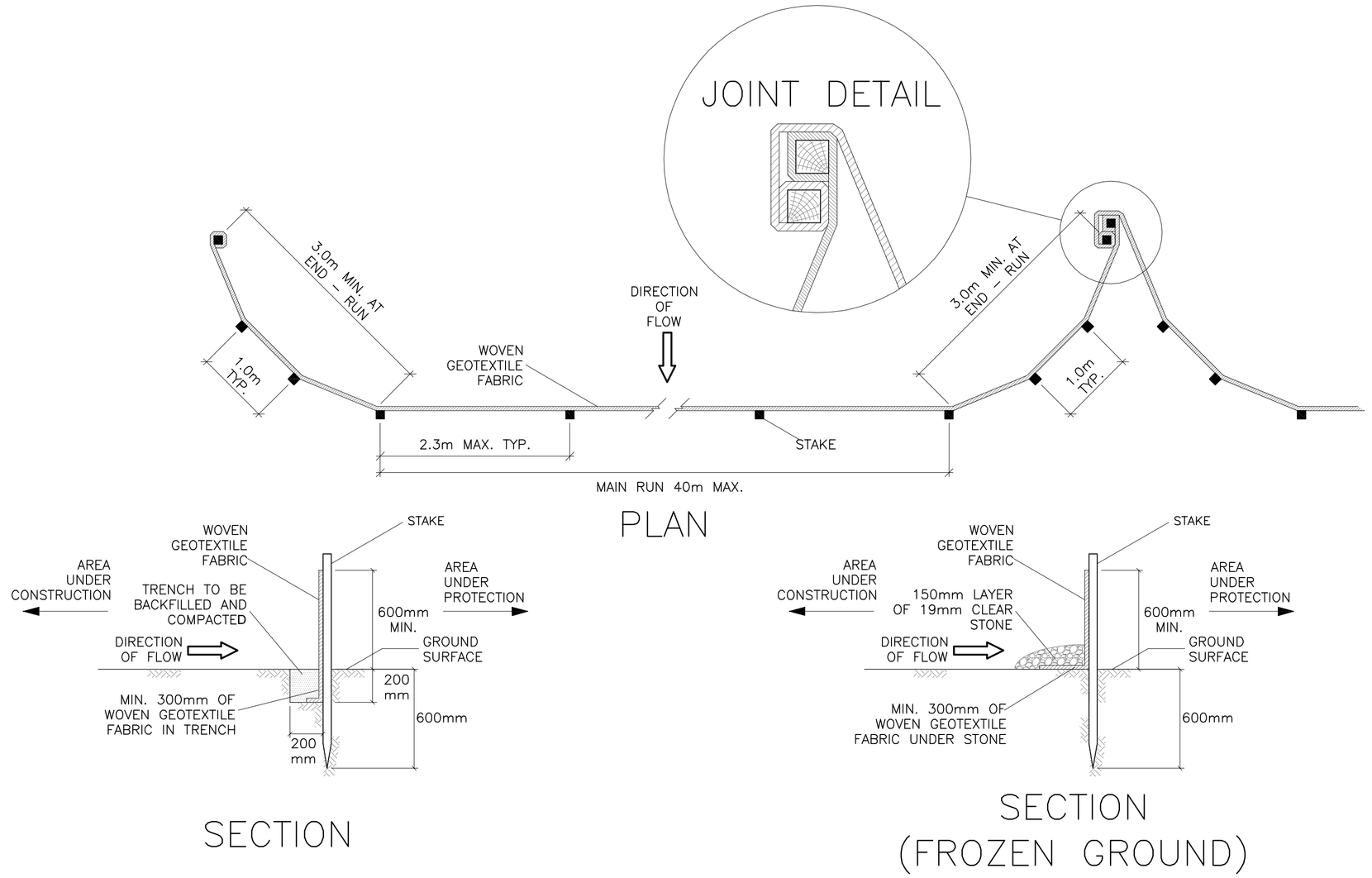

SILT FENCE BARRIER

AS PER OPSD 219.110

(MODIFIED FOR FROZEN GROUND)

N.T.S.

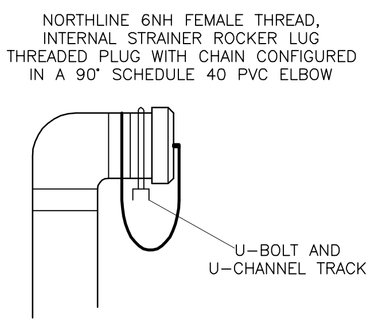

DRAW PIPE

AS PER CITY OF OTTAWA DRAWING No. W52

N.T.S.

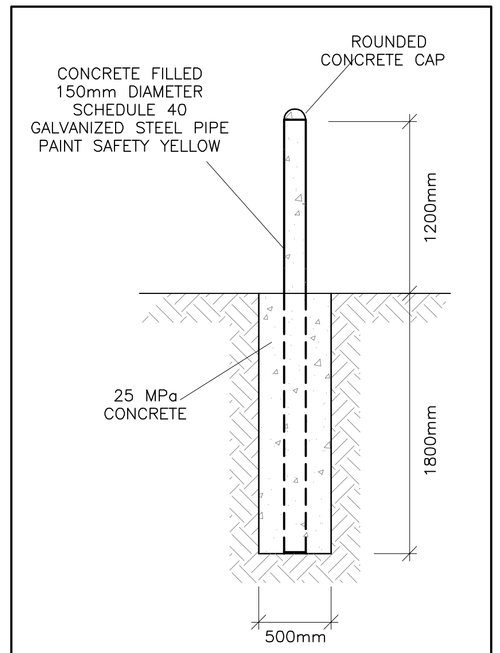

BOLLARDS (TYPICAL)

N.T.S.

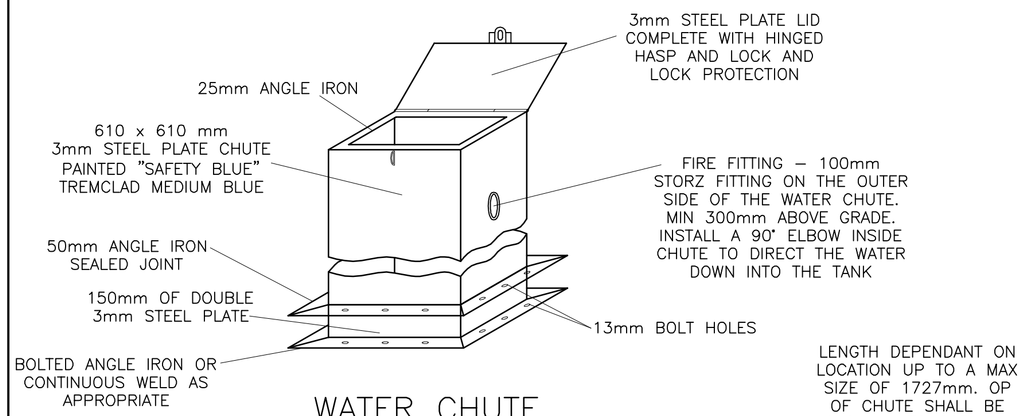

WATER CHUTE

AS PER CITY OF OTTAWA DRAWING No. W51

N.T.S.

KEY PLAN

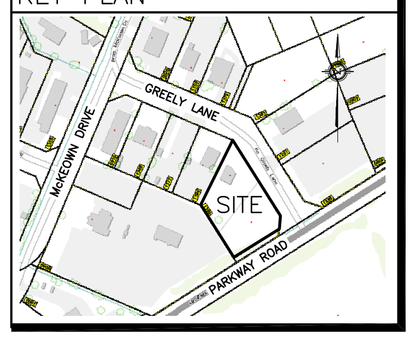

No.	DATE	REVISION
4	MAR 24–25	RE–ISSUED FOR APPROVAL
3	MAR 6–25	RE–ISSUED FOR APPROVAL
2	JAN 13–25	ISSUED FOR APPROVAL
1	DEC 18–24	ISSUED FOR COORDINATION

CATCH BASIN & MANHOLE SCHEDULE

(SUBMIT SHOP DRAWINGS OF ALL CATCH BASINS & MANHOLES TO ENGINEER FOR APPROVAL)

REF	TOP	SIZE	TYPE	INVERT AT INLET	INVERT AT OUTLET	NOTES
STORM SEWER						
CB/MH–1	99.67	1200mm	PRECAST CONCRETE CATCH–BASIN/MANHOLE	98.47(N)	98.47(SE)	TO OPSD 701.010 & CITY OF OTTAWA STANDARDS – FRAME & COVER TO CITY OF OTTAWA DRAWING No. S25 & S28.1 OR OPSD 401.010
CB/MH–2	99.67	1200mm	PRECAST CONCRETE CATCH–BASIN/MANHOLE	98.40(NW)	98.40(SE)	TO OPSD 701.010 & CITY OF OTTAWA STANDARDS – FRAME & COVER TO CITY OF OTTAWA DRAWING No. S25 & S28.1 OR OPSD 401.010
CB/MH–3	99.67	1200mm	PRECAST CONCRETE CATCH–BASIN/MANHOLE	98.32(NW)	98.32(NE)	TO OPSD 701.010 & CITY OF OTTAWA STANDARDS – FRAME & COVER TO CITY OF OTTAWA DRAWING No. S25 & S28.1 OR OPSD 401.010
CB/MH–4	99.67	1200mm	PRECAST CONCRETE CATCH–BASIN/MANHOLE	98.25(NE) 98.25(SW)	98.25(SE)	TO OPSD 701.010 & CITY OF OTTAWA STANDARDS – FRAME & COVER TO CITY OF OTTAWA DRAWING No. S25 & S28.1 OR OPSD 401.010 INSTALL ICD IN OUTLET PIPE
CB–5	99.71	600mm x 600mm	PRECAST CONCRETE CATCH–BASIN	–	98.47	TO OPSD 705.010 & CITY OF OTTAWA STANDARDS – FRAME & COVER TO CITY OF OTTAWA DRAWING No. S19
CB/MH–6	99.67	1200mm	PRECAST CONCRETE CATCH–BASIN/MANHOLE	98.39(NW)	98.39(SE)	TO OPSD 701.010 & CITY OF OTTAWA STANDARDS – FRAME & COVER TO CITY OF OTTAWA DRAWING No. S25 & S28.1 OR OPSD 401.010
CB/MH–7	99.67	1200mm	PRECAST CONCRETE CATCH–BASIN/MANHOLE	98.32(NW)	98.32(SW)	TO OPSD 701.010 & CITY OF OTTAWA STANDARDS – FRAME & COVER TO CITY OF OTTAWA DRAWING No. S25 & S28.1 OR OPSD 401.010
MH–8	99.85	CDS PMSU2015–4	PRECAST CONCRETE MANHOLE	98.23(NW)	98.23(SE)	TO OPSD 701.010 & CITY OF OTTAWA STANDARDS EXCEPT WITH A DEEP SUMP AS REQUIRED BY CDS

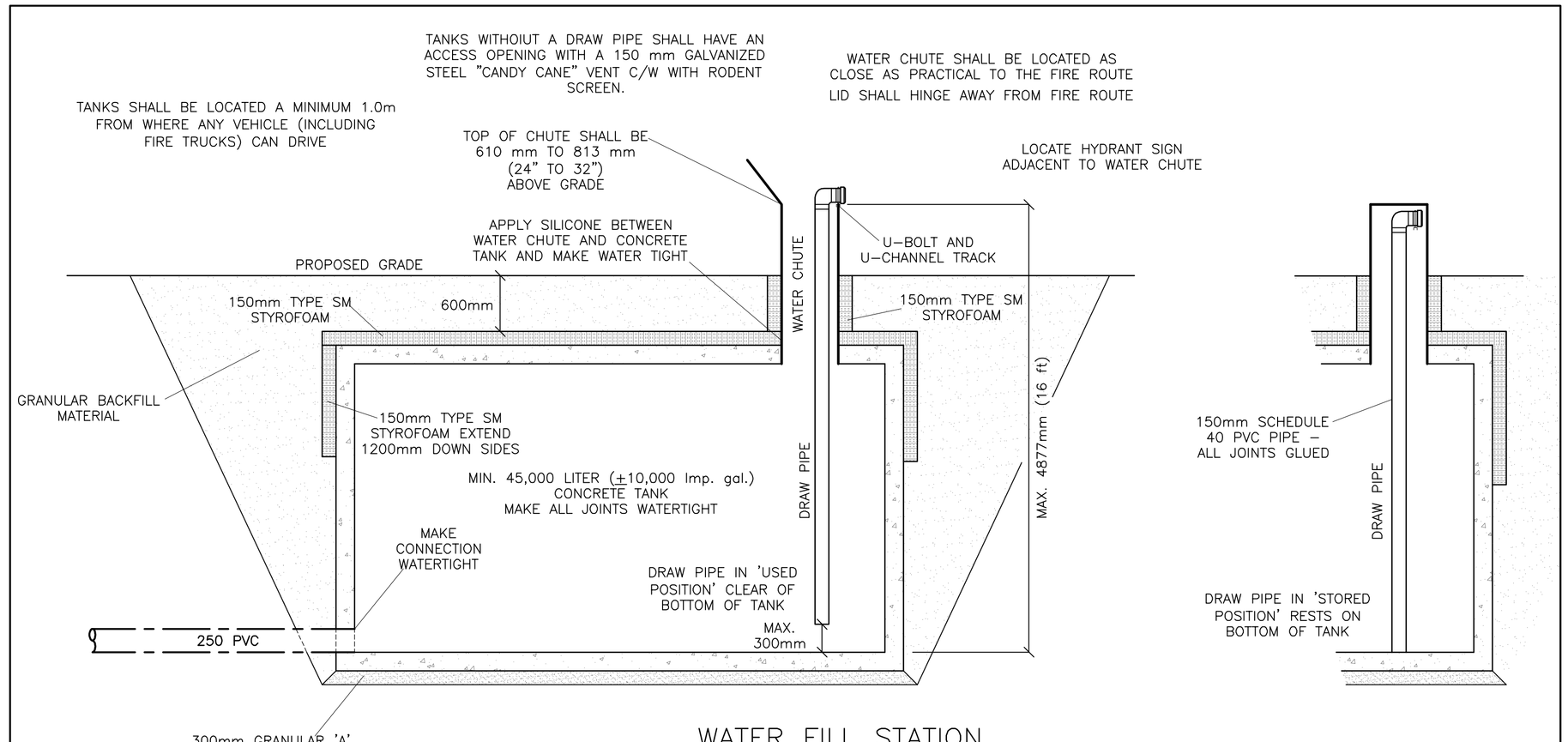

WATER FILL STATION

(WATER SUPPLY FOR FIRE PROTECTION)

AS PER CITY OF OTTAWA DRAWING No. W52

N.T.S.

D. B. GRAY ENGINEERING INC.

Stormwater Management - Grading & Drainage - Storm & Sanitary Sewers - Watermains

700 Long Point Circle 613-425-8044

Ottawa, Ontario d.gray@dbgrayengineering.com

Project

PROPOSED 1–STOREY BUILDING 1386–1394 GREELY LANE

GREELY, ONTARIO

Drawing Title

DETAILS & SCHEDULE

Engineer's Seal

LICENSED PROFESSIONAL ENGINEER D.B. GRAY 17016502 MAR 24–25 PROVINCE OF ONTARIO

NOT VALID UNLESS SIGNED & DATED

Drawn	D.B.G.
H. Scale	
V. Scale	
Date	SEP 20–24
Job No.	24015

Drawing No.

C–8 of 9

D07–12–25–0004