REFER TO NOTES, DETAILS & SCHEDULES ON DRAWINGS C–8 & C–9

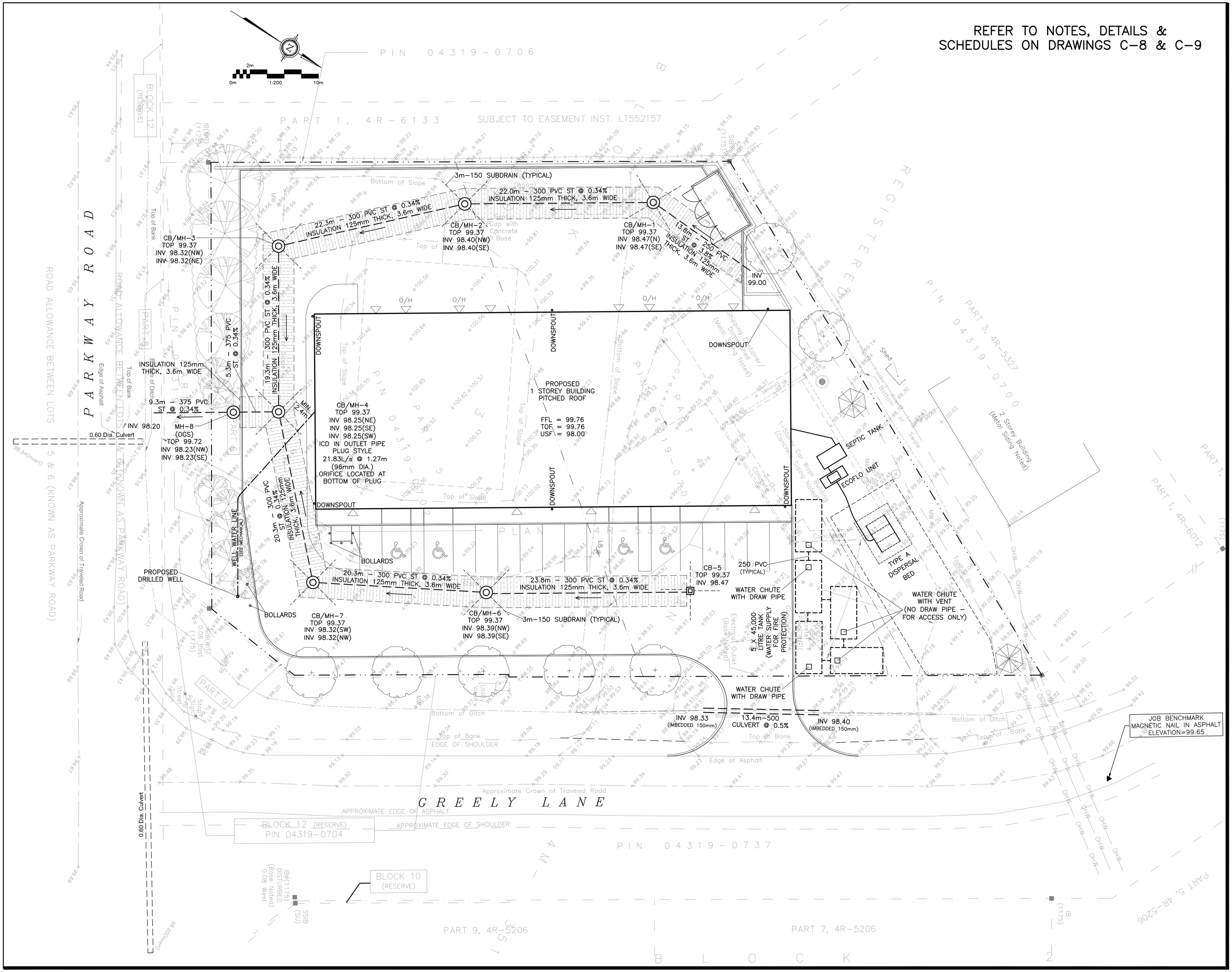

LEGEND

FFL	FIRST FLOOR ELEVATION
TOF	TOP OF FOUNDATION
USF	UNDERSIDE OF FOOTING
	PROPERTY LINE
CB	CATCH BASIN
CB/MH	CATCH BASIN/MANHOLE
MH	SANITARY MANHOLE
SAN	SANITARY SEWER
ST	STORM SEWER
WL	WATER LINE
INV	INVERT OF PIPE
T.O.S	TOP OF SLOPE
B.O.S	BOTTOM OF SLOPE
	CENTERLINE OF SWALE
	150mm BARRIER CURB
D.C	DEPRESSED CURB

KEY PLAN

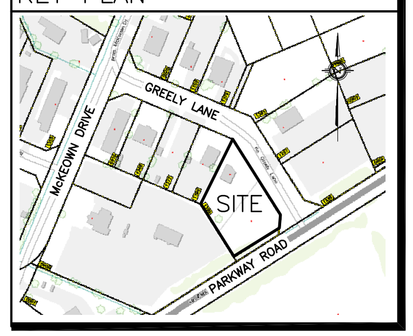

No.	DATE	REVISION
3	JAN 13–25	ISSUED FOR APPROVAL
2	DEC 18–24	ISSUED FOR COORDINATION
1	SEP 20–24	PRELIMINARY

D. B. GRAY ENGINEERING INC.
Stormwater Management · Grading & Drainage · Storm & Sanitary Sewers · Watermains
700 Long Point Circle 613-425-8044
Ottawa, Ontario d.gray@dbgrayengineering.com

Project

PROPOSED
1–STOREY BUILDING
1386–1394 GREELY LANE
GREELY, ONTARIO

Drawing Title

SITE SERVICING PLAN

Engineer's Seal

LICENSED PROFESSIONAL ENGINEER
D.B. GRAY
17016502
JAN 13–25
PROVINCE OF ONTARIO

NOT VALID UNLESS SIGNED & DATED

Drawn	D.B.G
H. Scale	1:200
V. Scale	
Date	SEP 20–24
Job No.	24015

Drawing No.

C–1
of 9

REFER TO NOTES, DETAILS &
SCHEDULES ON DRAWINGS C–8 & C–9

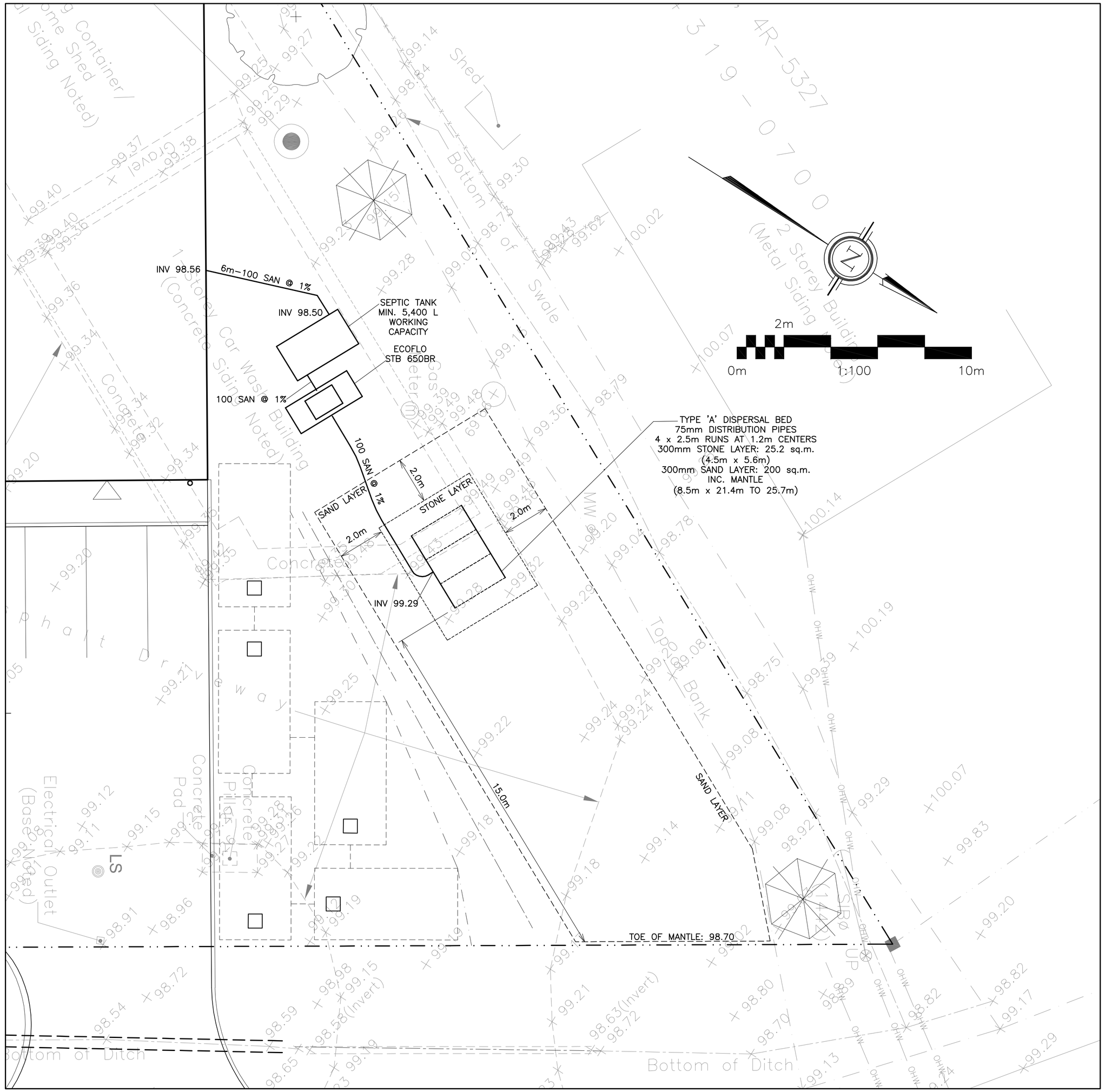

LEGEND

FFL	FIRST FLOOR ELEVATION
TOF	TOP OF FOUNDATION
USF	UNDERSIDE OF FOOTING
	PROPERTY LINE
CB	CATCH BASIN
CB/MH	CATCH BASIN/MANHOLE
MH	SANITARY MANHOLE
SAN	SANITARY SEWER
ST	STORM SEWER
WL	WATER LINE
INV	INVERT OF PIPE
T.O.S	TOP OF SLOPE
B.O.S	BOTTOM OF SLOPE
	CENTERLINE OF SWALE
	150mm BARRIER CURB
D.C	DEPRESSED CURB

KEY PLAN

No.	DATE	REVISION
2	JAN 13–25	ISSUED FOR APPROVAL
1	DEC 18–24	ISSUED FOR COORDINATION

D. B. GRAY ENGINEERING INC.
Stormwater Management · Grading & Drainage · Storm & Sanitary Sewers · Watermains
700 Long Point Circle 613-425-8044
Ottawa, Ontario d.gray@dbgrayengineering.com

Project
PROPOSED
1–STOREY BUILDING
1386–1394 GREELY LANE
GREELY, ONTARIO

Drawing Title
SEPTIC SYSTEM

Engineer's Seal
LICENSED PROFESSIONAL ENGINEER
D.B. GRAY
17016502
JAN 13–25
PROVINCE OF ONTARIO
NOT VALID UNLESS
SIGNED & DATED

Drawn	D.B.G
H. Scale	1:100
V. Scale	
Date	SEP 20–24
Job No.	24015

Drawing No.
C–2
of 9

REFER TO NOTES, DETAILS & SCHEDULES ON DRAWINGS C–8 & C–9

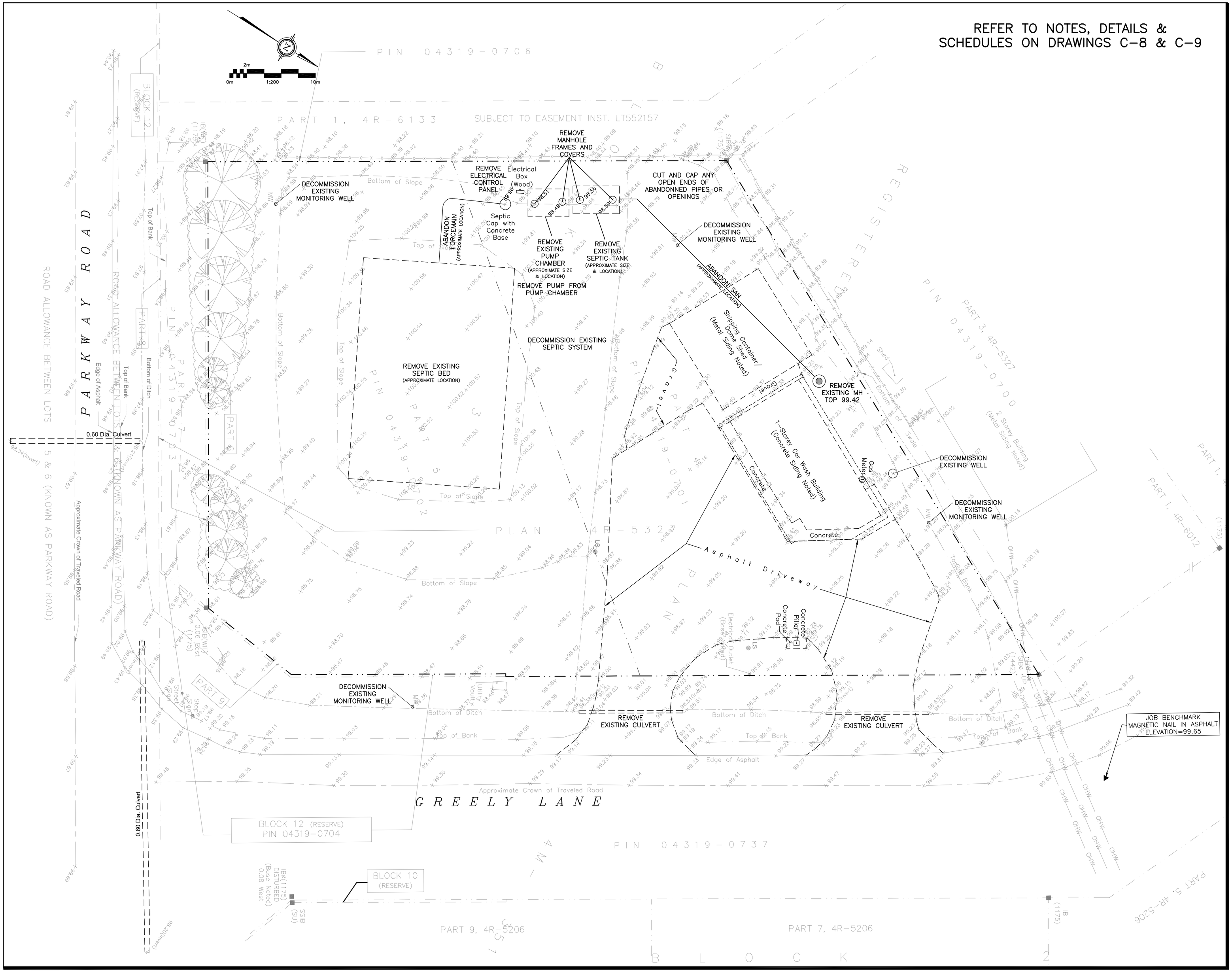

LEGEND

FFL	FIRST FLOOR ELEVATION
TOF	TOP OF FOUNDATION
USF	UNDERSIDE OF FOOTING
	PROPERTY LINE
CB	CATCH BASIN
CB/MH	CATCH BASIN/MANHOLE
MH	SANITARY MANHOLE
SAN	SANITARY SEWER
ST	STORM SEWER
WL	WATER LINE
INV	INVERT OF PIPE
T.O.S	TOP OF SLOPE
B.O.S	BOTTOM OF SLOPE
	CENTERLINE OF SWALE
	150mm BARRIER CURB
D.C	DEPRESSED CURB

KEY PLAN

No.	DATE	REVISION
2	JAN 13–25	ISSUED FOR APPROVAL
1	DEC 18–24	ISSUED FOR COORDINATION

D. B. GRAY ENGINEERING INC.
Stormwater Management - Grading & Drainage - Storm & Sanitary Sewers - Watermains
700 Long Point Circle 613-425-8044
Ottawa, Ontario d.gray@dbgrayengineering.com

Project

PROPOSED
1–STOREY BUILDING
1386–1394 GREELY LANE
GREELY, ONTARIO

Drawing Title

EXISTING CONDITIONS, REMOVALS & DECOMMISSIONING PLAN

Engineer's Seal

LICENSED PROFESSIONAL ENGINEER
D.B. GRAY
17016502
JAN 13–25
PROVINCE OF ONTARIO

NOT VALID UNLESS SIGNED & DATED

Drawn	D.B.G
H. Scale	1:200
V. Scale	
Date	SEP 20–24
Job No.	24015

Drawing No.
C–3
of 9

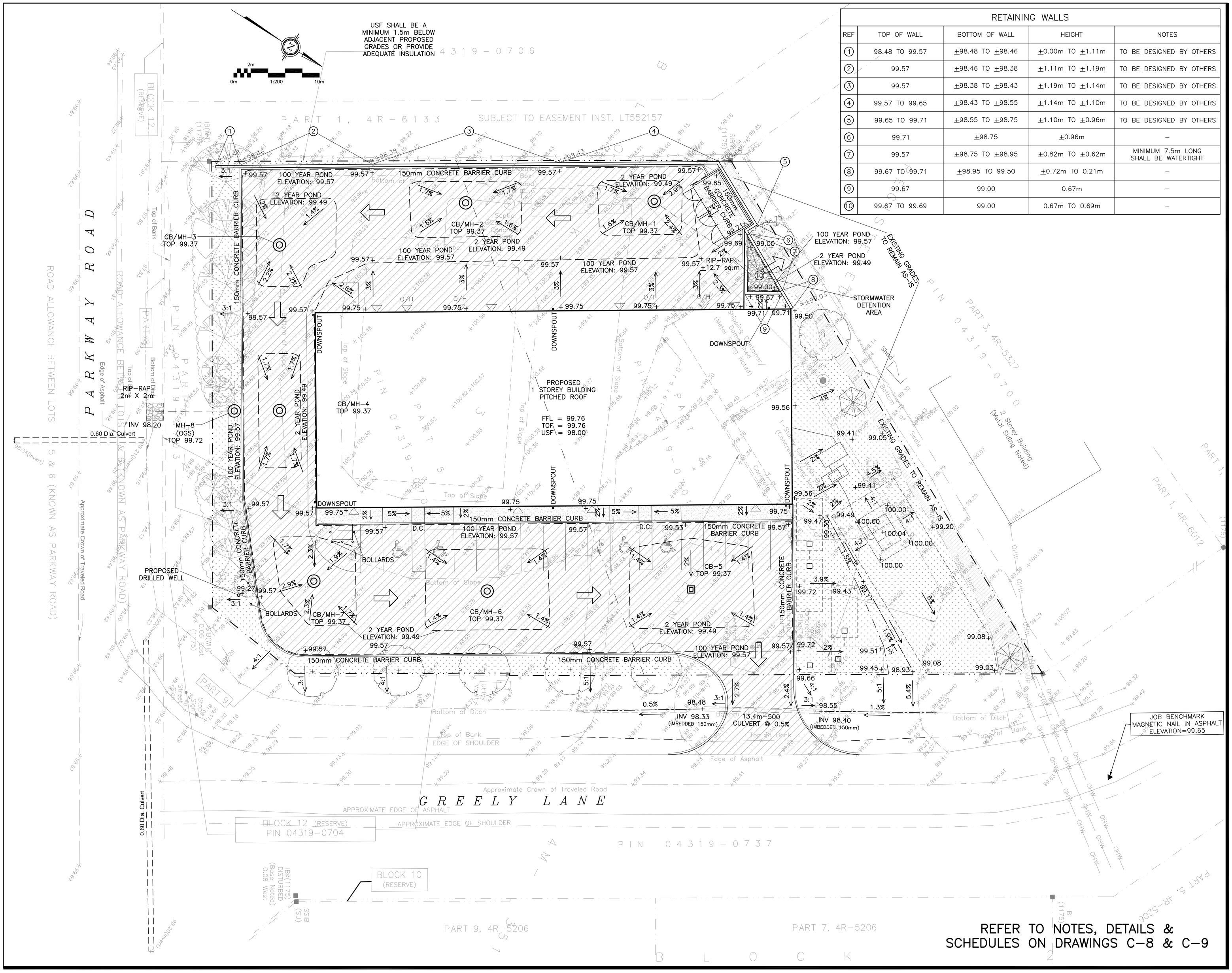

RETAINING WALLS

REF	TOP OF WALL	BOTTOM OF WALL	HEIGHT	NOTES
1	98.48 TO 99.57	±98.48 TO ±98.46	±0.00m TO ±1.11m	TO BE DESIGNED BY OTHERS
2	99.57	±98.46 TO ±98.38	±1.11m TO ±1.19m	TO BE DESIGNED BY OTHERS
3	99.57	±98.38 TO ±98.43	±1.19m TO ±1.14m	TO BE DESIGNED BY OTHERS
4	99.57 TO 99.65	±98.43 TO ±98.55	±1.14m TO ±1.10m	TO BE DESIGNED BY OTHERS
5	99.65 TO 99.71	±98.55 TO ±98.75	±1.10m TO ±0.96m	TO BE DESIGNED BY OTHERS
6	99.71	±98.75	±0.96m	–
7	99.57	±98.75 TO ±98.95	±0.82m TO ±0.62m	MINIMUM 7.5m LONG SHALL BE WATERTIGHT
8	99.67 TO 99.71	±98.95 TO 99.50	±0.72m TO 0.21m	–
9	99.67	99.00	0.67m	–
10	99.67 TO 99.69	99.00	0.67m TO 0.69m	–

LEGEND

FFL	FIRST FLOOR ELEVATION
TOF	TOP OF FOUNDATION
USF	UNDERSIDE OF FOOTING
	PROPERTY LINE
CB	CATCH BASIN
CB/MH	CATCH BASIN/MANHOLE
MH	SANITARY MANHOLE
x99.99	EXISTING GRADE ELEVATION
+99.99	PROPOSED GRADE ELEVATION
2%	EXISTING SLOPE OF GRADE
2%	PROPOSED SLOPE OF GRADE
	EMERGENCY OVERLAND FLOW
T.O.S	TOP OF SLOPE
B.O.S	BOTTOM OF SLOPE
	CENTERLINE OF SWALE
	150mm BARRIER CURB
D.C	DEPRESSED CURB
	SILT FENCE BARRIER
	ASPHALT PAVEMENT
	CONCRETE
	LANDSCAPE

KEY PLAN

No.	DATE	REVISION
2	JAN 13–25	ISSUED FOR APPROVAL
1	DEC 18–24	ISSUED FOR COORDINATION

D. B. GRAY ENGINEERING INC.
Stormwater Management - Grading & Drainage - Storm & Sanitary Sewers - Watermains
700 Long Point Circle 613-425-8044
Ottawa, Ontario d.gray@dbgrayengineering.com

Project

PROPOSED
1–STOREY BUILDING
1386–1394 GREELY LANE
GREELY, ONTARIO

Drawing Title

GRADING PLAN

Engineer's Seal

LICENSED PROFESSIONAL ENGINEER
D.B. GRAY
17016502
JAN 13–25
PROVINCE OF ONTARIO

NOT VALID UNLESS SIGNED & DATED

Drawn	D.B.G
H. Scale	1:200
V. Scale	
Date	SEP 20–24
Job No.	24015

Drawing No.
C–4
of 9

REFER TO NOTES, DETAILS & SCHEDULES ON DRAWINGS C–8 & C–9

REFER TO NOTES, DETAILS & SCHEDULES ON DRAWINGS C–8 & C–9

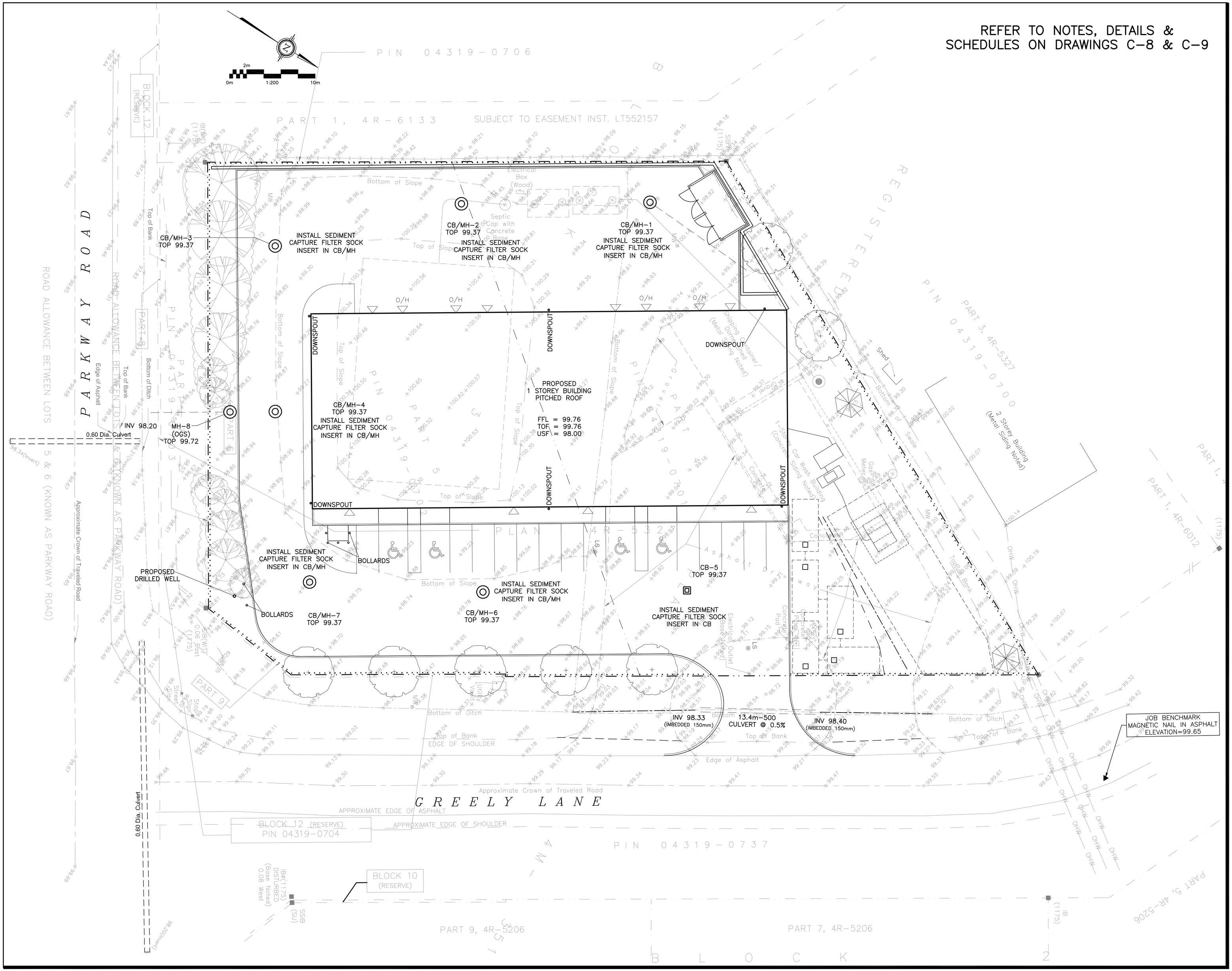

LEGEND

FFL	FIRST FLOOR ELEVATION
TOF	TOP OF FOUNDATION
USF	UNDERSIDE OF FOOTING
	PROPERTY LINE
CB	CATCH BASIN
CB/MH	CATCH BASIN/MANHOLE
MH	SANITARY MANHOLE
+99.99	EXISTING GRADE ELEVATION
+99.99	PROPOSED GRADE ELEVATION
2%	EXISTING SLOPE OF GRADE
2%	PROPOSED SLOPE OF GRADE
	EMERGENCY OVERLAND FLOW
T.O.S	TOP OF SLOPE
B.O.S	BOTTOM OF SLOPE
	CENTERLINE OF SWALE
	150mm BARRIER CURB
D.C	DEPRESSED CURB
	SILT FENCE BARRIER
	ASPHALT PAVEMENT
	CONCRETE
	LANDSCAPE

KEY PLAN

No.	DATE	REVISION
2	JAN 13–25	ISSUED FOR APPROVAL
1	DEC 18–24	ISSUED FOR COORDINATION

D. B. GRAY ENGINEERING INC.
Stormwater Management · Grading & Drainage · Storm & Sanitary Sewers · Watermains
700 Long Point Circle 613-425-8044
Ottawa, Ontario d.gray@dbgrayengineering.com

Project

PROPOSED
1–STOREY BUILDING
1386–1394 GREELY LANE
GREELY, ONTARIO

Drawing Title

EROSION & SEDIMENT CONTROL PLAN

Engineer's Seal

LICENSED PROFESSIONAL ENGINEER
D.B. GRAY
17016502
JAN 13–25
PROVINCE OF ONTARIO

NOT VALID UNLESS SIGNED & DATED

Drawn	D.B.G
H. Scale	1:200
V. Scale	
Date	SEP 20–24
Job No.	24015

Drawing No.

C–5
of 9

REFER TO NOTES, DETAILS & SCHEDULES ON DRAWINGS C–8 & C–9

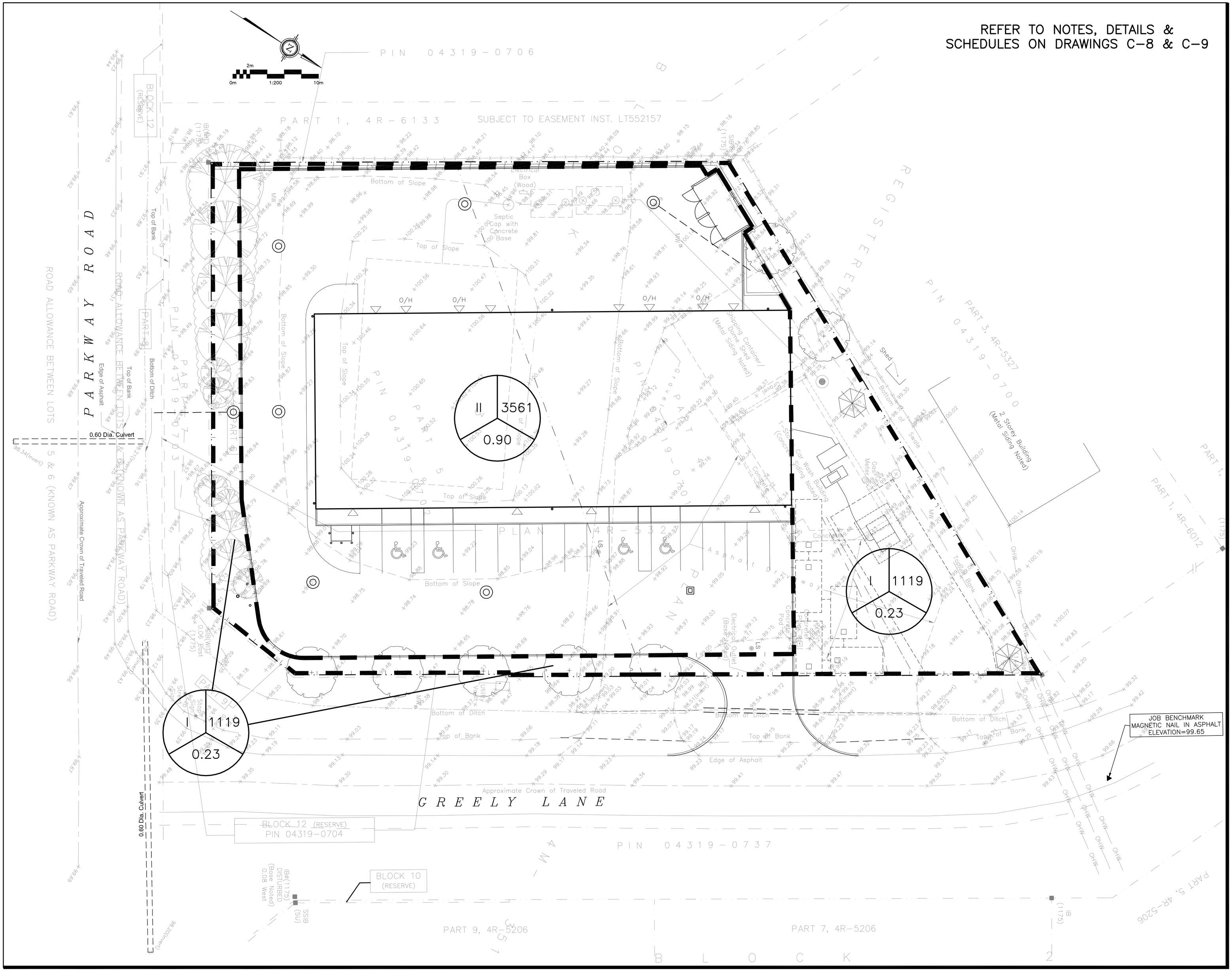

LEGEND

DRAINAGE AREA | AREA (sq.m)

X | XXX

0.XX

2 YEAR RUNOFF COEFFICIENT

KEY PLAN

No.	DATE	REVISION
2	JAN 13–25	ISSUED FOR APPROVAL
1	DEC 18–24	ISSUED FOR COORDINATION

D. B. GRAY ENGINEERING INC.

Stormwater Management - Grading & Drainage - Storm & Sanitary Sewers - Watermains

700 Long Point Circle 613-425-8044

Ottawa, Ontario d.gray@dbgrayengineering.com

Project

PROPOSED
1–STOREY BUILDING
1386–1394 GREELY LANE

GREELY, ONTARIO

Drawing Title

POST–DEVELOPMENT DRAINAGE PLAN

Engineer's Seal

LICENSED PROFESSIONAL ENGINEER
D.B. GRAY
17016502
JAN 13–25
PROVINCE OF ONTARIO

NOT VALID UNLESS SIGNED & DATED

Drawn	D.B.G
H. Scale	1:200
V. Scale	
Date	SEP 20–24
Job No.	24015

Drawing No.

C–6 of 9

REFER TO NOTES, DETAILS & SCHEDULES ON DRAWINGS C–8 & C–9

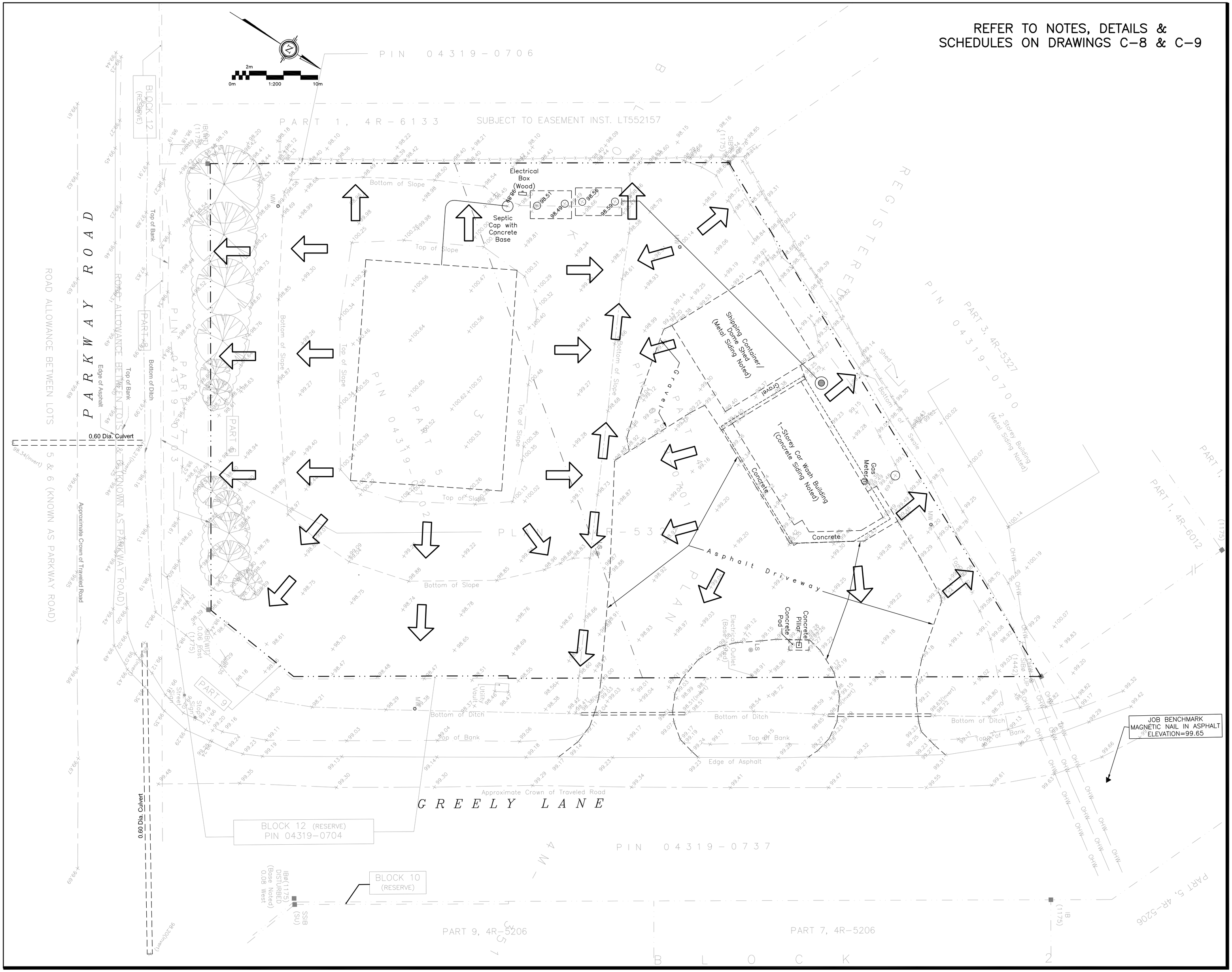

DRAINAGE PATTERN

KEY PLAN

No.	DATE	REVISION
2	JAN 13–25	ISSUED FOR APPROVAL
1	DEC 18–24	ISSUED FOR COORDINATION

D. B. GRAY ENGINEERING INC.

Stormwater Management · Grading & Drainage · Storm & Sanitary Sewers · Watermains

700 Long Point Circle 613-425-8044

Ottawa, Ontario d.gray@dbgrayengineering.com

Project

PROPOSED
1–STOREY BUILDING
1386–1394 GREELY LANE

GREELY, ONTARIO

Drawing Title

PRE–DEVELOPMENT DRAINAGE PLAN

Engineer's Seal

LICENSED PROFESSIONAL ENGINEER
D.B. GRAY
17016502
JAN 13–25
PROVINCE OF ONTARIO

NOT VALID UNLESS SIGNED & DATED

Drawn	D.B.G
H. Scale	1:200
V. Scale	
Date	SEP 20–24
Job No.	24015

Drawing No.

C–7
of 9

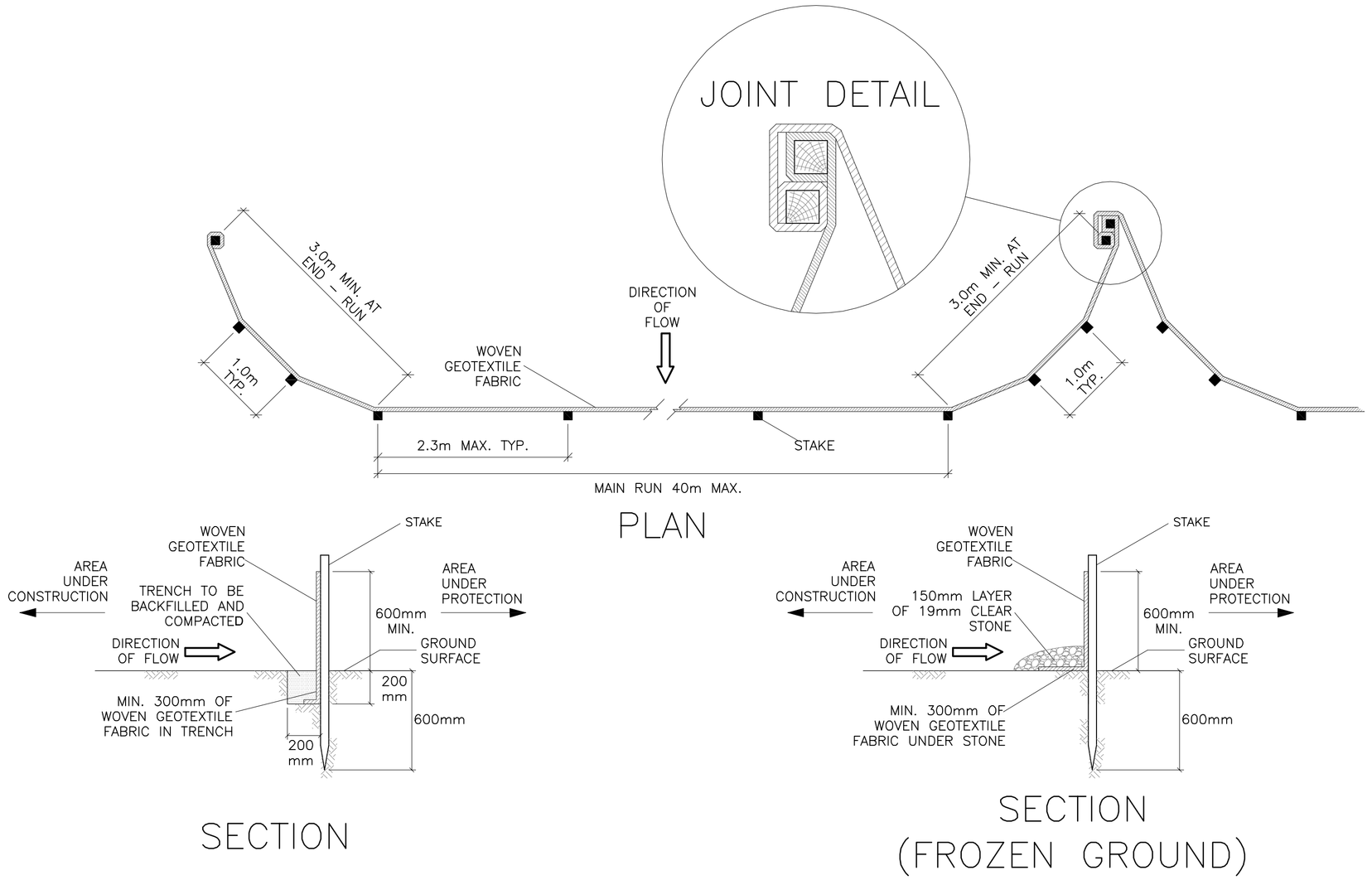

SILT FENCE BARRIER

AS PER OPSD 219.110

(MODIFIED FOR FROZEN GROUND)

N.T.S.

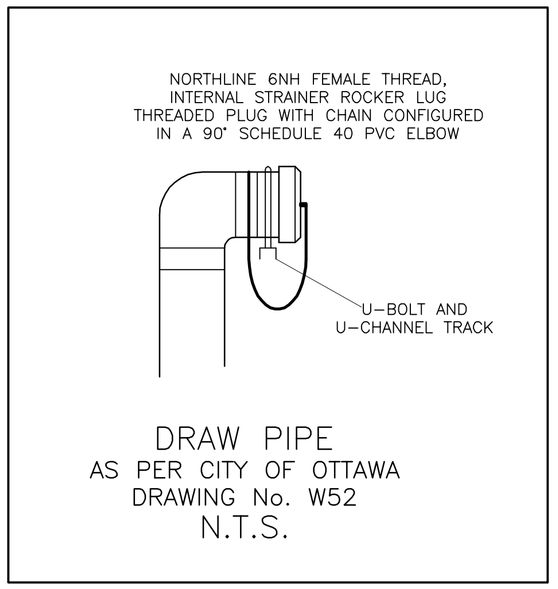

DRAW PIPE

AS PER CITY OF OTTAWA DRAWING No. W52

N.T.S.

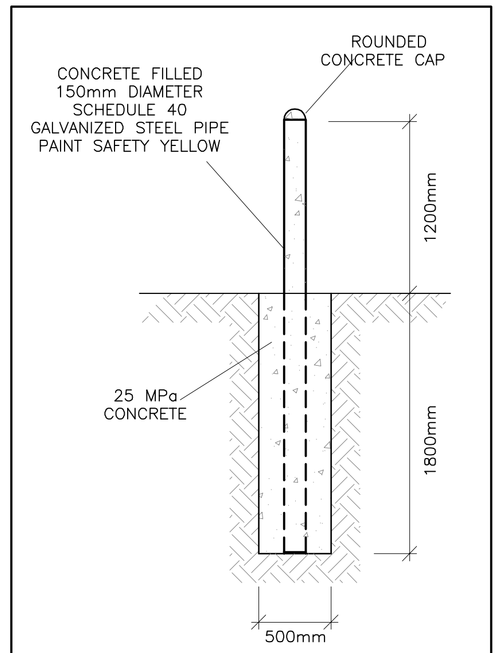

BOLLARDS (TYPICAL)

N.T.S.

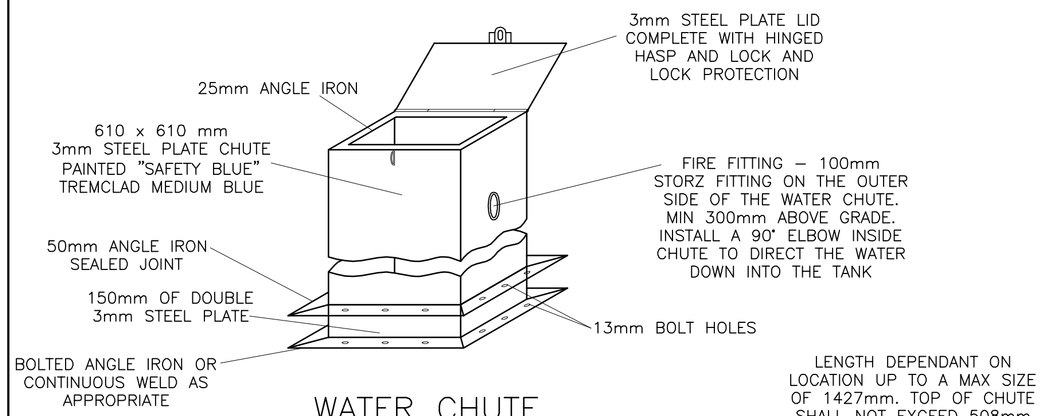

WATER CHUTE

AS PER CITY OF OTTAWA DRAWING No. W51

N.T.S.

KEY PLAN

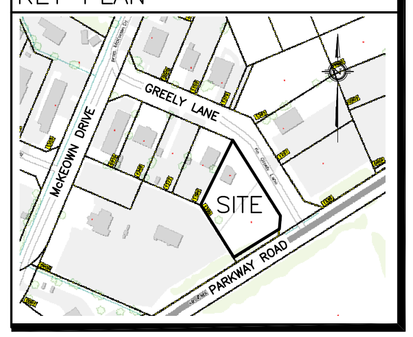

CATCH BASIN & MANHOLE SCHEDULE

(SUBMIT SHOP DRAWINGS OF ALL CATCH BASINS & MANHOLES TO ENGINEER FOR APPROVAL)

REF	TOP	SIZE	TYPE	INVERT AT INLET	INVERT AT OUTLET	NOTES
STORM SEWER						
CB/MH–1	99.37	1200mm	PRECAST CONCRETE CATCH–BASIN/MANHOLE	98.47(N)	98.47(SE)	TO OPSD 701.010 & CITY OF OTTAWA STANDARDS – FRAME & COVER TO CITY OF OTTAWA DRAWING No. S25 & S28.1 OR OPSD 401.010
CB/MH–2	99.37	1200mm	PRECAST CONCRETE CATCH–BASIN/MANHOLE	98.40(NW)	98.40(SE)	TO OPSD 701.010 & CITY OF OTTAWA STANDARDS – FRAME & COVER TO CITY OF OTTAWA DRAWING No. S25 & S28.1 OR OPSD 401.010
CB/MH–3	99.37	1200mm	PRECAST CONCRETE CATCH–BASIN/MANHOLE	98.32(NW)	98.32(NE)	TO OPSD 701.010 & CITY OF OTTAWA STANDARDS – FRAME & COVER TO CITY OF OTTAWA DRAWING No. S25 & S28.1 OR OPSD 401.010
CB/MH–4	99.37	1200mm	PRECAST CONCRETE CATCH–BASIN/MANHOLE	98.25(NE) 98.25(SW)	98.25(SE)	TO OPSD 701.010 & CITY OF OTTAWA STANDARDS – FRAME & COVER TO CITY OF OTTAWA DRAWING No. S25 & S28.1 OR OPSD 401.010 INSTALL ICD IN OUTLET PIPE
CB–5	99.37	600mm x 600mm	PRECAST CONCRETE CATCH–BASIN	–	98.47	TO OPSD 705.010 & CITY OF OTTAWA STANDARDS – FRAME & COVER TO CITY OF OTTAWA DRAWING No. S19
CB/MH–6	99.37	1200mm	PRECAST CONCRETE CATCH–BASIN/MANHOLE	98.39(NW)	98.39(SE)	TO OPSD 701.010 & CITY OF OTTAWA STANDARDS – FRAME & COVER TO CITY OF OTTAWA DRAWING No. S25 & S28.1 OR OPSD 401.010
CB/MH–7	99.37	1200mm	PRECAST CONCRETE CATCH–BASIN/MANHOLE	98.32(NW)	98.32(SW)	TO OPSD 701.010 & CITY OF OTTAWA STANDARDS – FRAME & COVER TO CITY OF OTTAWA DRAWING No. S25 & S28.1 OR OPSD 401.010
MH–8	99.72	CDS PMSU2015–4	PRECAST CONCRETE MANHOLE	98.23(NW)	98.23(SE)	TO OPSD 701.010 & CITY OF OTTAWA STANDARDS EXCEPT WITH A DEEP SUMP AS REQUIRED BY CDS

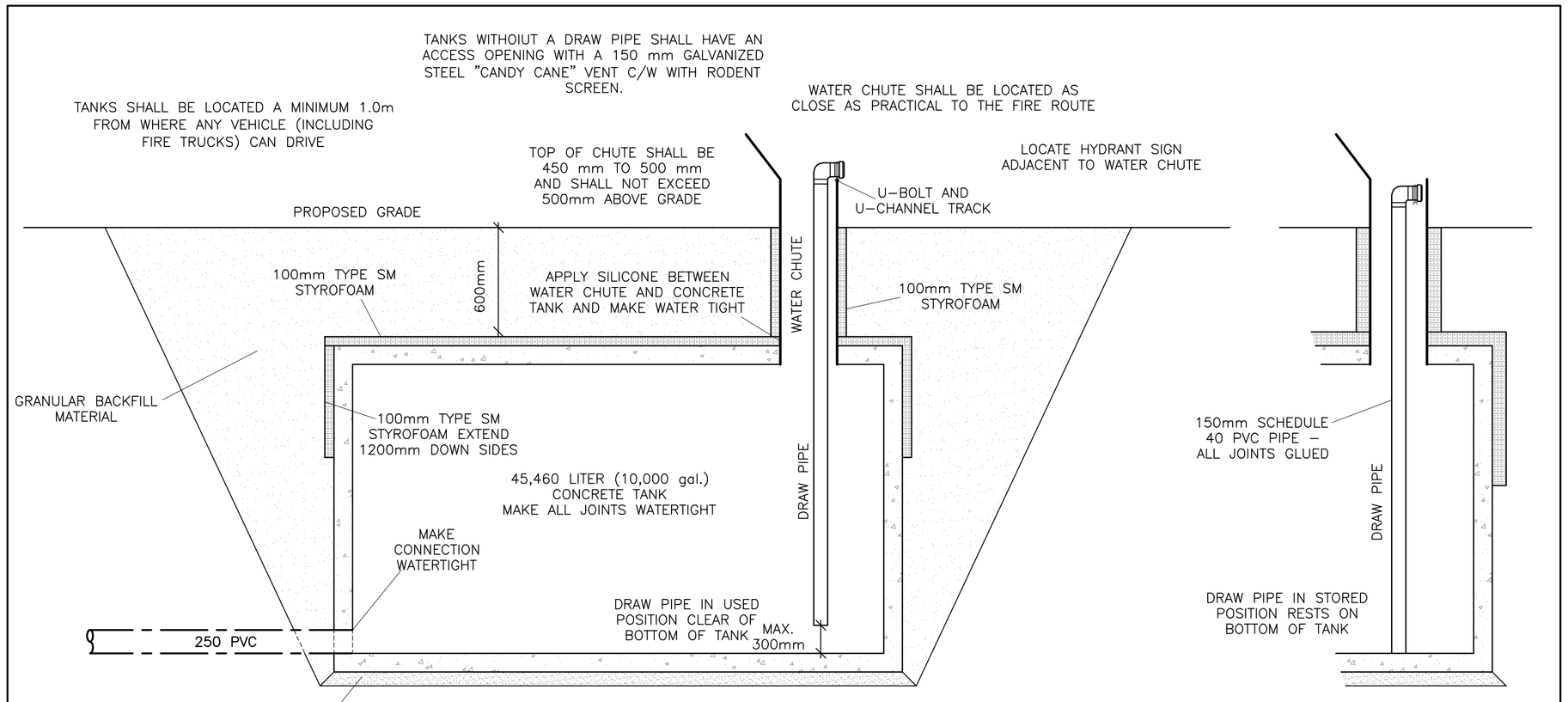

WATER FILL STATION

(WATER SUPPLY FOR FIRE PROTECTION)

AS PER CITY OF OTTAWA DRAWING No. W52

N.T.S.

No.	DATE	REVISION
2	JAN 13–25	ISSUED FOR APPROVAL
1	DEC 18–24	ISSUED FOR COORDINATION

D. B. GRAY ENGINEERING INC.

Stormwater Management - Grading & Drainage - Storm & Sanitary Sewers - Watermains

700 Long Point Circle 613-425-8044

Ottawa, Ontario d.gray@dbgrayengineering.com

Project

PROPOSED 1–STOREY BUILDING 1386–1394 GREELY LANE

GREELY, ONTARIO

Drawing Title

DETAILS & SCHEDULE

Engineer's Seal

LICENSED PROFESSIONAL ENGINEER D.B. GRAY 17016502 JAN 13–25 PROVINCE OF ONTARIO

NOT VALID UNLESS SIGNED & DATED

Drawn	D.B.G.
H. Scale	
V. Scale	
Date	SEP 20–24
Job No.	24015

Drawing No.

C–8 of 9

1. GENERAL

1.1 USE BAR SCALE TO CONFIRM ACTUAL PLOT SCALE. EXISTING AND NEW ELEVATIONS AND INVERTS SHOWN ARE GEODETIC AND ARE IN METERS. ALL PIPE DIMENSIONS ARE NOMINAL AND IN MILLIMETERS UNLESS OTHERWISE NOTED.
1.2 UNLESS OTHERWISE STATED "ENGINEER" REFERS TO D. B. GRAY ENGINEERING INC.
1.3 SITE BOUNDARIES AND EXISTING GRADES AND OTHER FEATURES DERIVED FROM TOPOGRAPHIC SURVEY PREPARED BY FAIRHALL MOFFATT & WOODLAND LIMITED JOB No AD19100 REF. No. 5-4M-351. ELEVATIONS ON THE SURVEY PLAN AND THESE DRAWINGS ARE IN METRES AND ARE GEODETIC AND ARE REFERRED TO GEODETIC DATUM (CGVD28). IT IS THE RESPONSIBILITY OF THE USER OF THE SURVEY PLAN AND THESE DRAWINGS TO VERIFY THAT THE JOB BENCHMARK HAS NOT BEEN ALTERED OR DISTURBED AND THAT ITS RELATIVE ELEVATION AND DESCRIPTION AGREE WITH THE INFORMATION SHOWN ON SURVEY PLAN AND THESE DRAWINGS.
1.4 REFER TO ARCHITECTURAL AND LANDSCAPE SITE PLANS FOR EXACT LOCATIONS OF BUILDINGS, PAVED AREAS, SIDEWALKS, PLANTERS ETC. LAYOUT SHALL BE COMPLETED BY THE CONTRACTOR AND SHALL BE REVIEWED BY THE OWNER'S REPRESENTATIVE PRIOR TO CONSTRUCTION. AT ALL TIMES THE CONTRACTOR IS RESPONSIBLE FOR THE ACCURACY OF THE LAYOUT INCLUDING LINES AND GRADES.
1.5 REFER TO TREE CONSERVATION REPORT FOR TREE PROTECTION REQUIREMENTS.
1.6 REFERENCE THE LATEST REVISION AND ALL ADDENDUMS OF THE GEOTECHNICAL INVESTIGATION BY CAMBIUM INC REF: 17281-001. CONSTRUCTION SHALL CONFORM TO THE GEOTECHNICAL INVESTIGATION TO THE SATISFACTION OF THE GEOTECHNICAL ENGINEER INCLUDING: SUB-GRADE PREPARATION AND CONSTRUCTION OF THE PAVEMENT STRUCTURE; EXCAVATION AND BACKFILLING; SERVICE TRENCH EXCAVATION AND PIPE BEDDING AND BACKFILL; AND THE COMPACTION OF MATERIALS.
1.7 DRAWINGS ARE TO BE READ IN CONJUNCTION WITH SITE SERVICING & STORMWATER MANAGEMENT REPORT No. 24015 PREPARED BY D. B. GRAY ENGINEERING INC.
1.8 CONSTRUCTION SHALL BE PERFORMED IN ACCORDANCE WITH THE OCCUPATIONAL HEALTH AND SAFETY ACT AND CURRENT CITY OF OTTAWA STANDARD SPECIFICATIONS AND DRAWINGS.
1.9 ONTARIO PROVINCIAL STANDARD SPECIFICATIONS AND DRAWINGS SHALL APPLY WHERE NO CITY OF OTTAWA STANDARD SPECIFICATIONS OR DRAWINGS ARE AVAILABLE.
1.10 REINSTATE AREAS DISTURBED BY CONSTRUCTION TO PRE-CONSTRUCTION CONDITIONS.
1.11 REINSTATE CITY PROPERTIES TO CITY STANDARDS AND TO CITY OF OTTAWA'S SATISFACTION.

2. EROSION AND SEDIMENT CONTROL PLAN

2.1 THE CONTRACTOR SHALL IMPLEMENT BEST MANAGEMENT PRACTICES TO PROVIDE PROTECTION OF THE AREA DRAINAGE SYSTEM AND THE RECEIVING WATER COURSE DURING CONSTRUCTION ACTIVITIES. THIS INCLUDES LIMITING THE AMOUNT OF EXPOSED SOIL, USING SEDIMENT CAPTURE FILTER SOCK INSERTS IN CATCH BASINS AND MANHOLES AND INSTALLING SILT FENCES AND OTHER EFFECTIVE SEDIMENT TRAPS. DO NOT REMOVE UNTIL CONSTRUCTION IS COMPLETE.
2.2 AT ANY MANHOLES OR CATCH BASINS THAT WILL RECEIVE DISCHARGE FROM DE-WATERING OPERATIONS AND ALL NEW CATCH BASINS AS THEY ARE INSTALLED: INSTALL SEDIMENT CAPTURE FILTER SOCK INSERTS (TERRAFIX GEOSYNTHETICS INC SILTSACK OR APPROVED EQUAL). INSPECT AT THE END OF EACH DAY AND AFTER EACH RAINFALL. REMOVE SEDIMENT AS RECOMMENDED BY THE MANUFACTURER. IMMEDIATELY REPAIR OR REPLACE ANY DAMAGED FILTER SOCK INSERTS. DO NOT REMOVE UNTIL CONSTRUCTION IS COMPLETE.
2.3 INSTALL A SILT FENCE BARRIER AROUND STOCKPILED SEDIMENT OR SOIL. PRIOR TO COMMENCEMENT OF CONSTRUCTION INSTALL A SILT FENCE BARRIER AS SHOWN ON PLANS. INSPECT ALL SILT FENCES AT THE END OF EACH DAY AND AFTER EACH RAINFALL. REMOVE SEDIMENT DEPOSITS WHEN THE LEVEL OF DEPOSITS REACHES ONE THIRD THE HEIGHT OF THE FENCE. IMMEDIATELY REPAIR OR REPLACE ANY DAMAGED SECTIONS OF FENCE. DO NOT REMOVE ANY SILT FENCES IN ANY PHASE UNTIL CONSTRUCTION IS COMPLETE.
2.4 ANY MATERIAL DEPOSITED ON A PUBLIC ROAD SHALL BE REMOVED BY SWEEPING AND SHOVELING OR VACUUMING AND DISPOSING SEDIMENT IN A CONTROLLED AREA. DO NOT SWEEP OR HOSE MATERIAL INTO ANY STORMWATER CONVEYANCE SYSTEM.
2.5 CONSTRUCTION IS CONSIDERED COMPLETE WHEN THE FOLLOWING CONDITIONS HAVE BEEN MET:
A. ALL STRUCTURES HAVE BEEN BUILT.
B. ALL HARD SURFACES HAVE BEEN CONSTRUCTED.
C. ALL PROPOSED GRASSED AREAS ARE EITHER SODDED OR HAVE A FULL COVERAGE OF WELL ESTABLISHED TURF AND HAVE HAD A MINIMUM OF ONE FULL GROWING SEASON (MAY 15TH TO SEPTEMBER 15TH).
D. THERE ARE NO AREAS OF EXPOSED EARTH.
E. ALL STOCKPILED MATERIALS HAVE BEEN REMOVED.
2.6 REMOVE EROSION AND SEDIMENT CONTROL MEASURES WHEN CONSTRUCTION IS COMPLETE.

3. GRADING & DRAINAGE

3.1 NEW GRADES TO MATCH EXISTING AT PROPERTY LINE. NO EXCESS DRAINAGE WILL BE DIRECTED TOWARDS THE ADJACENT PROPERTIES DURING OR AFTER CONSTRUCTION. THERE WILL BE NO ALTERATION TO EXISTING GRADE AND DRAINAGE PATTERNS ON PROPERTY LINE.
3.2 ALL AREAS SHALL BE GRADED TO ENSURE ADEQUATE DRAINAGE AWAY FROM BUILDINGS TO CATCH BASINS, SWALES, DITCHES AND OTHER APPROVED DISPOSAL AREAS. GRADING SHALL BE GRADUAL BETWEEN FINISHED SPOT ELEVATIONS SHOWN ON DRAWINGS TO PREVENT PONDING (OTHER THAN PONDING REQUIRED FOR STORMWATER MANAGEMENT).
3.3 WHETHER RESULT OF POOR WORKMANSHIP OR DAMAGE: DEFECTIVE GRADING SHALL BE CORRECTED.
3.4 CONCRETE CURBS SHALL BE CONSTRUCTED TO CITY OF OTTAWA DRAWING NO. SC1.1. CONCRETE SIDEWALK SHALL BE CONSTRUCTED TO CITY OF OTTAWA DRAWING NO. SC4. CONCRETE CURBS WITH CONCRETE SIDEWALK SHALL BE CONSTRUCTED TO CITY OF OTTAWA DRAWING NO. SC1.4. MONOLITHIC CONCRETE CURB AND SIDEWALK SHALL BE CONSTRUCTED TO CITY OF OTTAWA DRAWING NO. SC2. ACCESSIBLE DEPRESSED CURB SHALL BE C/W TACTILE WALKING SURFACE INDICATOR (TWSI) ALL IN ACCORDANCE WITH CITY OF OTTAWA ACCESSIBILITY DESIGN STANDARDS. TWSI SHALL BE INSTALLED AS PER CITY OF OTTAWA DRAWING No. SC7.3. DEPRESSED CONCRETE CURBS FOR PEDESTRIAN TRAFFIC SHALL BE 0 mm. CONCRETE CURBS SHALL BE TO CITY OTTAWA SPECIFICATION SECTION F-3531. CONCRETE SIDEWALKS SHALL BE TO CITY OF OTTAWA SPECIFICATION SECTION F-3511. CONCRETE SHALL BE CSA 32 MPa, CLASS C-2, THE AIR ENTRAINMENT SHALL BE 5% TO 8% PRIOR TO PLACEMENT AND THE SLUMP SHALL BE LESS THAN 40 mm ± 20 mm FOR EXTRUDED CONCRETE CURBS AND LESS THAN 90 mm FOR PLACED CONCRETE CURBS AND SIDEWALK.
3.5 WHETHER RESULT OF POOR WORKMANSHIP, USE OF DEFECTIVE PRODUCTS OR DAMAGE: DEFECTIVE PORTIONS OF CURBS, SIDEWALK AND ASPHALT SHALL BE CORRECTED OR REMOVED AND REPLACED.
3.6 ALL PROPOSED RETAINING WALLS SHALL BE SETBACK A MINIMUM 0.15m FROM PROPERTY LINE INCLUDING THE WALL FOUNDATION AND FOOTINGS. ALL PROPOSED RETAINING WALLS GREATER THAN 1.0m IN HEIGHT SHALL BE DESIGNED BY A PROFESSIONAL ENGINEER REGISTERED IN ONTARIO. RETAINING WALLS OVER 0.6 m IN HEIGHT MAY REQUIRE A GUARD RAIL (SEE ARCHITECTURAL).
3.7 CULVERTS SHALL BE HDPE OR CORRUGATED STEEL ROUND AND 500mm IN DIAMETER. HDPE CULVERTS TO CITY OF OTTAWA STANDARDS AND SPECIFICATIONS AND TO OPSS 1840 AND CSA B182.8 OR 182.6. MINIMUM 320 kPa STIFFNESS AT 5% DEFLECTION; JOINTS SHALL BE SOIL-TIGHT OR BETTER (BOSS 2000 OR APPROVED EQUAL). CORRUGATED STEEL CULVERTS SHALL BE 2.0 mm THICK ALUMINIZED TYPE 2 TO CITY OF OTTAWA STANDARDS AND SPECIFICATIONS AND TO OPSS 1801 AND OPSD 805.010 AND CSA G401. ALL CULVERTS WITHIN PAVED AREAS SHALL HAVE 5:1 FROST TAPERS FROM THE INVERT OF THE CULVERT TO THE PAVEMENT SUB-GRADE.
3.8 RIP RAP: PLACE RIP-RAP 300mm THICK AS INDICATED ON PLANS AS PER OPSS 511 AND OPSD 810.010 AND/OR 810.020. USE QUARRIED STONE 200MM TO 300MM IN DIAMETER. AREA TO BE RIP RAPPED SHALL BE EXCAVATED AND FINE GRADED TO A UNIFORM AND EVEN SURFACE TO PROVIDE ADEQUATE FOUNDATION. FILL AND THOROUGHLY COMPACT DEPRESSIONS. WHERE RIP RAP IS TO BE PLACED ON SLOPES, EXCAVATE TRENCH AT TOE OF SLOPE. PLACE GEOTEXTILE FABRIC ON PREPARED SURFACE. GEOTEXTILE FABRIC SHALL EXTEND A MINIMUM 300mm BEYOND THE EXTENT OF THE RIP RAP IN ALL DIRECTIONS. PLACE RIP RAP ON FABRIC CAREFULLY, TO AVOID PUNCTURING FABRIC. PLACE RIP RAP IN A SET AND STABLE MANNER. ROCK SHALL BE PLACED, STARTING AT THE LOWER END OF THE SLOPE. THE LARGEST ROCKS OBTAINABLE SHALL BE USED AND PLACED IN THE BOTTOM COURSES AND FOR USE AS HEADERS THROUGH SUBSEQUENT COURSES. THEY SHALL BE LAID CLOSELY AND SUCH THAT THEY WILL PROVIDE A REASONABLE SEMBLANCE OF COURSES. FILL VOIDS WITH ROCK SPALLS OR COBBLES. FINNISH SURFACE EVEN, FREE OF LARGE OPENINGS AND NEAT IN APPEARANCE.
3.9 GEOTEXTILE FABRIC: TO OPSS 1860. WOVEN SYNTHETIC FIBRE FABRIC SHALL BE USED IN SILT FENCE BARRIER (GEOSYNTHETIC HD105 OR APPROVED EQUAL). NON-WOVEN SYNTHETIC FIBRE FABRIC 1.75mm THICK, 200g/sq.m. SHALL BE USED FOR MATERIAL SEPARATION. SUBDRAIN / DRY WELL / INFILTRATION TRENCH APPLICATIONS: GEOSYNTHETIC TERRAFIX 360R OR APPROVED EQUAL. RIP RAP APPLICATIONS: GEOSYNTHETIC TERRAFIX 420R OR APPROVED EQUAL. BIAXIAL GEOGRID FABRIC: GEOSYNTHETIC TERRAFIX TBX2500 OR APPROVED EQUAL. PRIOR TO INSTALLATION SUBMIT SHOP DRAWING TO ENGINEER FOR APPROVAL. GEOTEXTILE FABRIC SHALL BE FREE OF TEARS AND RESISTANT TO DETERIORATION BY ULTRA VIOLET AND HEAT EXPOSURE. PLACE GEOTEXTILE MATERIAL BY UNROLLING ONTO GRADED SURFACE, SMOOTH AND FREE OF TENSION STRESS, FOLDS, WRINKLES AND CREASES. PLACE GEOTEXTILE MATERIAL ON SLOPING SURFACES IN ONE CONTINUOUS LENGTH FROM TOE OF SLOPE TO UPPER EXTENT OF GEOTEXTILE. OVERLAP EACH SUCCESSIVE STRIP OF GEOTEXTILE 600mm OVER PREVIOUSLY LAID STRIP IN DIRECTION OF FLOW. ALTERNATIVELY THE FABRIC MAY BE LAPPED A MINIMUM OF 300mm AND PINNED TOGETHER. PROTECT INSTALLED GEOTEXTILE MATERIAL FROM DISPLACEMENT, DAMAGE OR DETERIORATION BEFORE, DURING AND AFTER PLACEMENT OF MATERIAL LAYERS AFTER INSTALLATION, COVER WITH OVERLYING LAYER WITHIN 4 HOURS OF PLACEMENT. DURING DELIVERY AND STORAGE, PROTECT GEOTEXTILES FROM DIRECT SUNLIGHT, ULTRAVIOLET RAYS, EXCESSIVE HEAT, MUD, DIRT, DUST, DEBRIS AND RODENTS. VEHICULAR TRAFFIC NOT PERMITTED DIRECTLY ON GEOTEXTILE. AVOID PUNCTURING GEOTEXTILE. REPLACE DAMAGED OR DETERIORATED GEOTEXTILE.

4. SITE SERVICES

4.1 THE EXISTING WELLS SHALL BE DECOMMISSIONED BY A LICENSED WELL CONTRACTOR IN ACCORDANCE WITH ONTARIO REGULATION 903. UPON COMPLETION PREPARE A WELL RECORD FOR THE ABANDONED WELL. A COPY OF THE WELL RECORD SHALL BE DELIVERED TO THE OWNER OF THE LAND.
4.2 THE NEW WELL SHALL CONSTRUCTED BY A LICENSED WELL CONTRACTOR. GRADES AROUND THE WELL SHALL BE AT AN ELEVATION HIGHER THAN THE IMMEDIATELY SURROUNDING AREA AND THE AREA AROUND THE WELL SHALL BE GRADED SUCH THAT SURFACE DRAINAGE WILL NOT POND IN THE VICINITY OF THE WELL. THE WATERTIGHT STEEL WELL CASING SHALL EXTEND A MINIMUM 40 cm ABOVE THE HIGHEST POINT ON THE GROUND SURFACE WITHIN 3 m RADIALLY FROM THE OUTSIDE OF THE CASING. ALL CONNECTIONS (WATERLINE AND ELECTRICAL) THROUGH THE WELL CASING SHALL BE WATERTIGHT.
4.3 PROVIDE A MINIMUM 2.4 m COVER OVER WELL WATER LINE. WHERE THE MINIMUM COVER IS NOT POSSIBLE INSULATE AS PER DETAIL. WHERE LESS THAN 2.4 m CLEARANCE FROM AN OPEN STRUCTURE (EG. MANHOLES, CATCH BASINS & WINDOW WELLS) PLACE INSULATION AROUND WELL WATER LINE AS PER CITY OF OTTAWA DWG. No. W23.
4.4 ALL SEWER MATERIALS AND CONSTRUCTION METHODS TO CITY OF OTTAWA STANDARDS AND ONTARIO PROVINCIAL STANDARDS SPECIFICATIONS (OPSS & OPSD). SEWER MATERIAL SHALL BE PVC SDR-35 (SDR-28 FOR DIAMETERS 150mm OR LESS) AND SHALL CONFORM TO CSA B182.2 AND SHALL HAVE BELL AND SPIGOT JOINTS WITH RUBBER GASKETS.
4.5 SEWERS SHALL HAVE A MINIMUM 1.8m OF COVER. WHERE THE MINIMUM COVER IS NOT POSSIBLE INSULATE AS INDICATED AND AS PER DETAIL.
4.6 MANHOLES & CATCH BASINS:
A. PRECAST MANHOLE UNITS: TO OPSS 1351 AND OPSD 701.010 WITH BASE SLAB OR MONOLITHIC BASE. TOP SECTIONS ECCENTRIC CONE OR FLAT LAB TOP TYPE WITH OPENING OFFSET FOR VERTICAL LADDER INSTALLATION.
B. MANHOLE STEPS: TO OPSD 405.01
C. ADJUSTING RINGS: TO ASTM C 478M.
D. ALUMINUM SURFACES IN CONTACT WITH OR CAST INTO CONCRETE SHALL HAVE POLYETHYLENE ANCHOR INSULATING SLEEVES.
E. PRECAST CATCH BASIN SECTIONS: TO OPSS 1351.
F. JOINTS: SHALL BE MADE WATERTIGHT USING BUTYL BASED, FLEXIBLE WATERSTOP/JOINT SEALANT MATERIAL.
G. STORM SEWERS: MANHOLES SHALL HAVE A 300mm SUMP AND CATCH BASINS AND DITCH INLETS SHALL HAVE A 600mm SUMP.
H. FRAMES, GRATES AND COVERS TO CITY OF OTTAWA DRAWINGS OR OPSD (AS PER CATCH BASIN & MANHOLE SCHEDULE). GRATES AND COVERS TO BEAR EVENLY ON FRAMES.
I. GRANULAR BEDDING AND BACKFILL: OPSS GRANULAR A. RE-CYLCLED GRANULAR MATERIALS ARE NOT PERMITTED.
G. PRIOR TO INSTALLATION SUBMIT SHOP DRAWINGS TO THE ENGINEER FOR REVIEW.
4.7 AS INDICATED ON PLANS: AT ALL CATCH BASINS AND CATCH BASIN MANHOLES PROVIDE MINIMUM 3m LONG, 150mm DIAMETER, PERFORATED SUB-DRAINS AT THE SUB-GRADE LEVEL; HDPE C/W FILTER FABRIC SOCK & END PLUG (BOSS 1000 OR APPROVED EQUAL).
4.8 WATER FILL STATION / WATER SUPPLY FOR FIRE FIGHTING STORAGE TANKS, CHUTE WITH FIRE FITTINGS AND DRAW PIPES AS PER CITY STANDARDS AND CITY DRAWING Nos. W51 & W52 SUPPLY AND INSTALL A LOW WATER LEVEL FLOAT ALARM (AUDIBLE AND VISUAL) THAT IS ACTIVATED WHEN THE WATER LEVEL DROPS MORE THAN 300 mm BELOW THE TOP OF THE TANK. CONNECT 45,460 LITRE (10,000 GAL) CONCRETE TANKS WITH 250 mm DIAMETER PVC DR25 PIPE (IPEX BLUE BRUTE OR APPROVED EQUAL). CORE DRILL OPENINGS IN TANKS AND MAKE JOINTS WATERTIGHT BETWEEN TANK AND PIPE. AS INDICATED ON PLANS: TANKS SHALL EITHER HAVE A CHUTE AND A DRAW PIPE OR SHALL HAVE AN ACCESS OPENING WITH A 150 mm GALVANIZED STEEL "CANDY CANE" VENT C/W WITH RODENT SCREEN. ANCHOR TANKS TO PREVENT UPLIFT FROM HYDROSTATIC PRESSURES USING A METHOD APPROVED BY TANK MANUFACTURER. HANDLE AND INSTALL FIRE STORAGE TANKS USING METHODS APPROVED BY THE TANK MANUFACTURER AND AS FOLLOWS (IN THE EVENT OF A CONFLICT, THE METHOD APPROVED BY THE MANUFACTURER SHALL BE USED):
A. PLACE TANK PLUMB AND TRUE TO ALIGNMENT AND GRADE.
B. SET TANK ON MINIMUM 300 mm OF OPSS GRANULAR A COMPACTED TO 100% CORRECTED MAXIMUM DRY DENSITY OR AS DIRECTED BY MANUFACTURER. RE-CYLCLED GRANULAR MATERIALS ARE NOT PERMITTED.
C. PLACE GRANULAR BACKFILL MATERIALS IN A UNIFORM LAYERS TO COMPACTED THICKNESS OF 150 mm, COMPACT TO 95% CORRECTED MAXIMUM DRY DENSITY.
D. PLACE LAYERS SIMULTANEOUSLY ON BOTH SIDES OF INSTALLED WORK TO EQUALIZE LOADING.
D. MAKE ALL JOINTS WATERTIGHT.
E. PERFORM FIELD LEAKAGE TESTS ON ALL TANKS AND CONNECTING PIPES COMPLETED IN ACCORDANCE WITH OPSS 407 (MAINTENANCE HOLES & VALVE CHAMBERS) & OPSS 410 (SEWERS). REPAIR AND RETEST AS REQUIRED. REPAIR VISIBLE LEAKS REGARDLESS OF TEST RESULTS.
4.9 THE EXISTING SEPTIC SYSTEM SHALL BE DE-COMMISSIONED TO THE SATISFACTION OF THE DIRECTOR OF THE OTTAWA SEPTIC SYSTEM OFFICE (OSSO). SUBMIT THE SEPTIC SYSTEM DE-COMMISSIONING FORM TO THE OSSO. THE SEPTIC TANK SHALL BE PUMPED OUT AND EMPTIED BY A REGISTERED SEWAGE HAULER PRIOR TO DECOMMISSIONING. THE SEPTIC TANK AND PUMP CHMABER SHALL BE REMOVED FROM THE SITE AND DISPOSED OF AT A LICENSED FACILITY. ELECTRICAL DEVICES CONTAINING MERCURY SHALL BE REMOVED AND DISPOSED OF IN A LICENSED HAZARDOUS WASTE DISPOSAL FACILITY. THE DISTRIBUTION PIPES IM THE LEACHING BED SHALL BE DISPOSED AT A LICENSED WASTE DISPOSAL SITE. EXCAVATED CONTAMINATED SOIL SHALL BE SPREAD OR STOCKPILED ON SITE TO THE SATISFACTION OF THE OSSO OR DISPOSED OF IN A LICENSED WASTE DISPOSAL SITE. REQUEST AN INSPECTION BY THE OSSO. DELIVER THE APPROVED SEPTIC SYSTEM DECOMMISSIONING FORM TO THE THE OWNER OF THE LAND.
4.10 CLASS 4 SEWAGE SYSTEM:
THE PROPOSED CLASS 4 SEWAGE SYSTEM SHALL CONSIST OF A 5,400 L (MINIMUM) SEPTIC TANK; ECOFLO BIOFILTER (STB-650BR PUMPED UNIT); AND TYPE "A' DISPERSAL BED AND SHALL CONFORM TO THE REQUIREMENTS OF THE ONTARIO BUILDING CODE (OBC). THE SEWAGE SYSTEM SHALL BE CONSTRUCTED BY A REGISTERED SEWAGE SYSTEM INSTALLER. THE ECOFLO BIOFILTER SYSTEM SHALL BE INSTALLED, MAINTAINED AND SERVICED BY MANUFACTURER TRAINED AND AUTHORIZED AGENTS OR EMPLOYEES. THE SEPTIC TANK SHALL CONFORM TO THE REQUIREMENTS OF CSA B66 AND THE OBC AND SHALL BE FITTED WITH AN EFFLUENT FILTER THAT SCREENS OUT PARTICLES LARGER THAN 3.2 mm AND AS RECOMMENDED BY THE MANUFACTURER. HANDLE AND INSTALL SEPTIC TANK USING METHODS APPROVED BY THE TANK MANUFACTURER AND AS FOLLOWS (IN THE EVENT OF A CONFLICT, THE METHOD APPROVED BY THE MANUFACTURER SHALL BE USED):
A. PLACE TANK PLUMB AND TRUE TO ALIGNMENT AND GRADE.
B. TOP OF TANK SHALL BE A MINIMUM 600mm AND A MAXIMUM 1200 mm BELOW FINISHED GRADE OR AS PER MANUFACTURER'S RECOMMENDATIONS. INSTALL MANUFACTURER SUPPLIED PRE-CAST CONCRETE ACCESS RISERS TO EXTEND ACCESS AS PER MANUFACTURER'S RECOMMENDATIONS.
C. SET TANK ON MINIMUM 150 mm OF GRANULAR A COMPACTED TO 100% CORRECTED MAXIMUM DRY DENSITY OR AS DIRECTED BY MANUFACTURER.
D. PLACE GRANULAR BACKFILL MATERIALS IN A UNIFORM LAYERS TO COMPACTED THICKNESS OF 150MM, COMPACT TO 95% CORRECTED MAXIMUM DRY DENSITY. BUILD A 3H:1V FROST TAPER WITHIN THE UPPER 1.2M.
E. PLACE LAYERS SIMULTANEOUSLY ON BOTH SIDES OF INSTALLED WORK TO EQUALIZE LOADING.
F. ANCHOR TANK TO PREVENT UPLIFT FROM HYDROSTATIC PRESSURES USING A METHOD APPROVED BY TANK MANUFACTURER.
G. MAKE JOINTS WATERTIGHT BETWEEN TANK AND PIPE.

5. CONSTRUCTION:

5.1 PRIOR TO COMMENCING WORK:
A. OBTAIN AND PAY FOR ALL NECESSARY PERMITS AND APPROVALS FROM THE AUTHORITIES.
B. SIZE, DEPTH AND LOCATION OF EXISTING INFRASTRUCTURE (SERVICES, UTILITIES, AND STRUCTURES) AND ARE NOT NECESSARILY SHOWN ON DRAWINGS AND THOSE INDICATED ON THE DRAWINGS ARE DERIVED FROM AVAILABLE INFORMATION AND ARE FOR GUIDANCE ONLY AND MUST BE CONFIRMED ON SITE BEFORE COMMENCING ANY WORK. COMPLETENESS AND ACCURACY ARE NOT GUARANTEED. NOTIFY ALL APPLICABLE OWNERS, UTILITY COMPANIES AND AUTHORITIES HAVING JURISDICTION OF PROPOSED WORK AND LOCATE AND CLEARLY IDENTIFY ALL EXISTING INFRASTRUCTURE ON THE SITE AND ADJACENT TO THE SITE. UNDERGROUND LOCATES (INCLUDING BUT NOT LIMITED TO ONTARIO ONE CALL: 1-800-400-2255) SHALL BE CONDUCTED PRIOR TO THE COMMENCEMENT OF ANY EXCAVATION. CONFIRM LOCATIONS OF BURIED INFRASTRUCTURE BY CAREFULLY EXCAVATING TEST PITS AND REPORT ANY DIFFERENCES TO THE ENGINEER. ANY ISSUES ARISING FROM FAILURE OF CONTRACTOR TO DETERMINE THE SIZE, DEPTH AND LOCATION ALL EXISTING INFRASTRUCTURE WILL BE AT THE CONTRACTOR'S EXPENSE.
C. EXISTING GRADE ELEVATIONS SHOWN ON DRAWINGS ARE DERIVED FROM AVAILABLE INFORMATION AND ARE FOR GUIDANCE ONLY AND MUST BE CONFIRMED ON SITE BEFORE COMMENCING CONSTRUCTION. COMPLETENESS AND ACCURACY ARE NOT GUARANTEED. REPORT ANY DIFFERENCES TO ENGINEER.
D. COORDINATE AND SCHEDULE WORK WITH THE OWNER, AUTHORITIES AND OTHER TRADES.
E. SCHEDULE WORK TO PROVIDE THE MINIMUM DISRUPTION TO SERVICES.
F. INSTALL CONSTRUCTION FENCING AROUND THE AREA OF WORK. DO NOT REMOVE FENCING UNTIL WORK IS COMPLETE.
5.2 MAINTAIN AND PROTECT FROM DAMAGE, SERVICES, UTILITIES AND STRUCTURES ENCOUNTERED.
5.3 PROTECT EXISTING BUILDINGS, TREES AND OTHER PLANTS, LAWNS, FENCING, SERVICE POLES, WIRES, PAVEMENT, SURVEY BENCH MARKS AND MONUMENTS AND OTHER SURFACE FEATURES FROM DAMAGE WHILE WORK IS IN PROGRESS. DO NOT DISTURB SOIL WITHIN BRANCH SPREAD OF TREES OR SHRUBS THAT ARE TO REMAIN.
5.4 PROVIDE TRAFFIC CONTROL AND SAFETY MEASURES AS REQUIRED BY THE AUTHORITIES, INCLUDING ANY NECESSARY PERSONNEL AND THE SUPPLY, INSTALLATION, REMOVAL AND REPLACEMENT OF ALL NECESSARY SIGNAGE AND BARRIERS. IF APPLICABLE, PROVIDE TRAFFIC MANAGEMENT PLAN AS PER CITY OF OTTAWA REQUIREMENTS.
5.5 FENCE OFF ALL OPEN EXCAVATIONS AT THE END OF EACH WORK DAY. FENCES SHALL BE INSTALLED AND MAINTAINED A GOOD AND EFFECTIVE CONDITION.
5.6 REMOVE OBSTRUCTIONS, ICE AND SNOW, FROM SURFACES TO BE EXCAVATED.
5.7 CUT PAVEMENT AND / OR SIDEWALK NEATLY ALONG LIMITS OF PROPOSED EXCAVATION IN ORDER THAT SURFACE MAY BREAK EVENLY AND CLEANLY.
5.8 COORDINATE AND PAY FOR GEOTECHNICAL INSPECTIONS AND COMPACTION TESTS OF SUB-GRADE, PIPE BEDDING AND EACH LAYER OF SURROUND MATERIAL, BACKFILL, SUB-BASE, BASE AND ASPHALT TO THE SATISFACTION OF THE GEOTECHNICAL CONSULTANT AND ENGINEER. SUBMIT GEOTECHNICAL INSPECTIONS AND COMPACTION REPORTS TO ENGINEER FOR REVIEW. A MINIMUM ON ONE SET OF INSPECTIONS AND COMPACTION TESTS SHALL BE COMPLETED ON EACH PIPE SEGMENT GREATER THAN 20 m IN LENGTH. A MINIMUM ONE SET OF INSPECTION AND COMPACTION TESTS SHALL BE COMPLETED FOR EVERY 500 m^2 OF PAVEMENT AREA.
5.9 PRIOR TO COMMENCEMENT OF TOPSOIL STRIPPING REMOVE FROM SITE ALL EXPOSED BOULDERS, DEBRIS AND LIVE AND DEAD PLANT MATERIAL (EXCEPT TREES AND OTHER VEGETATION TO REMAIN). STRIP TOPSOIL FROM THE ENTIRE SITE. DO NOT MIX TOPSOIL WITH SUBSOIL. CUT AND FILL AS NECESSARY TO ACHIEVE THE PROPOSED GRADE ELEVATIONS. DISPOSE OF SURPLUS AND UNSUITABLE EXCAVATED MATERIAL OFF SITE. ANY REQUIRED FILL SHALL BE CLEAN WELL GRADED SAND TO OPSS 1004 UNLESS OTHERWISE DIRECTED BY GEOTECHNICAL ENGINEER. FILL SHALL BE COMPACTED TO NOT LESS THAN 95% OF CORRECTED MAXIMUM DRY DENSITY. FILL MATERIAL AND THE PLACEMENT AND COMPACTION OF THE FILL MATERIAL AS PER THE GEOTECHNICAL REPORT AND TO THE SATISFACTION OF THE GEOTECHNICAL CONSULTANT. PLACE MATERIAL IN UNIFORM LAYERS NOT EXCEEDING 300mm COMPACTED THICKNESS. STOCKPILE GRANULAR AND FILL MATERIALS IN MANNER TO PREVENT SEGREGATION AND PROTECT FROM CONTAMINATION.
5.10 PROTECT WORK AREA AGAINST FLOODING AND DAMAGE DUE TO SURFACE RUN-OFF. DEWATER AS REQUIRED TO KEEP WORK AREA FREE OF WATER. DISCHARGE FROM DEWATERING OPERATIONS SHALL BE DIRECTED TO A SEDIMENT CONTROL MEASURE AND/OR A VEGETATED DISCHARGE AREA. ENSURE THAT THE DISCHARGED WATER DOES NOT CAUSE EROSION OR OTHER DAMAGE TO ADJACENT LANDS.
5.11 EXCAVATION, TRENCHING, & BACKFILL:
A. SHORE AND BRACE EXCAVATIONS, PROTECT SLOPES AND BANKS AND PERFORM ALL WORK IN ACCORDANCE WITH ONTARIO REGULATION 213/91 UNDER THE ONTARIO OCCUPATIONAL HEALTH AND SAFETY ACT AND OTHER AUTHORITIES HAVING JURISDICTION.
B. KEEP EXCAVATIONS FREE OF WATER WHILE WORK IS IN PROGRESS. PROTECT OPEN EXCAVATIONS AGAINST FLOODING AND DAMAGE DUE TO SURFACE RUN-OFF.
C. EXCAVATION SHALL NOT INTERFERE WITH BEARING CAPACITY OF ADJACENT FOUNDATIONS.
D. DO NOT OBSTRUCT FLOW OF SURFACE DRAINAGE OR NATURAL WATERCOURSES.
E. EXCAVATE TO LINES, GRADES, ELEVATIONS AND DIMENSIONS AS INDICATED.
F. EARTH BOTTOMS OF EXCAVATIONS TO BE UNDISTURBED SOIL, LEVEL, FREE FROM LOOSE, SOFT OR ORGANIC MATTER.
G. ALL STRUCTURES WITHIN PAVED AREAS SHALL HAVE 4:1 FROST TAPERS FROM FROST LINE TO SUB-GRADE.
H. CORRECT OVER-EXCAVATION WITH GRANULAR A COMPACTED TO NOT LESS THAN 95% OF CORRECTED MAXIMUM DRY DENSITY.
I. SUB-GRADE AND AREAS TO BE BACKFILLED TO BE FREE FROM DEBRIS, SNOW, ICE, WATER AND FROZEN GROUND.
J. DO NOT USE BACKFILL MATERIAL WHICH IS FROZEN OR CONTAINS ICE, SNOW OR DEBRIS.
K. PIPE BEDDING AND SURROUND MATERIAL SHALL BE OPSS GRANULAR A. RE-CYLCLED GRANULAR MATERIALS ARE NOT PERMITTED.
L. DO NOT USE BEDDING, SURROUND OR BACKFILL MATERIAL WHICH IS FROZEN OR CONTAINS ICE, SNOW OR DEBRIS.
M. PIPE BEDDING SHALL BE 150mm THICK. SHAPE BED TRUE TO GRADE AND TO PROVIDE CONTINUOUS, UNIFORM BEARING SURFACE FOR PIPE.
N. PLACE SURROUND MATERIAL AROUND PIPES TO FULL WIDTH OF TRENCH AND TO 300mm ABOVE PIPES.
O. PLACE BEDDING AND SURROUND MATERIAL IN UNIFORM LAYERS NOT EXCEEDING 150mm COMPACTED THICKNESS. PLACE FILL AND BACKFILL MATERIAL IN UNIFORM LAYERS NOT EXCEEDING 300mm COMPACTED THICKNESS.
P. COMPACT EACH LAYER TO 95% OF CORRECTED DRY DENSITY BEFORE PLACING SUCCEEDING LAYER.
Q. DO NOT BACKFILL AROUND OR OVER CAST-IN-PLACE CONCRETE WITHIN 24 HOURS AFTER PLACING OF CONCRETE.
R. BACKFILL MATERIALS WITHIN 1.8m OF PROPOSED GRADE SHALL MATCH THE MATERIALS EXPOSED ON THE TRENCH WALLS. BACKFILL BELOW 1.8m OF THE PROPOSED CAN CONSIST OF EITHER ACCEPTABLE NATIVE MATERIAL; ROCK; OR IMPORTED GRANULAR MATERIAL CONFORMING TO OPSS GRANULAR B TYPE I OR II. ANY ORGANIC SOILS OR TOPSOIL, IF ENCOUNTERED, SHALL BE REMOVED FROM THE EXCAVATION. IF ROCK IS USED AS BACKFILL IT SHALL BE WELL SHATTERED AND GRADED AND 200mm OR SMALLER IN DIAMETER. TO PREVENT INGRESS OF FINE MATERIAL INTO VOIDS IN THE ROCK FILL, THE UPPER SURFACE OF THE ROCK FILL SHALL BE COVERED WITH 150mm LAYER OF COMPACTED, WELL GRADED CRUSHED STONE PLACED ON GEOTEXTILE FABRIC.
5.12 PIPES:
A. HANDLE PIPE USING METHODS APPROVED BY MANUFACTURER.
B. LAY, CUT AND JOIN PIPES IN ACCORDANCE WITH MANUFACTURER'S RECOMMENDATIONS.
C. USE ONLY FITTINGS AS RECOMMENDED BY PIPE MANUFACTURER.
D. LAY PIPES ON PREPARED BED, TRUE TO LINE AND GRADE AND ENSURE BARREL OF EACH PIPE IS IN CONTACT WITH SHAPED BED THROUGHOUT ITS FULL LENGTH, FREE OF SAGS OR HIGH POINTS.
E. DO NOT EXCEED MAXIMUM JOINT DEFLECTION RECOMMENDED BY PIPE MANUFACTURER.
F. WHENEVER WORK IS SUSPENDED, INSTALL REMOVABLE WATERTIGHT BULKHEAD AT OPEN END OF LAST PIPE LAID TO PREVENT ENTRY OF FOREIGN MATERIALS.
G. WHEN STOPPAGE OF WORK OCCURS, BLOCK PIPES TO PREVENT CREEP DURING DOWN TIME. MAKE WATERTIGHT CONNECTIONS TO MANHOLES.
H. JOINTS SHALL BE STRUCTURALLY SOUND AND WATERTIGHT.
I. REPAIR OR REPLACE PIPE, PIPE JOINT OR BEDDING FOUND DEFECTIVE.
5.13 SEWERS:
A. CONSTRUCT TRENCHES AS PER CITY DWG S6 & S7.
B. RIGID STRUCTURES, INSTALL PIPE JOINTS NOT MORE THAN 1.2m FROM SIDE OF STRUCTURE.
C. MAINTAIN EXISTING SEWAGE FLOWS DURING CONSTRUCTION.
D. CONDUCT TWO CCTV INSPECTIONS OF SEWERS. FIRST INSPECTION AFTER COMPLETION OF CONSTRUCTION. SECOND INSPECTION IMMEDIATELY PRIOR TO END OF WARRANTY PERIOD. A PAN AND TILT CAMERA SHALL BE USED. REPAIR SEWER LINE AS REQUIRED. SUBMIT REPORTS AND DVDS TO ENGINEER.
5.14 MANHOLES & CATCH BASINS:
A. JOINTS: SHALL BE MADE WATERTIGHT.
B. SET PRECAST CONCRETE BASE ON 150mm MINIMUM OF GRANULAR BEDDING COMPACTED TO 100% CORRECTED MAXIMUM DRY DENSITY.
C. MAKE EACH JOINT WATERTIGHT WITH RUBBER RING GASKETS.
D. PLACE GRANULAR BACKFILL MATERIALS IN A UNIFORM LAYERS TO COMPACTED THICKNESS OF 150mm, COMPACT TO 95% CORRECTED MAXIMUM DRY DENSITY.
E. PLACE FRAME AND COVER ON TOP SECTION TO ELEVATION AS INDICATED. IF ADJUSTMENT REQUIRED USE CONCRETE RINGS TO A MAXIMUM OF 300mm.
F. CLEAN UNITS OF DEBRIS, FOREIGN AND SURPLUS MATERIALS. REMOVE FINS AND SHARP PROJECTIONS. PREVENT DEBRIS FROM ENTERING SYSTEM.
5.15 MAINTAIN RECORD DRAWINGS AND ACCURATELY RECORD DEVIATIONS FROM THE ORIGINAL CONTRACT DOCUMENTS CAUSED BY SITE CONDITIONS AND CHANGES MADE BY CHANGE ORDER OR ADDITIONAL INSTRUCTIONS. UPDATE DAILY AND MAKE AVAILABLE ON-SITE FOR REVIEW THROUGHOUT THE CONSTRUCTION PERIOD. RECORD DRAWINGS SHALL INCLUDE BUT NOT NECESSARILY LIMITED TO CHANGES OF DIMENSION AND DETAIL; CHANGES TO GRADE ELEVATIONS; AND HORIZONTAL AND VERTICAL LOCATIONS OF UNDERGROUND SERVICES, UTILITIES AND APPURTENANCES REFERENCED TO A PERMANENT SURFACE STRUCTURE. SUBMIT A RECORD DRAWING OF "AS-BUILT" GRADE ELEVATIONS, PREPARED BY A SURVEYOR, TO THE ENGINEER AT THE END OF CONSTRUCTION.
5.16 REINSTATE ALL AREAS DISTURBED BY CONSTRUCTION. REINSTATE PAVEMENTS, CURBS AND SIDEWALKS, TO THICKNESS, STRUCTURE AND ELEVATION WHICH EXISTED BEFORE CONSTRUCTION. REINSTATE LANDSCAPED AREAS TO THE CONDITION AND ELEVATION WHICH EXISTED BEFORE CONSTRUCTION.
5.17 CLEAN AND REINSTATE AREAS AFFECTED BY THE WORK.

6. PAVEMENT

6.1 PAVEMENT STRUCTURE:
40mm HL-3 OR SUPERPAVE 12.5 ASPHALTIC CONCRETE
60mm HL-8 OR SUPERPAVE 19.0 ASPHALTIC CONCRETE
150mm OPSS GRANULAR A BASE
400mm OPSS GRANULAR B TYPE II SUB-BASE
6.2 RE-CYLCLED GRANULAR MATERIALS ARE NOT PERMITTED.
ASPHALTIC CONCRETE SHALL BE PERFORMANCE GRADE PG58-34.
HOT MIX ASPHALT MATERIALS SHALL BE ACCORDING TO OPSS 1150 OR 1151.
6.3 ALL EXISTING ASPHALT TO BE REMOVED SHALL BE HAULED TO A FACILITY APPROVED FOR ACCEPTING SUCH MATERIALS. REMOVE ALL MATERIALS TO THE SUB-GRADE LEVEL. REMOVE ORGANIC OR UNSUITABLE MATERIAL FROM SUB-GRADE WHERE ENCOUNTERED TO THE SATISFACTION OF THE GEOTECHNICAL ENGINEER. SUB-GRADE TO BE FREE FROM DEBRIS, SNOW, ICE, WATER AND FROZEN GROUND. COMPACT SUB-GRADE TO 95%.
6.4 CONSTRUCT GRANULAR BASE AND SUB-BASE TO DEPTH AND GRADE IN AREAS INDICATED.CONSTRUCT A 5H:1V FROST TAPER IN SUB-GRADE SURFACE AS A TRANSITION BETWEEN DIFFERING PAVEMENT STRUCTURES AND BETWEEN PAVEMENT AND CURBS AND SIDEWALKS.
6.5 ENSURE NO FROZEN MATERIAL IS PLACED. PLACE MATERIAL ONLY ON CLEAN UNFROZEN SURFACE, FREE FROM SNOW OR ICE.
6.6 PLACE MATERIAL TO FULL WIDTH IN UNIFORM LAYERS NOT EXCEEDING 300mm COMPACTED THICKNESS. SHAPE EACH LAYER TO SMOOTH CONTOUR AND COMPACT TO SPECIFIED DENSITY BEFORE SUCCEEDING LAYER IS PLACED.
6.7 COMPACT SUB-BASE MATERIAL TO DENSITY OF NOT LESS THAN 98% CORRECTED MAXIMUM DRY DENSITY. FILL OVER-EXCAVATED SUB-GRADE WITH SUB-BASE MATERIAL, COMPACT TO 98%. COMPACT BASE AND SHOULDER MATERIAL TO DENSITY NOT LESS THAN 100% CORRECTED MAXIMUM DRY DENSITY.
6.8 IN AREAS NOT ACCESSIBLE TO ROLLING EQUIPMENT, COMPACT TO SPECIFIED DENSITY WITH MECHANICAL TAMPERS.
6.9 REPLACE PAVEMENT DISTURBED BY CONSTRUCTION AND REPLACE WITH PAVEMENT STRUCTURE ABOVE.
6.10 WHERE NEW ASPHALT COMES IN CONTACT WITH EXISTING PAVEMENT: SAWCUT EXISTING ASPHALT LAYER TO CREATE A CLEAN STRAIGHT EDGE AND CONSTRUCT AS PER DETAIL. TACK COAT SHALL BE APPLIED TO ASPHALT SURFACES AT WHICH JOINTS ARE TO BE MADE INCLUDING EXISTING PAVEMENT SURFACES THAT HAVE BEEN CUT, GROUND OR MILLED. TACK COAT THE SURFACE OF ALL BINDER COURSES AND BUTTING CONCRETE SURFACES. SURFACES TO BE TACK COATED SHALL BE FREE OF STANDING WATER AND CONTAMINATION, SUCH AS MUD, LOOSE AGGREGATE OR DEBRIS AND SHALL BE DRY AND CLEAN WHEN THE TACK COAT IS APPLIED. TACK COAT SHALL BE PLACED SUFFICIENTLY AHEAD OF THE PAVING OPERATION TO ALLOW FOR CURING. PAVING AND CONSTRUCTION EQUIPMENT SHALL NOT BE PERMITTED ONTO THE TACK COAT UNTIL IT HAS SET. TACK COAT MATERIAL SHALL CONSIST OF SS-1 EMULSIFIED ASPHALT DILUTED WITH AN EQUAL VOLUME OF WATER. THE UNDILUTED MATERIAL SHALL BE ACCORDING TO OPSS 1103.
6.11 SHAPE BASE TO SMOOTH CONTOUR AND COMPACT TO NOT LESS THAN 100% CORRECTED MAXIMUM DRY DENSITY BEFORE BEGINNING PAVING OPERATIONS.
6.12 APPLY ASPHALTIC CONCRETE ONLY WHEN BASE OR PREVIOUS COURSE IS DRY AND AIR TEMPERATURE IS ABOVE 5 DEG.C
6.13 ROLL UNTIL ROLLER MARKS ARE ELIMINATED AND COMPACTED TO NOT LESS THAN 95% OF DENSITY. COMPACT WITH HOT TAMPERS IN AREAS INACCESSIBLE TO A ROLLER. BEVEL EDGES ADJACENT TO GRANULAR SURFACES.
6.14 FINISH SURFACE SMOOTH, TRUE TO GRADE.
6.15 KEEP VEHICULAR TRAFFIC AND OTHER LOADS OFF NEWLY PAVED AREAS UNTIL 24 HOURS AFTER PAVING.
6.16 DIVERT UNUSED AND WASTE ASPHALT TO A FACILITY APPROVED FOR ACCEPTING SUCH MATERIALS.
6.17 APPLY TRAFFIC PAINT AS IDENTIFIED ON PLAN. TRAFFIC PAINT: NON-DARKENING, HOMOGENEOUS, UNIFORM AND SMOOTH, FREE FROM SKIN, DIRT AND OTHER FOREIGN PARTICLES. APPLY TO DRY PAVEMENT SURFACE FREE FROM FROST, ICE, DUST, OIL, GREASE AND OTHER FOREIGN MATERIALS. PROTECT PAVEMENT MARKINGS UNTIL DRY.

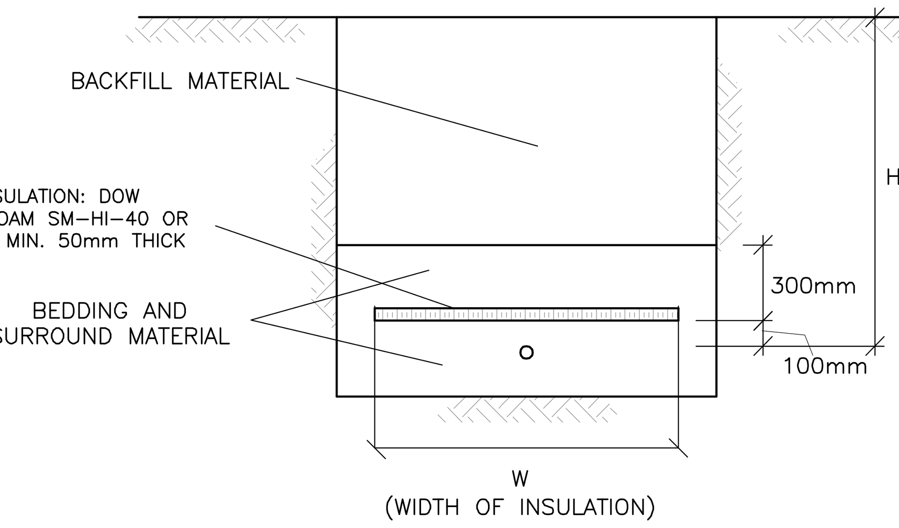

H (DEPTH OF COVER)	INSULATION THICKNESS	W (WIDTH OF INSULATION)
1800 TO 2400mm	50mm	1200mm
1500 TO 1800mm	75mm	1800mm
1200 TO 1500mm	100mm	2400mm

INSULATE SEWER AS INDICATED AND WHERE DEPTH OF COVER COVER IS LESS THAN 2400mm.
PROVIDE A MINIMUM 1200mm COVER.
CENTER INSULATION OVER PIPE.
JOINTS BETWEEN SHEETS OF INSULATION SHALL BE STAGGERED.

INSULATION OF WELL WATER LINE SHALLOW TRENCHES
N.T.S.

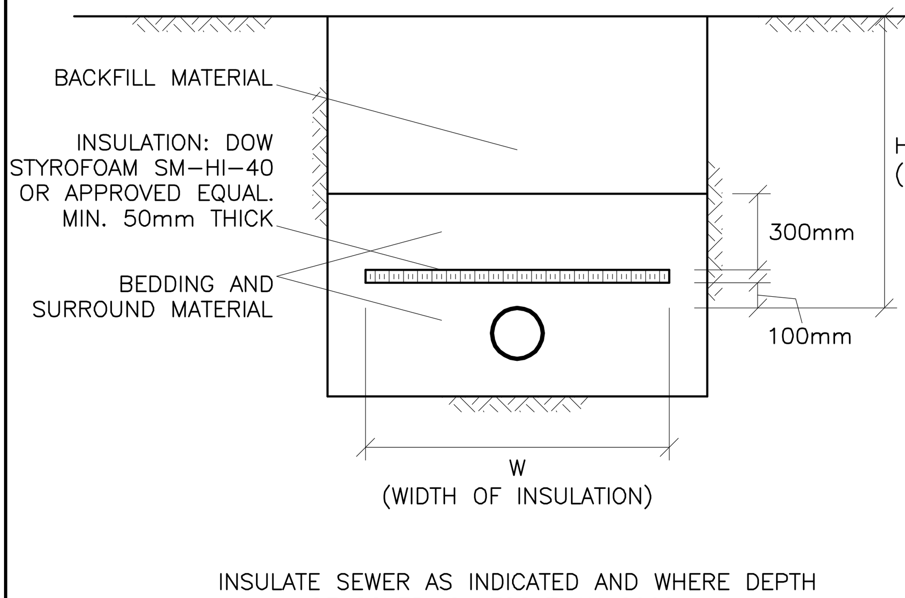

H (DEPTH OF COVER)	INSULATION THICKNESS	W (WIDTH OF INSULATION)
1400 TO 2000mm	50mm	1200mm + DIAMETER OF PIPE
1100 TO 1400mm	75mm	1800mm + DIAMETER OF PIPE
800 TO 1100mm	100mm	2400mm + DIAMETER OF PIPE
LESS THAN 800mm	125mm	3000mm + DIAMETER OF PIPE

INSULATE SEWER AS INDICATED AND WHERE DEPTH OF COVER IS LESS THAN 2000mm.
CENTER INSULATION OVER PIPE.
JOINTS BETWEEN SHEETS OF INSULATION SHALL BE STAGGERED.

INSULATION OF SEWERS IN SHALLOW TRENCHES
AS PER CITY OF OTTAWA DRAWING No. S35
N.T.S

KEY PLAN

No.	DATE	REVISION
2	JAN 13-25	ISSUED FOR APPROVAL
1	DEC 18-24	ISSUED FOR COORDINATION

D. B. GRAY ENGINEERING INC.
Stormwater Management - Grading & Drainage - Storm & Sanitary Sewers - Watermains
700 Long Point Circle 613-425-8044
Ottawa, Ontario d.gray@dbgrayengineering.com

Project
PROPOSED
1-STOREY BUILDING
1386-1394 GREELY LANE
GREELY, ONTARIO

Drawing Title
NOTES & DETAILS

Engineer's Seal
LICENSED PROFESSIONAL ENGINEER
D.B. GRAY
17016502
JAN 13-25
PROVINCE OF ONTARIO
NOT VALID UNLESS SIGNED & DATED

Drawn	D.B.G
H. Scale	
V. Scale	
Date	SEP 20-24
Job No.	24015

Drawing No.
C-9
of 9