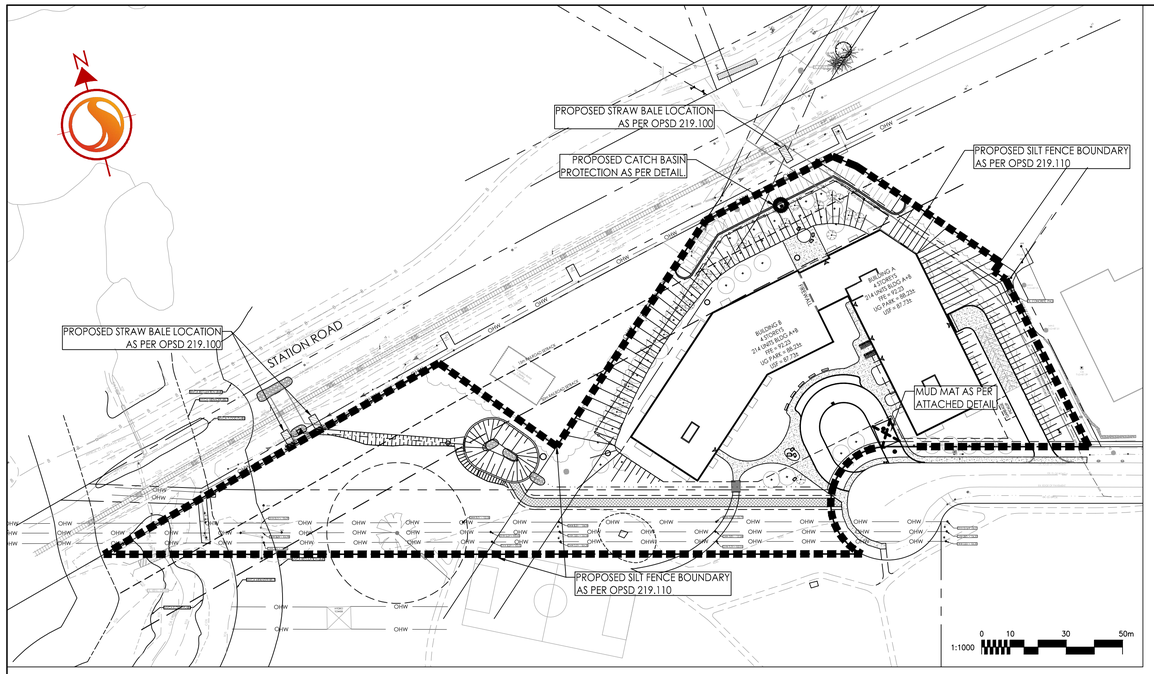

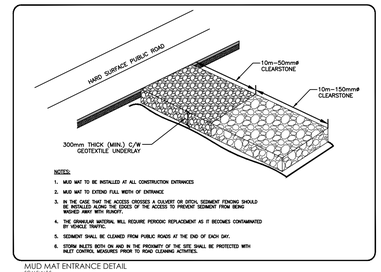

NOTES:
1. MUD MAT TO BE INSTALLED AT ALL CONSTRUCTION ENTRANCES
2. MUD MAT TO EXTEND FULL WIDTH OF ENTRANCE
3. IN THE CASE THAT THE ACCESS CROSSES A CULVERT OR DITCH, SEDIMENT FENCING SHOULD BE INSTALLED ALONG THE SIDES OF THE ACCESS TO PREVENT SEDIMENT FROM BEING WASHED AWAY WITH RUNOFF.
4. THE GRANULAR MATERIAL WILL REQUIRE PERIODIC REPLACEMENT AS IT BECOMES CONTAMINATED BY VEHICLE TRAFFIC.
5. SEDIMENT SHALL BE CLEANED FROM PUBLIC ROADS AT THE END OF EACH DAY.
6. STORM INLETS BOTH ON AND IN THE PROXIMITY OF THE SITE SHALL BE PROTECTED WITH INLET CONTROL MEASURES PRIOR TO ROAD CLEANING ACTIVITIES.

MUD MAT ENTRANCE DETAIL
SCALE: N.T.S.

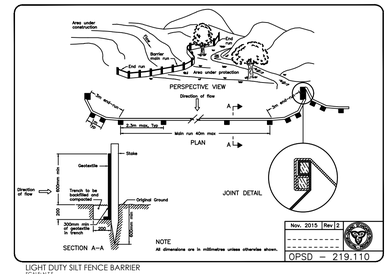

LIGHT DUTY SILT FENCE BARRIER
SCALE: N.T.S.

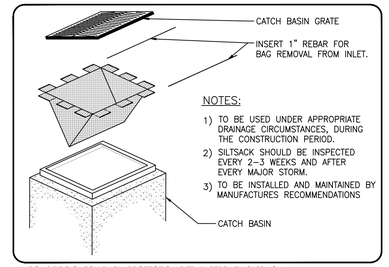

NOTES:
1) TO BE USED UNDER APPROPRIATE DRAINAGE CIRCUMSTANCES, DURING THE CONSTRUCTION PERIOD.
2) SILTSACK SHOULD BE INSPECTED EVERY 2–3 WEEKS AND AFTER EVERY MAJOR STORM.
3) TO BE INSTALLED AND MAINTAINED BY MANUFACTURES RECOMMENDATIONS

ROADSIDE CATCH BASIN PROTECTION DETAIL: TERRAFIX SILTSACK
SCALE: N.T.S.

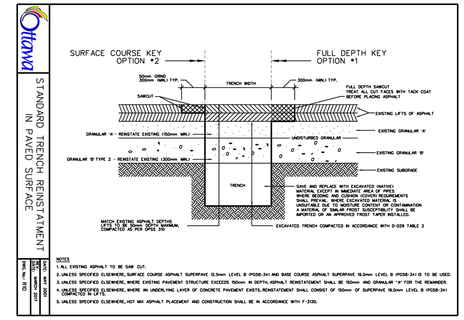

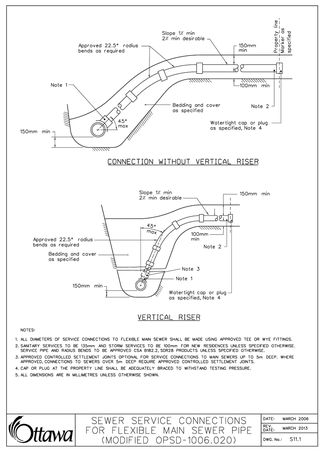

NOTES:
1. ALL DIAMETERS OF SERVICE CONNECTIONS TO FLEXIBLE MAIN SEWER SHALL BE MADE USING APPROVED TEE OR WYE FITTINGS.
2. SANITARY SERVICES TO BE 100mm AND STORM SERVICES TO BE 150mm FOR NEW RESIDENCES UNLESS SPECIFIED OTHERWISE. SERVICE PIPE AND ELBOW BENDS TO BE APPROVED CSA B182.2 SDR35 PRODUCTS UNLESS SPECIFIED OTHERWISE.
3. SERVICE CONNECTIONS TO FLEXIBLE MAIN SEWER SHALL BE MADE WITHIN THE MIDDLE HORIZONTAL 45° SEGMENT OF THE PIPE. SERVICE CONNECTIONS TO SEWERS OVER 5m DEEP REQUIRE APPROVED CONTROLLED SETTLEMENT JOINTS.
4. CAP OR PLUG AT THE PROPERTY LINE SHALL BE ADEQUATELY BRACED TO WITHSTAND TESTING PRESSURE.
5. ALL DIMENSIONS ARE IN MILLIMETRES UNLESS OTHERWISE SHOWN.

Ottawa — SEWER SERVICE CONNECTIONS FOR FLEXIBLE MAIN SEWER PIPE (MODIFIED OPSD-1006.020) — DATE: MARCH 2008 — REV. DATE: MARCH 2013 — DWG. No.: S11.1

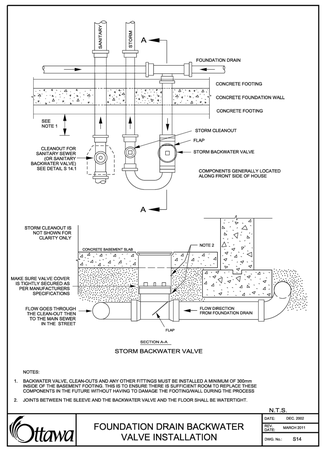

STORM BACKWATER VALVE

NOTES:
1. BACKWATER VALVE, CLEAN-OUTS AND ANY OTHER FITTINGS MUST BE INSTALLED A MINIMUM OF 300mm INSIDE OF THE BASEMENT FOOTING. THIS IS TO ENSURE THERE IS SUFFICIENT ROOM TO REPLACE THESE COMPONENTS IN THE FUTURE WITHOUT HAVING TO DAMAGE THE FOOTINGWALL DURING THE PROCESS
2. JOINTS BETWEEN THE SLEEVE AND THE BACKWATER VALVE AND THE FLOOR SHALL BE WATERTIGHT.

Ottawa — FOUNDATION DRAIN BACKWATER VALVE INSTALLATION — N.T.S. — DATE: DEC. 2002 — REV. DATE: MARCH 2011 — DWG. No.: S14

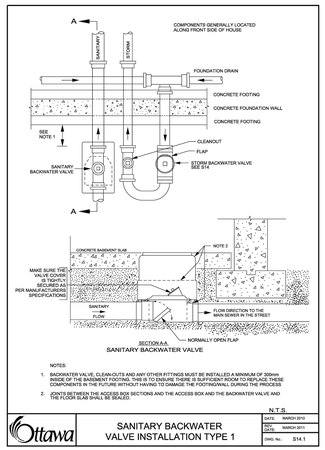

SANITARY BACKWATER VALVE

NOTES:
1. BACKWATER VALVE, CLEAN-OUTS AND ANY OTHER FITTINGS MUST BE INSTALLED A MINIMUM OF 300mm INSIDE OF THE BASEMENT FOOTING. THIS IS TO ENSURE THERE IS SUFFICIENT ROOM TO REPLACE THESE COMPONENTS IN THE FUTURE WITHOUT HAVING TO DAMAGE THE FOOTINGWALL DURING THE PROCESS
2. JOINTS BETWEEN THE ACCESS BOX SECTIONS AND THE ACCESS BOX AND THE BACKWATER VALVE AND THE FLOOR SLAB SHALL BE SEALED

Ottawa — SANITARY BACKWATER VALVE INSTALLATION TYPE 1 — N.T.S. — DATE: MARCH 2010 — REV. DATE: MARCH 2011 — DWG. No.: S14.1

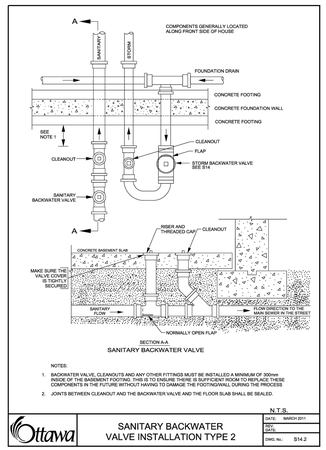

SANITARY BACKWATER VALVE

NOTES:
1. BACKWATER VALVE, CLEANOUTS AND ANY OTHER FITTINGS MUST BE INSTALLED A MINIMUM OF 300mm INSIDE OF THE BASEMENT FOOTING. THIS IS TO ENSURE THERE IS SUFFICIENT ROOM TO REPLACE THESE COMPONENTS IN THE FUTURE WITHOUT HAVING TO DAMAGE THE FOOTINGWALL DURING THE PROCESS
2. JOINTS BETWEEN CLEANOUT AND THE BACKWATER VALVE AND THE FLOOR SLAB SHALL BE SEALED.

Ottawa — SANITARY BACKWATER VALVE INSTALLATION TYPE 2 — N.T.S. — DATE: MARCH 2011 — REV. DATE: — DWG. No.: S14.2

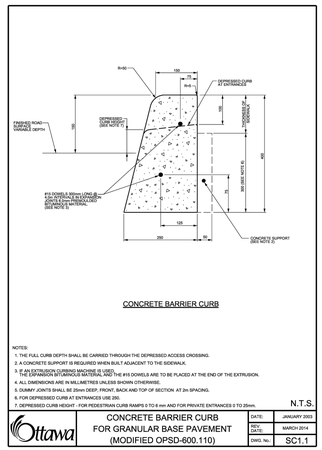

CONCRETE BARRIER CURB

NOTES:
1. THE FULL CURB DEPTH SHALL BE CARRIED THROUGH THE DEPRESSED ACCESS CROSSING.
2. A CONCRETE SUPPORT SHALL BE PLACED WHEN BUILT ADJACENT TO THE SIDEWALK.
3. IF AN EXTRUSION CURBING MACHINE IS USED, THE EXPANSION BITUMINOUS MATERIAL AND THE #15 DOWELS ARE TO BE PLACED AT THE END OF THE EXTRUSION.
4. ALL DIMENSIONS ARE IN MILLIMETRES UNLESS SHOWN OTHERWISE.
5. DUMMY JOINTS SHALL BE 25mm DEEP, FRONT, BACK AND TOP OF SECTION AT 2m SPACING.
6. FOR DEPRESSED CURB AT ENTRANCES USE 250.
7. DEPRESSED CURB HEIGHT - FOR PEDESTRIAN CURB RAMPS 0 TO 6 mm AND FOR PRIVATE ENTRANCES 0 TO 25mm.

Ottawa — CONCRETE BARRIER CURB FOR GRANULAR BASE PAVEMENT (MODIFIED OPSD-600.110) — N.T.S. — DATE: JANUARY 2003 — REV. DATE: MARCH 2014 — DWG. No.: SC1.1

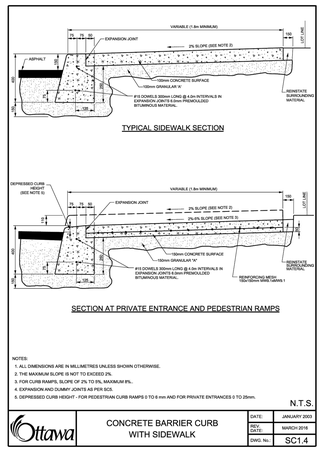

NOTES:
1. ALL DIMENSIONS ARE IN MILLIMETRES UNLESS SHOWN OTHERWISE.
2. THE MAXIMUM SLOPE IS NOT TO EXCEED 2%.
3. FOR CURB RAMPS, SLOPE OF 2% TO 5%, MAXIMUM 8%.
4. EXPANSION AND DUMMY JOINTS AS PER SC3.
5. DEPRESSED CURB HEIGHT - FOR PEDESTRIAN CURB RAMPS 0 TO 6 mm AND FOR PRIVATE ENTRANCES 0 TO 25mm.

Ottawa — CONCRETE BARRIER CURB WITH SIDEWALK — N.T.S. — DATE: MARCH 2003 — REV. DATE: MARCH 2016 — DWG. No.: SC1.4

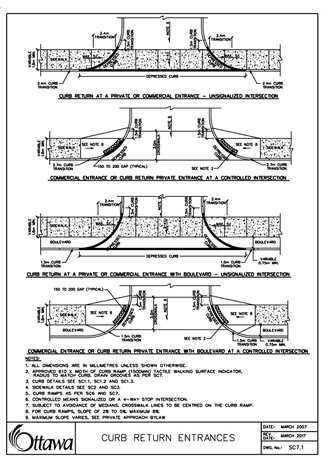

NOTES:
1. ALL DIMENSIONS ARE IN MILLIMETRES UNLESS SHOWN OTHERWISE.
2. REQUIRE TO SUPPORT PLACEMENT OF TACTILE WALKING SURFACE INDICATOR.
3. SIDEWALK TO BE CONTINUOUS ACROSS DRIVEWAYS WHERE SC1.
4. CURB DETAILS SEE SC1.1, SC1.2 AND SC1.3.
5. SIDEWALK DETAILS SEE SC2 AND SC3.
6. CURB RAMPS AS PER SC6 AND SC7.
7. CONTROLLED MEANS SIGNALIZED OR A 4-WAY STOP INTERSECTION.
8. SUBJECT TO APPROVAL OF THE CITY ENGINEER. DRIVEWALK LINES TO BE CENTRED ON THE CURB RAMP.
9. FOR MUNICIPAL SIDEWALK WIDTH OF 1.8m TO 5ft, MAXIMUM 8%.
10. MAXIMUM SLOPE VARIES; SEE PRIVATE APPROACH BYLAW

Ottawa — CURB RETURN ENTRANCES — DATE: MARCH 2007 — REV. DATE: MARCH 2017 — DWG. No.: SC7.1

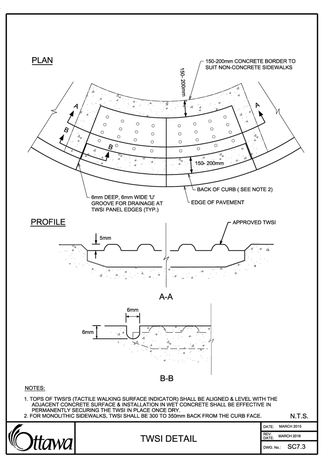

NOTES:
1. TOPS OF TWSI'S (TACTILE WALKING SURFACE INDICATOR) SHALL BE ALIGNED & LEVEL WITH THE ADJACENT CONCRETE SURFACE & INSTALLATION IN WET CONCRETE SHALL BE EFFECTIVE IN PERMANENTLY SECURING THE TWSI IN PLACE ONCE DRY.
2. FOR MONOLITHIC SIDEWALKS, TWSI SHALL BE 300 TO 350mm BACK FROM THE CURB FACE.

Ottawa — TWSI DETAIL — N.T.S. — DATE: MARCH 2015 — REV. DATE: MARCH 2016 — DWG. No.: SC7.3

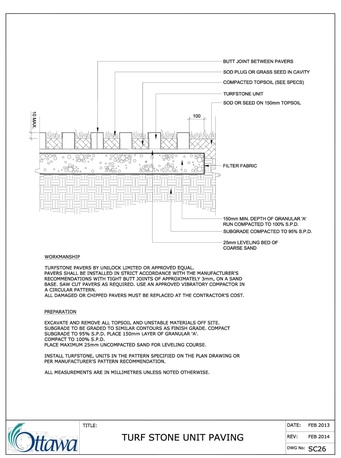

Ottawa — TITLE: TURF STONE UNIT PAVING — DATE: FEB 2013 — REV: FEB 2014 — DWG No: SC26

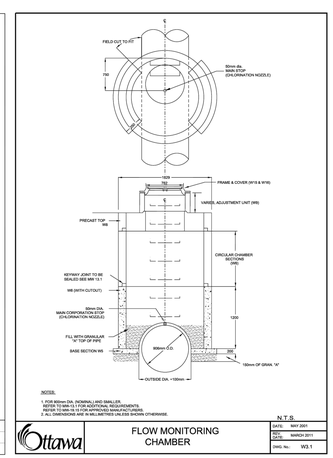

Ottawa — TITLE: FLOW MONITORING CHAMBER — N.T.S. — DATE: MAY 2001 — REV. DATE: MARCH 2013 — DWG. No.: WS 1

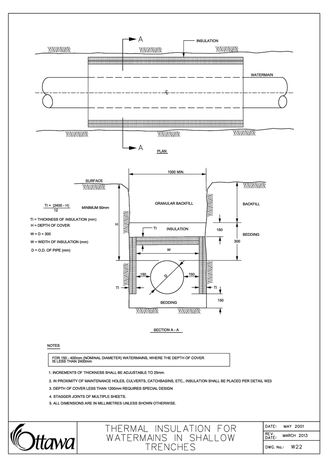

Ottawa — THERMAL INSULATION FOR WATERMAINS IN SHALLOW TRENCHES — DATE: MAY 2001 — REV. DATE: MARCH 2013 — DWG. No.: W22

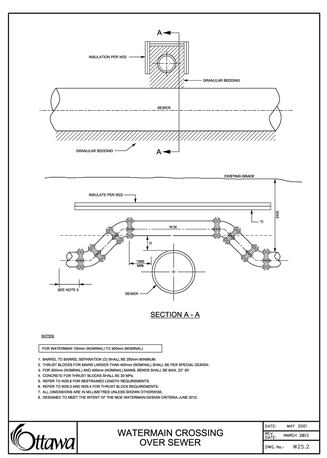

Ottawa — WATERMAIN CROSSING OVER SEWER — DATE: MAY 2001 — REV. DATE: MARCH 2013 — DWG. No.: W25.2

ORIGINAL SHEET - ARCH D

V:\01-604-Contrib\160401570\design\drawing\160401570 08.dwg
2024/12/03 1:42 PM By: Wilkins, William

Stantec

Stantec Consulting Ltd.
400 - 1331 Clyde Avenue
Ottawa ON
Tel. 613.722.4420
www.stantec.com

Copyright Reserved
The Contractor shall verify and be responsible for all dimensions. DO NOT scale the drawing - any errors or omissions shall be reported to Stantec without delay.
The Copyrights to all designs and drawings are the property of Stantec. Reproduction or use for any purpose other than that authorized by Stantec is forbidden.

Legend

- PROPOSED SILT FENCE BOUNDARY AS PER OPSD 219.110
- PROPOSED STRAW BALE LOCATION AS PER OPSD 219.100
- PROPOSED CATCH BASIN PROTECTION AS PER DETAIL.
- PROPOSED MUD MAT LOCATION
- PROPOSED VALVE BOX
- PROPOSED VALVE CHAMBER
- PROPOSED FIRE HYDRANT
- PROPOSED VALVE AND DMA CHAMBER AS PER CITY STD W3
- PROPOSED SANITARY SEWER MANHOLE
- PROPOSED STORM SEWER MANHOLE
- PROPOSED CATCHBASIN

Notes

Best Management Practices

CONTRACTOR TO PROVIDE EROSION AND SEDIMENT CONTROLS (BEST MANAGEMENT PRACTICES) DURING CONSTRUCTION OF THIS PROJECT. THE CONTRACTOR SHALL IMPLEMENT BEST MANAGEMENT PRACTICES, TO PROVIDE FOR PROTECTION OF THE AREA DRAINAGE SYSTEM AND THE RECEIVING WATERCOURSE, DURING CONSTRUCTION ACTIVITIES. THE CONTRACTOR ACKNOWLEDGES THAT FAILURE TO IMPLEMENT APPROPRIATE EROSION AND SEDIMENT CONTROL MEASURES MAY BE SUBJECT TO PENALTIES IMPOSED BY ANY APPLICABLE REGULATORY AGENCY.

EROSION MUST BE MINIMIZED AND SEDIMENTS MUST BE REMOVED FROM CONSTRUCTION SITE RUN-OFF IN ORDER TO PROTECT DOWNSTREAM AREAS. DURING ALL CONSTRUCTION, EROSION AND SEDIMENTATION SHOULD BE CONTROLLED BY THE FOLLOWING TECHNIQUES:

1. LIMIT THE EXTENT OF EXPOSED SOILS AT ANY GIVEN TIME.
2. REVEGETATE EXPOSED AREAS AND SLOPES AS SOON AS POSSIBLE.
3. MINIMIZE AREA TO BE CLEARED AND GRUBBED.
4. PROTECT EXPOSED SLOPES WITH PLASTIC OR SYNTHETIC MULCHES.
5. INSTALL CATCH BASIN INSERTS OR EQUIVALENT IN ALL PROPOSED CATCH BASINS AND CATCH BASIN MANHOLES AND IN ALL EXISTING CATCH BASINS THAT WILL RECEIVE RUN-OFF FROM THE SITE.
6. A SILT FENCE SHALL BE INSTALLED AROUND THE PERIMETER OF ALL AND ANY STOCKPILES OF MATERIAL TO BE USED OR REMOVED FROM SITE. (LOCATION TO BE DETERMINED)
7. A VISUAL INSPECTION SHALL BE DONE DAILY ON SEDIMENT CONTROL MEASURES AND CLEANED OF ANY ACCUMULATED SILT AS REQUIRED. THE DEPOSITS WILL BE DISPOSED OFF SITE AS PER THE REQUIREMENTS OF THE CONTRACT.
8. SEDIMENT CONTROL BARRIERS MAY ONLY BE REMOVED TEMPORARILY WITH APPROVAL OF CONTRACT ADMINISTRATOR TO ACCOMMODATE CONSTRUCTION OPERATIONS. ALL AFFECTED BARRIERS MUST BE REINSTATED AT NIGHT WHEN CONSTRUCTION IS COMPLETED. NO REMOVAL WILL OCCUR IF THERE IS A SIGNIFICANT RAINFALL EVENT ANTICIPATED (>10mm) UNLESS A NEW DEVICE HAS BEEN INSTALLED TO PROTECT EXISTING STORM AND SANITARY SEWER SYSTEMS, OR DOWNSTREAM WATERCOURSES.
9. NO REFUELING OR CLEANING OF EQUIPMENT IS PERMITTED NEAR ANY EXISTING WATERWAY.
10. CONTRACTOR SHALL REMOVE SEDIMENT CONTROL MEASURES WHEN, IN THE OPINION OF THE CONTRACT ADMINISTRATOR, THE MEASURE(S) IS NO LONGER REQUIRED. NO CONTROL MEASURES SHALL BE PERMANENTLEY REMOVED WITHOUT PRIOR WRITTEN AUTHORIZATION FROM THE CONTRACT ADMINISTRATOR.
11. THE CONTRACTOR SHALL PERIODICALLY, OR WHEN REQUESTED BY THE CONTRACT ADMINISTRATOR, CLEAN OUT ACCUMULATED SEDIMENTS AS REQUIRED.
12. THE CONTRACTOR SHALL IMMEDIATELY REPORT TO THE ENGINEER ANY ACCIDENTAL DISCHARGES OF SEDIMENT MATERIAL INTO THE WATERCOURSE. APPROPRIATE RESPONSE MEASURES, INCLUDING ANY REPAIRS TO EXISTING CONTROL MEASURES OR THE IMPLEMENTATION OF ADDITIONAL CONTROL MEASURES, SHALL BE CARRIED OUT BY THE CONTRACTOR WITHOUT DELAY.
13. CONTRACTOR SHALL INSTALL MUD MATS AT ALL CONSTRUCTION ENTRANCES TO THE SITE.
14. STORMWATER SWALES TO BE COVERED WITH HYDRO-SEED AND MULCH.

Revision		By	Appd.	YY.MM.DD
5	REVISED AS PER SITE PLAN AND CITY COMMENTS	MJS	DT	24.12.02
4	REVISED AS PER SITE PLAN AND CITY COMMENTS	MJS	DT	24.04.08
3	REVISED WATERMAIN SIZE	MJS	DT	22.04.08
2	REVISED AS PER CITY COMMENTS	MJS	TR	21.05.07
1	ISSUED FOR REVIEW	MJS	TR	20.11.23

File Name: 160401570 D8	MJS	AMP	MJS	20.08.17
	Dwn.	Chkd.	Dsgn.	YY.MM.DD

Permit-Seal

LICENSED PROFESSIONAL ENGINEER
D. C. THIFFAULT
100186107
2024-12-03
PROVINCE OF ONTARIO

Client/Project
BRIGIL

100 STEACIE DRIVE

OTTAWA, ON

Title
EROSION CONTROL PLAN AND DETAIL SHEET

Project No. 160401570
Scale N.T.S
Drawing No. EC/DS-1
Sheet 7 of 10
Revision 5
PLAN# 18327

D02-02-02-0094