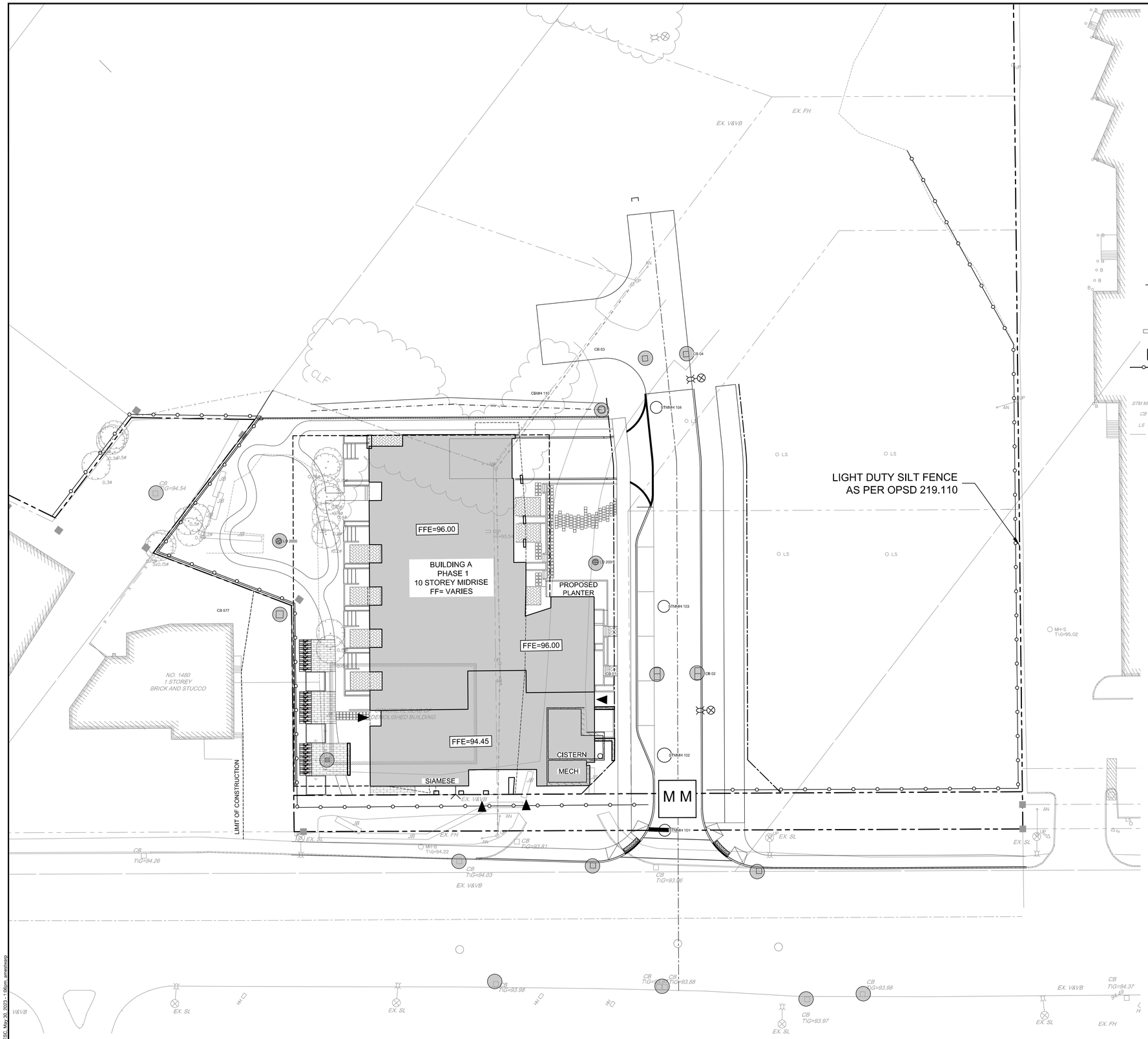

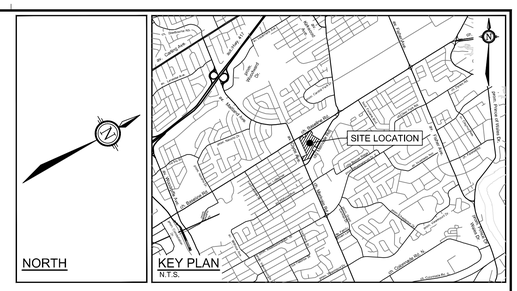

LEGEND

- PROPERTY LINE
- PROPOSED CURB
- DC — PROPOSED DEPRESSED CURB
- FC — PROPOSED FLUSH CURB
- PROPOSED RETAINING WALL C/W GUARD RAIL
- PROPOSED WALKWAY
- TACTILE WALKING SURFACE INDICATOR (TWSI) PER CITY DETAIL SC7.3
- PROPOSED CAP
- PROPOSED STORM SEWER AND MANHOLE
- PROPOSED CATCHBASIN MANHOLE
- PROPOSED CATCHBASIN
- PROPOSED LANDSCAPE DRAIN
- PROPOSED AREA DRAIN
- PROPOSED TRENCH DRAIN
- PROPOSED FILTER BAGS AT CATCHBASINS, CATCHBASIN MANHOLES AND TRENCHDRAINS
- M M — PROPOSED MUD MAT
- LIGHT DUTY SILT FENCE (OPSD 219.110)
- PROPOSED BUILDING ENTRANCE
- BOREHOLE LOCATION (REFER TO GEOTECH REPORT)
- STM MH — EXISTING STORM MANHOLE
- CB 1 — EXISTING CATCHBASIN
- LS — EXISTING LIGHT STANDARD
- X — EXISTING FENCE

EROSION AND SEDIMENT CONTROL NOTES:

THE CONTRACTOR SHALL IMPLEMENT BEST MANAGEMENT PRACTICES, TO PROVIDE FOR PROTECTION OF THE AREA DRAINAGE SYSTEM AND THE RECEIVING WATERCOURSE, DURING CONSTRUCTION ACTIVITIES. THE CONTRACTOR ACKNOWLEDGES THAT FAILURE TO IMPLEMENT APPROPRIATE EROSION AND SEDIMENT CONTROL MEASURES MAY BE SUBJECT TO PENALTIES IMPOSED BY ANY APPLICABLE REGULATORY AGENCY.

1) THE OWNER AGREES TO PREPARE AND IMPLEMENT AN EROSION AND SEDIMENT CONTROL PLAN TO THE SATISFACTION OF THE CITY OF OTTAWA, APPROPRIATE TO THE SITE CONDITIONS, PRIOR TO UNDERTAKING ANY SITE ALTERATIONS (FILLING, GRADING, REMOVAL OF VEGETATION, ETC.) AND DURING ALL PHASES OF SITE PREPARATION AND CONSTRUCTION IN ACCORDANCE WITH THE CURRENT BEST MANAGEMENT PRACTICES FOR EROSION AND SEDIMENT CONTROL SUCH AS BUT NOT LIMITED TO INSTALLING FILTER CLOTHS ACROSS MANHOLE/CATCHBASIN LIDS TO PREVENT SEDIMENTS FROM ENTERING STRUCTURES AND INSTALL AND MAINTAIN A LIGHT DUTY SILT FENCE BARRIER AS REQUIRED.

2) THE CONTRACTOR SHALL PLACE FILTER BAGS UNDER THE CATCHBASIN AND MANHOLE GRATES FOR THE DURATION OF CONSTRUCTION AND WILL REMAIN IN PLACE DURING ALL PHASES OF CONSTRUCTION.

3) SILT FENCING FOR ENTIRE PERIMETER OF SITE, SHALL BE UTILIZED TO CONTROL EROSION FROM THE SITE DURING CONSTRUCTION.

4) THE CONTRACTOR ACKNOWLEDGES THAT FAILURE TO IMPLEMENT EROSION AND SEDIMENT CONTROL MEASURES MAY BE SUBJECT TO PENALTIES IMPOSED BY ANY APPLICABLE REGULATORY AGENCY.

5) PROVIDE MUD MATS AT ALL CONSTRUCTION ACCESS POINTS TO MINIMIZE SEDIMENT TRANSPORT OFFSITE.

6) EROSION AND SEDIMENT CONTROL MEASURES MAY BE MODIFIED IN THE FIELD AT THE DISCRETION OF THE CITY OF OTTAWA SITE INSPECTOR OR CONSERVATION AUTHORITY.

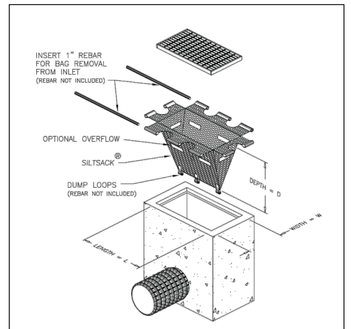

TEMPORARY CATCHBASIN INSERT DETAIL - SILTSACK
BY TERRAFIX (OR APPROVED EQUIVALENT)
N.T.S.

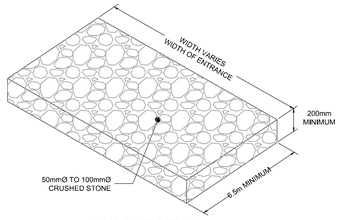

MUD MAT DETAIL
NOT TO SCALE

REFER TO121009-NDGP1FOR ADDITIONAL NOTES & DETAILS

NOTE:
THE POSITION OF ALL POLE LINES, CONDUITS, WATERMAINS, SEWERS AND OTHER UNDERGROUND AND OVERGROUND UTILITIES AND STRUCTURES IS NOT NECESSARILY SHOWN ON THE CONTRACT DRAWINGS, AND WHERE SHOWN, THE ACCURACY OF THE POSITION OF SUCH UTILITIES AND STRUCTURES IS NOT GUARANTEED, BEFORE STARTING WORK, DETERMINE THE EXACT LOCATION OF ALL SUCH UTILITIES AND STRUCTURES AND ASSUME ALL LIABILITY FOR DAMAGE TO THEM.

CLARIDGE HOMES
505 PRESTON STREET,
2ND FLOOR
OTTAWA , ONTARIO
K1S 4N7

CLARIDGE HOMES

NOT FOR CONSTRUCTION

No.	REVISION	DATE	BY
3.	REISSUED PHASE 1 ONLY	OCT 27/2023	GJM
2.	REVISED AND ISSUED FOR CITY APPROVAL	DEC 09/2022	GJM
1.	ISSUED WITH SITE PLAN APPLICATION	SEPT 03/2021	JAG

SCALE 1:250

DESIGN ARM
CHECKED GJM
DRAWN CJF/ARM
CHECKED ARM
APPROVED GJM

LICENSED PROFESSIONAL ENGINEER A.R. MESTWARP 100201604 PROVINCE OF ONTARIO

LICENSED PROFESSIONAL ENGINEER G.J. MacDONALD OCTOBER 27, 2023 PROVINCE OF ONTARIO

NOVATECH
Engineers, Planners & Landscape Architects
Suite 200, 240 Michael Cowpland Drive
Ottawa, Ontario, Canada K2M 1P6
Telephone (613) 254-9643
Facsimile (613) 254-5867
Website www.novatech-eng.com

LOCATION
1500 MERIVALE
1500 MERIVALE, CITY OF OTTAWA

DRAWING NAME
EROSION AND SEDIMENT CONTROL (PHASE1)

PROJECT No. 121009
REV REV#3
DRAWING No. 121009-ESC1

CITY FILE No.D07-12-21-0152

CITY PLAN No. 18612

M:\2012\121009\CAD\Design\121009-ESC1.dwg, ESC, May 30, 2023 - 1:09pm, amstrwarp