GENERAL NOTES:

1. ALL MATERIALS AND CONSTRUCTION METHODS TO THE LATEST EDITION OF THE ONTARIO PROVINCIAL STANDARD SPECIFICATIONS AND ONTARIO PROVINCIAL STANDARD DRAWINGS.
2. ALL UNITS ARE IN METERS OR MILLIMETRES UNLESS OTHERWISE NOTED.
3. THE CONTRACTOR SHALL BE RESPONSIBLE FOR ALL EXCAVATION AND TRENCHING ALONG WITH BACKFILL TO STANDARDS SPECIFIED.
4. THE CONTRACTOR SHALL REFER TO THE GEOTECHNICAL INVESTIGATION REPORT PREPARED BY exp SERVICES INC. DATED JANUARY 27, 2017 AND SEPTEMBER 14, 2022 PAVEMENT STRUCTURE LETTER. INFORMATION CONTAINED IN THIS REPORT DOES NOT NECESSARILY REPRESENT THE SUBSURFACE CONDITIONS AT ALL LOCATIONS AT THE TIME OF CONSTRUCTION. THE CONTRACTOR SHALL CARRY OUT THEIR OWN TEST PITS TO MAKE AN INDEPENDENT ASSESSMENT OF GROUND CONDITIONS AT THEIR OWN DISCRETION. NO CLAIM FOR EXTRA COSTS SHALL BE MADE IF SURFACE OR SUBSURFACE CONDITIONS VARY FROM THOSE INDICATED IN THE GEOTECHNICAL REPORT.
5. ALL DIMENSIONS SHALL BE CHECKED AND VERIFIED IN THE FIELD BY THE CONTRACTOR PRIOR TO THE START OF CONSTRUCTION ANY DISCREPANCIES SHALL BE REPORTED IMMEDIATELY TO THE ENGINEER.
6. AS–BUILT DRAWINGS WILL BE MAINTAINED ON SITE BY THE CONTRACTOR.
7. THE LOCATION OF UTILITIES IS APPROXIMATE ONLY, AND THE EXACT LOCATION SHOULD BE DETERMINED BY CONSULTING THE MUNICIPAL AUTHORITIES AND UTILITY COMPANIES CONCERNED. THE CONTRACTOR IS RESPONSIBLE TO PROVIDE THE LOCATION AND STATUS OF UTILITIES AND SHALL BE RESPONSIBLE FOR ADEQUATE PROTECTION OF PLANT AND EQUIPMENT FROM DAMAGE.
8. CONTRACTOR TO REMOVE ALL UNSUITABLE MATERIAL FROM THE SITE (i.e. STUMPS, LARGE ROOTS, etc.).
9. ALL WORK SHALL BE COMPLETED IN ACCORDANCE WITH THE "OCCUPATIONAL HEALTH AND SAFETY ACT AND REGULATIONS FOR CONSTRUCTION PROJECT". THE GENERAL CONTRACTOR SHALL BE DEEMED TO BE THE CONSTRUCTOR AS DEFINED IN THE ACT.
10. THE CONTRACTOR SHALL COORDINATE AND PAY FOR ALL CONSTRUCTION RELATED PERMITS, FEES, INSPECTIONS AND APPROVALS REQUIRED BY THE MUNICIPAL AUTHORITIES.
11. ALL ELEVATIONS ARE GEODETIC AND UTILIZE METRIC UNITS.
12. THE CONTRACTOR SHALL COMPLETE ALL PRE–CONSTRUCTION UNDERGROUND UTILITY LOCATES AND COMPLETE ALL LAYOUT REQUIRED FOR CONSTRUCTION AND CHECKING.
13. ALL ROADS AND DRAINAGE WORKS SHALL BE CONSTRUCTED IN ACCORDANCE WITH PROVINCIAL AND MUNICIPAL STANDARDS AND SPECIFICATIONS UNLESS OTHERWISE INDICATED IN THE DRAWING DETAILS.
14. THE CONTRACTOR SHALL REINSTATE TO EXISTING CONDITIONS OR BETTER, ALL AREAS DISTURBED DURING THE PERFORMANCE OF THE WORK.
15. DESIGN ELEVATIONS AS GIVEN ON THESE PLANS ARE TO BE ADHERED TO WITH NO CHANGES WITHOUT PRIOR WRITTEN APPROVAL BY THE ENGINEER AND APPROPRIATE CITY OF OTTAWA STAFF.
16. ALL PRIVATE PROPERTY ENCROACHED UPON DURING CONSTRUCTION TO BE REINSTATED TO ORIGINAL CONDITION OR BETTER.
17. ALL DISTURBED AREAS TO BE REINSTATED TO EQUAL OR BETTER CONDITION. ALL NEW WORK SHALL TIE INTO EXISTING.
18. ALL GROUND SURFACES SHALL BE EVENLY GRADED WITHOUT PONDING AREAS AND WITHOUT LOW POINTS EXCEPT WHERE APPROVED SWALE OR CATCHBASIN OUTLETS ARE PROVIDED.
19. PERIMETER AND UNDERFLOOR FOUNDATION DRAINS SHALL BE PROVIDED FOR BUILDINGS WITH BASEMENTS. REFER TO GEOTECHNICAL REPORT. PERIMETER DRAINS/UNDERFLOOR DRAINAGE SYSTEM SHALL SLOPE TO THE STORM LATERALS.
20. NO SNOW DUMPING IS PERMITTED WITHIN THE HYDRO ONE EASEMENT CORRIDOR. SNOW MUST BE REMOVED OFF PARKING SURFACES AND DISPOSED OF OUTSIDE THE EASEMENT. SNOW DUMPING SIGNS MUST BE INSTALLED AROUND THE PARKING LOT AREAS.
21. CULVERTS SHOULD BE IMBEDDED A MINIMUM OF 10% OF THEIR DIAMETER.
22. THE CONTRACTOR IS REQUIRED TO SCHEDULE AND CO–ORDINATE ALL WORKS WITH UTILITY COMPANIES, MUNICIPAL AUTHORITIES AND OTHER CONTRACTORS ON SITE.

ROADWORK SPECIFICATIONS:

1. ROADWORK TO BE COMPLETED IN ACCORDANCE WITH LATEST GEOTECHNICAL REPORT, PREPARED EXP SERVICES INC.
2. ALL TOPSOIL AND ORGANIC MATERIAL SHALL BE STRIPPED WITHIN THE ROADWAY AND PARKING LOTS PRIOR TO THE COMMENCEMENT OF CONSTRUCTION AND STOCK PILED ONSITE AS DIRECTED BY THE ENGINEER.
3. THE SUBGRADE SHALL BE CROWNED AND SLOPED AT LEAST 2% AND PROOF ROLLED WITH A HEAVY ROLLER.
4. SUB–EXCAVATE SOFT AREAS AND FILL WITH GRANULAR "B", TYPE II COMPACTED IN MAXIMUM 300mm LIFTS.
5. ALL GRANULAR FOR ROADS SHALL BE COMPACTED TO A MINIMUM OF 100% STANDARD PROCTOR DENSITY MAXIMUM DRY DENSITY (SPMDD).

DEVELOPMENT NOTES:

1. BUILDING AND SEPTIC CONSTRUCTION TO COMPLY WITH THE REQUIREMENTS OF GEOTECHNICAL REPORT PREPARED BY EXP SERVICES INC. DATED JANUARY 27, 2017 AND THE HYDROGEOLOGY, TERRAIN ANALYSIS AND IMPACT ASSESSMENT PREPARED BY EXP SERVICES INC. DATED JANUARY 25, 2017, REVISED JULY 20, 2017.

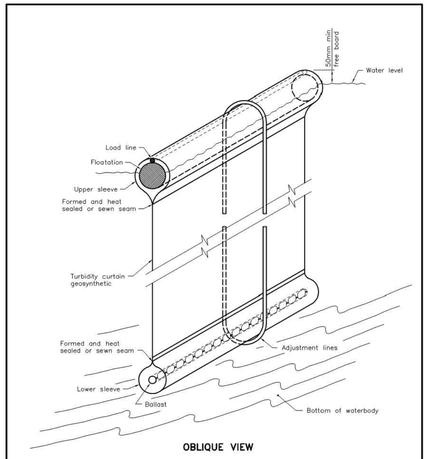

NOTES:
A All dimensions are in millimeters.

ONTARIO PROVINCIAL STANDARD DRAWING	Nov 2015	Rev 2
TURBIDITY CURTAIN SEAM DETAIL		OPSD 219.261

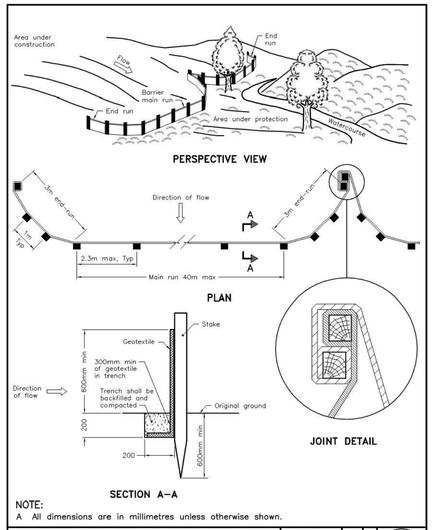

NOTE:
A All dimensions are in millimetres unless otherwise shown.

ONTARIO PROVINCIAL STANDARD DRAWING	Nov 2015	Rev 2
LIGHT–DUTY SILT FENCE BARRIER		OPSD 219.110

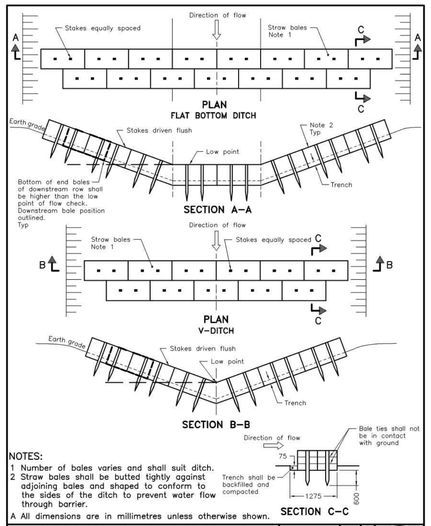

NOTES:
1 Number of bales varies and shall suit ditch.
2 Straw bales shall be butted tightly against adjoining bales and shaped to conform to the sides of the ditch to prevent water flow through barrier.

A All dimensions are in millimetres unless otherwise shown.

ONTARIO PROVINCIAL STANDARD DRAWING	Nov 2015	Rev 2
STRAW BALE FLOW CHECK DAM		OPSD 219.180

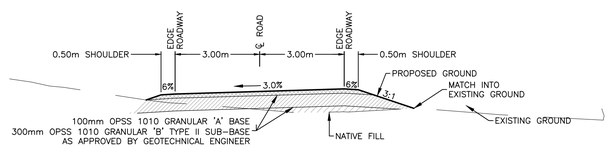

A ACCESS ROAD TYPICAL SECTION
1:100

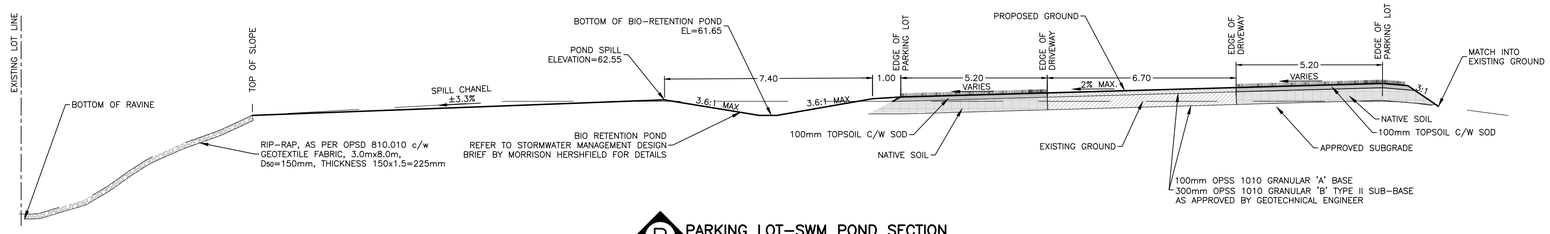

B PARKING LOT–SWM POND SECTION
1:100

NO.	REVISION DESCRIPTION	DATE	BY	APPD
11	REVISED PER CITY COMMENTS	12/05/23	AAS	BMT
10	REVISED PER CITY COMMENTS	25/04/23	SAB	BMT
9	ISSUED FOR PHASE 1B SUBMISSION	02/09/22	SAB	BMT
8	ISSUED FOR PHASE 1A SUBMISSION	17/08/22	SAB	BMT
7	REVISED PER CITY COMMENTS	26/04/22	JH	BMT
6	ISSUED FOR SITE PLAN AMENDMENT	03/12/21	AJ	BMT
5	CITY STAMP ADDED	13/12/17	SAB	BMT
4	REVISED SEPTIC BED	25/07/17	SAB	BMT
3	REVISED AS PER CITY COMMENTS	25/01/17	SAB	BMT
2	ISSUED FOR SITE PLAN APPROVAL	06/06/16	SAB	BMT
1	ISSUED FOR CLIENT REVIEW	03/06/16	SAB	BMT

SCALE: AS NOTED

DESIGNED BY

REVIEWED BY: LICENSED PROFESSIONAL ENGINEER B. M. THOMAS 2023-05-18 PROVINCE OF ONTARIO

CLIENT: HUMANICS UNIVERSAL INC.
601 BROOKRIDGE CRES
ORLEANS, ON K4A 1Z6, 613–824–1525

exp Services Inc.
t: +1.613.688.1899 | f: +1.613.225.7330
2650 Queensview Drive, Unit 100
Ottawa, ON K2B 8H6
Canada
www.exp.com
• BUILDINGS • EARTH & ENVIRONMENT • ENERGY •
• INDUSTRIAL • INFRASTRUCTURE • SUSTAINABILITY •

BASEPLAN: exp.
DESIGN: J. FITPZATRICK
CHECKED: B. THOMAS
CAD: J. FITPZTRICK
PROJ. MAN: B. THOMAS
APPROVED: J. FITZPATRICK

PROJECT: HUMANICS SANCTUARY
3400/3468 OLD MONTREAL ROAD
ORLEANS, ONTARIO.

TITLE: DETAILS AND NOTES
PHASE 1B

PROJ NO. OTT–00229886–A0
SURVEY: exp.
DATE: FEB 09, 2016
DRAWING NO. DET–1B

D07-12-23-003

Filename: \\ottfsp\2023-data\projects\civil engineering services\229000\ott-00229886-a0 - humanics sanctuary\90-project execution\2-drawings\229886-det-pb1b.dwg
Last Saved: 5/12/2023 9:40:28 PM Plotted by: Sabaw A
Last Plotted: 5/12/2023 5:45:58 PM
Plot Scale: 1:1
Plot Style: exp-A4.ctb
Reference: