BERTONE

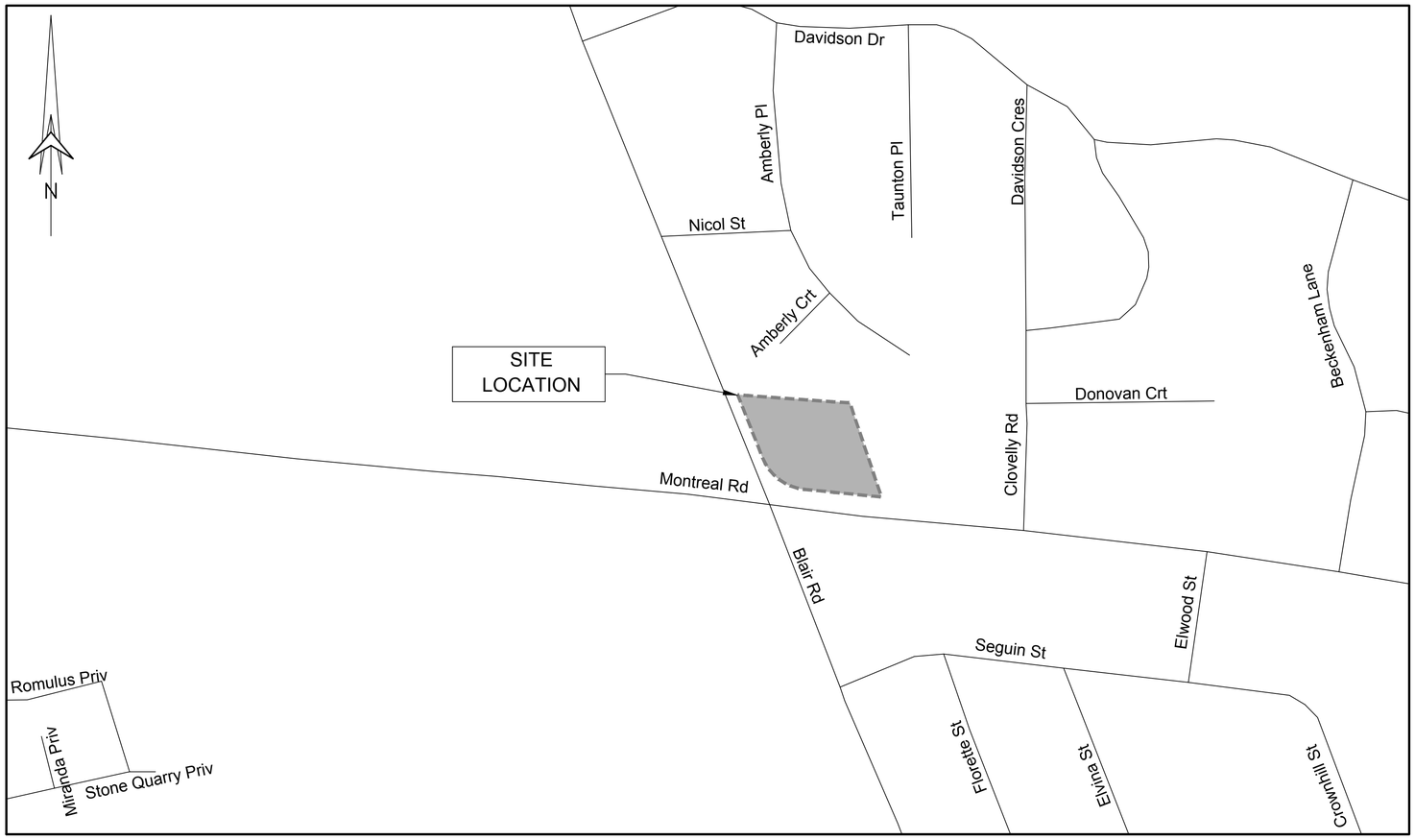

1649 MONTREAL ROAD
MONTREAL AND BLAIR ROAD

NADAO

LIST OF DRAWINGS

PLAN No:	DESCRIPTION
C000	COVER PAGE
C001	TOPOGRAPHICAL SURVEY PLAN
C002	SEDIMENT AND EROSION CONTROL PLAN
C003 (NOT INCLUDED)	NOTES PLAN – 1 of 2
C004 (NOT INCLUDED)	NOTES PLAN – 2 of 2
C005	GRADE CONTROL AND DRAINAGE PLAN
C006	SITE SERVICING PLAN
C006B	SANITARY SEWER LID REPLACEMENTS
C007	STORM WATER MANAGEMENT PLAN
C008	CIVIL DETAILS PLAN – 1 of 6
C009	CIVIL DETAILS PLAN – 2 of 6
C010	CIVIL DETAILS PLAN – 3 of 6
C011	CIVIL DETAILS PLAN – 4 of 6
C012	CIVIL DETAILS PLAN – 5 of 6
C013	CIVIL DETAILS PLAN – 6 of 6

CIMA+

T: 613.860.2492
600-1400 Blair Towers Place, Ottawa, ON K1J 9B8 CANADA

BERTONE DEVELOPMENT CORPORATION
1649 MONTREAL ROAD
REISSUED FOR SITE PLAN CONTROL - MARCH 17, 2023

C000

\\cima.plus\cima-C10\Ott_Projects\A\A001000-A001499\A001101_Blair – Mtl Road Towers\400\460_Civil\C000_Cover.dwg
16 March 2023 Zakaria Moumine

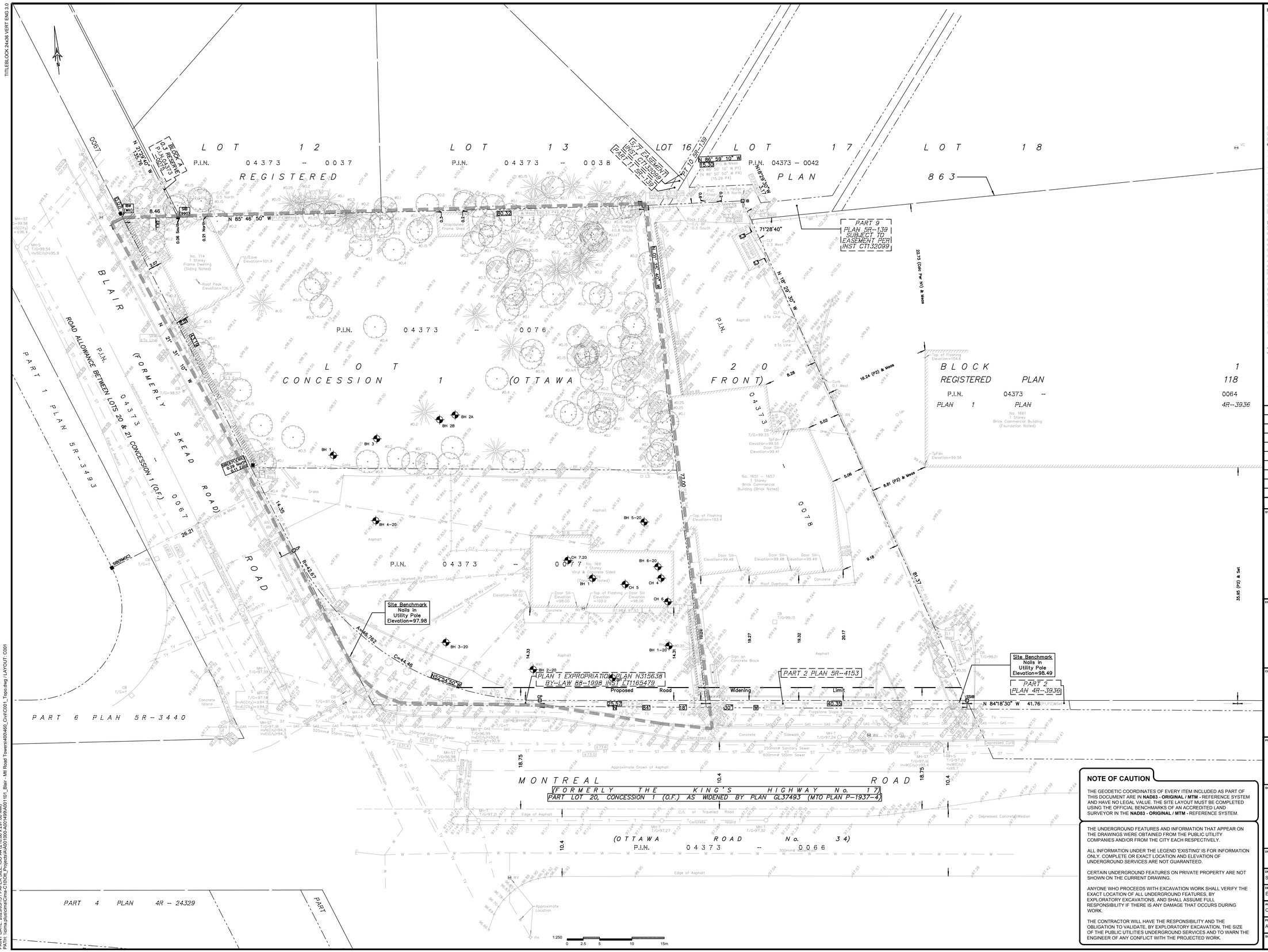

EXISTING		PROPOSED
	Survey Monument Planted	
	Survey Monument Found	
SIB	Standard Iron Bar	
SSIB	Short Standard Iron Bar	
IB	Iron Bar	
IB2	Round Iron Bar	
CP	Concrete Pin	
(Wit)	Witness	
Meas	Measured	
(P1)	Plan 5R-4153	
(P2)	Plan by (1287) dated May 26, 1986 (Job No. 236/86)	
(P3)	Plan 5R-2278	
(P4)	Registered Plan 863	
(P5)	Plan 4R-3936	
(P6)	Plan 5R-3440	
(N1)	Notes by (1287) dated August 6, 1986	
(D1)	Inst GL65177	
(D2)	Inst GL63040	
MH-ST	Maintenance Hole (Storm)	
MH-S	Maintenance Hole (Sanitary)	
MH-T	Maintenance Hole (Traffic)	
VC	Valve Chamber (Watermain)	
ST	Underground Storm Sewer	
S	Underground Sanitary Sewer	
W	Underground Water	
P	Underground Power	
GAS	Underground Gas	
B	Underground Bell	
TV	Underground Cable	
OHW	Overhead Wires	
UP	Utility Pole	
AN	Anchor	
LS	Light Standard	
CB	Catch Basin	
FH	Fire Hydrant	
WV	Water Valve	
GV	Gas Valve	
GM	Gas Meter	
TB-B	Bell Terminal Box	
TSP	Traffic Signal Post	
TSL	Traffic Light	
B	Bollard	
S	Sign	
	Gate	
TEL	Telephone Booth	
ø	Diameter	
CLF	Chain Link Fence	
BF	Board Fence	
MF	Metal Fence	
CRW	Concrete Retaining Wall	
SRW	Stone Retaining Wall	
Inv.	Invert	
T/G	Top of Grate	
U/Eave	Underside of Eave	
TpFdn	Top of Foundation	
C/L	Centreline	
+65.00	Location of Elevations	
+65.00	Top of Concrete Curb/Retaining Wall Elevation	
	Property Line	
	Easement	
	Shrub	
	Deciduous Tree	
	Coniferous Tree	
MW17-1	Work Limit	
	Borehole (Loc. Approx.)	

No.	Date	Description	By
2	2023/03/17	REISSUED FOR SITE PLAN CONTROL	É.P
1	2022/08/12	ISSUED FOR SITE PLAN CONTROL	É.P

STAMPS:

DESIGNED BY

APPROVED BY

ENGINEER:

CIMA+

CLIENT:

BERTONE

PROJECT NAME:

1649 MONTREAL ROAD
MONTREAL AND BLAIR

SHEET TITLE:

TOPOGRAPHICAL PLAN

DISCIPLINE:

CIVIL

DRAFTER: S.C. POGGIOLI	SCALE: 1:250
DESIGNER: É. POTVIN	DATE: 22/08/31
APPROVER: C.L. LEBEL	CITY APPLICATION No: D07-12-22-0132
PROJECT No: A001101	DRAWING No: C001
SHEET No: 1 of 13	

NOTE OF CAUTION

THE GEODETIC COORDINATES OF EVERY ITEM INCLUDED AS PART OF THIS DOCUMENT ARE IN **NAD83 - ORIGINAL / MTM -** REFERENCE SYSTEM AND HAVE NO LEGAL VALUE. THE SITE LAYOUT MUST BE COMPLETED USING THE OFFICIAL BENCHMARKS OF AN ACCREDITED LAND SURVEYOR IN THE **NAD83 - ORIGINAL / MTM -** REFERENCE SYSTEM.

THE UNDERGROUND FEATURES AND INFORMATION THAT APPEAR ON THE DRAWINGS WERE OBTAINED FROM THE PUBLIC UTILITY COMPANIES AND/OR FROM THE CITY EACH RESPECTIVELY.

ALL INFORMATION UNDER THE LEGEND 'EXISTING' IS FOR INFORMATION ONLY. COMPLETE OR EXACT LOCATION AND ELEVATION OF UNDERGROUND SERVICES ARE NOT GUARANTEED.

CERTAIN UNDERGROUND FEATURES ON PRIVATE PROPERTY ARE NOT SHOWN ON THE CURRENT DRAWING.

ANYONE WHO PROCEEDS WITH EXCAVATION WORK SHALL VERIFY THE EXACT LOCATION OF ALL UNDERGROUND FEATURES, BY EXPLORATORY EXCAVATIONS, AND SHALL ASSUME FULL RESPONSIBILITY IF THERE IS ANY DAMAGE THAT OCCURS DURING WORK.

THE CONTRACTOR WILL HAVE THE RESPONSIBILITY AND THE OBLIGATION TO VALIDATE, BY EXPLORATORY EXCAVATION, THE SIZE OF THE PUBLIC UTILITIES UNDERGROUND SERVICES AND TO WARN THE ENGINEER OF ANY CONFLICT WITH THE PROJECTED WORK.

TITLEBLOCK 24x36 VERT ENG 3.0
PRINT DATE: 2023/03/13 / PAPER SIZE: ISO A4 (210.00 x 297.00 MM)
PATH: \\cima.plusicima\Cima-C10\ON_Projects\A\A001000-A001499\A001101_Blair - Mill Road Towers\450\460_Civil\C001_Topo.dwg / LAYOUT: C001

TITLEBLOCK 24x36 VERT ENG 3.0

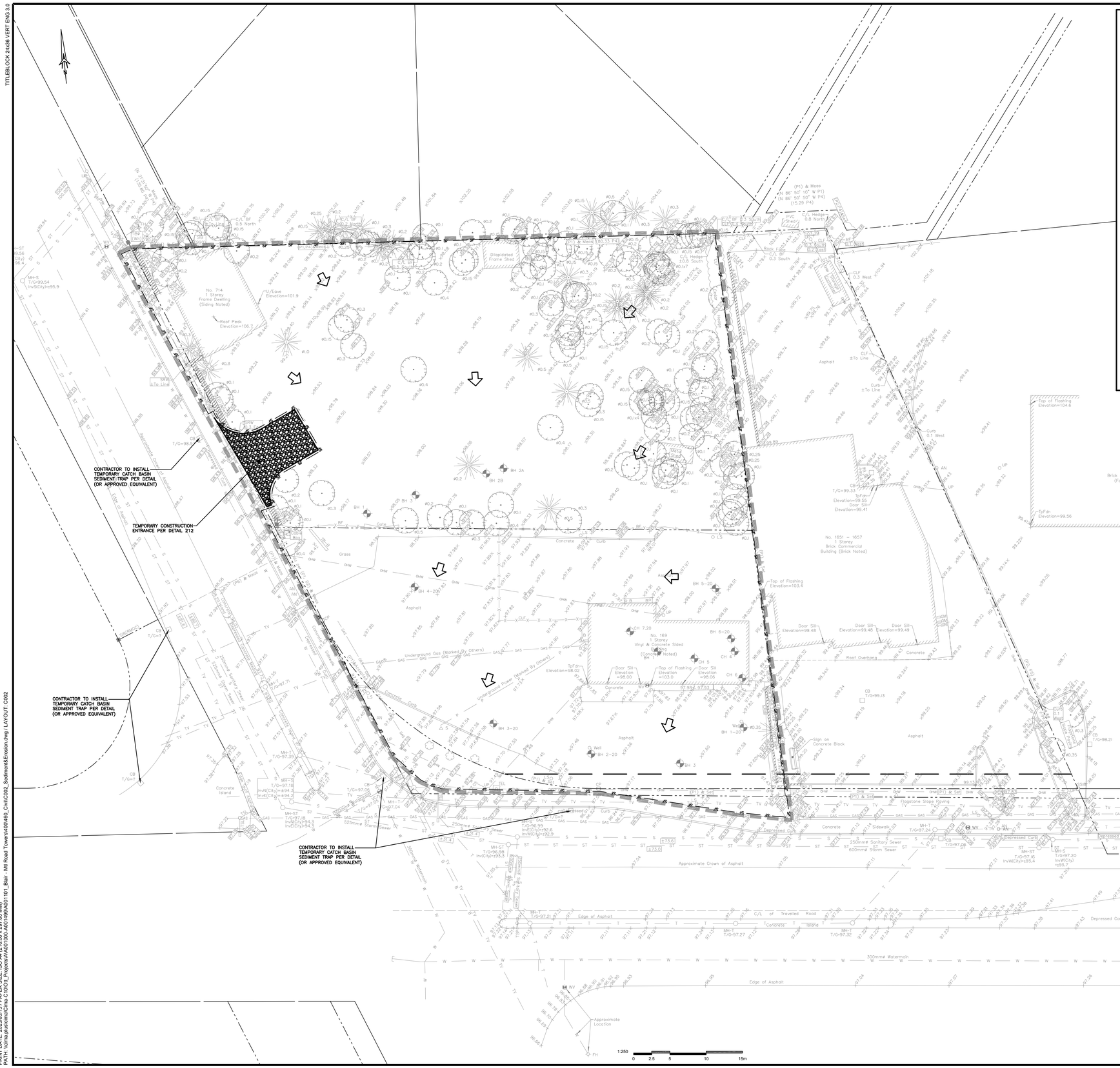

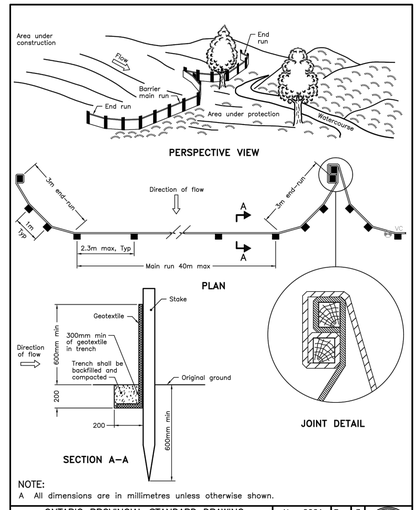

NOTE:
A All dimensions are in millimetres unless otherwise shown.

ONTARIO PROVINCIAL STANDARD DRAWING	Nov 2021	Rev 3
LIGHT–DUTY SILT FENCE BARRIER	OPSD 219.110	

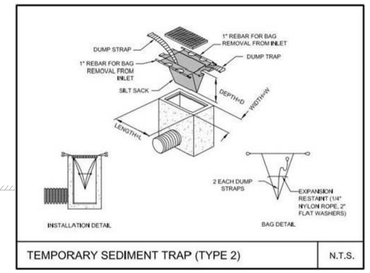

TEMPORARY SEDIMENT TRAP (TYPE 2) N.T.S.

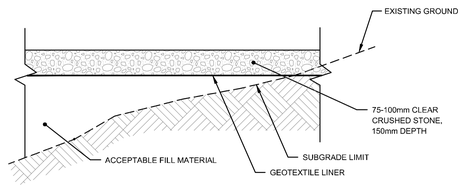

212 TYPICAL SECTION - TEMPORARY CONSTRUCTION ENTRANCE

NOTE OF CAUTION

THE GEODETIC COORDINATES OF EVERY ITEM INCLUDED AS PART OF THIS DOCUMENT ARE IN **NAD83 - ORIGINAL / MTM** - REFERENCE SYSTEM AND HAVE NO LEGAL VALUE. THE SITE LAYOUT MUST BE COMPLETED USING THE OFFICIAL BENCHMARKS OF AN ACCREDITED LAND SURVEYOR IN THE **NAD83 - ORIGINAL / MTM** - REFERENCE SYSTEM.

THE UNDERGROUND FEATURES AND INFORMATION THAT APPEAR ON THE DRAWINGS WERE OBTAINED FROM THE PUBLIC UTILITY COMPANIES AND/OR FROM THE CITY EACH RESPECTIVELY.

ALL INFORMATION UNDER THE LEGEND 'EXISTING' IS FOR INFORMATION ONLY. COMPLETE OR EXACT LOCATION AND ELEVATION OF UNDERGROUND SERVICES ARE NOT GUARANTEED.

CERTAIN UNDERGROUND FEATURES ON PRIVATE PROPERTY ARE NOT SHOWN ON THE CURRENT DRAWING.

ANYONE WHO PROCEEDS WITH EXCAVATION WORK SHALL VERIFY THE EXACT LOCATION OF ALL UNDERGROUND FEATURES, BY EXPLORATORY EXCAVATIONS, AND SHALL ASSUME FULL RESPONSIBILITY IF THERE IS ANY DAMAGE THAT OCCURS DURING WORK.

THE CONTRACTOR WILL HAVE THE RESPONSIBILITY AND THE OBLIGATION TO VALIDATE, BY EXPLORATORY EXCAVATION, THE SIZE OF THE PUBLIC UTILITIES UNDERGROUND SERVICES AND TO WARN THE ENGINEER OF ANY CONFLICT WITH THE PROJECTED WORK.

EXISTING	PROPOSED
MH–ST	Maintenance Hole (Storm)
MH–S	Maintenance Hole (Sanitary)
MH–T	Maintenance Hole (Traffic)
VC	Valve Chamber (Watermain)
ST	Underground Storm Sewer
S	Underground Sanitary Sewer
W	Underground Water
P	Underground Power
GAS	Underground Gas
B	Underground Bell
TV	Underground Cable
OHW	Overhead Wires
UP	Utility Pole
AN	Anchor
LS	Light Standard
CB	Catch Basin
FH	Fire Hydrant
WV	Water Valve
GV	Gas Valve
GM	Gas Meter
TB–B	Bell Terminal Box
SP	Traffic Signal Post
SL	Traffic Light
B	Bollard
S	Sign
	Gate
TEL	Telephone Booth
ø	Diameter
CLF	Chain Link Fence
BF	Board Fence
MF	Metal Fence
CRW	Concrete Retaining Wall
SRW	Stone Retaining Wall
Inv.	Invert
T/G	Top of Grate
U/Eave	Underside of Eave
TpFdn	Top of Foundation
C/L	Centreline
+65.00	Location of Elevations
+65.00	Top of Concrete Curb/Retaining Wall Elevation
	Property Line
	Easement
	Shrub
	Deciduous Tree
	Coniferous Tree
	Work Limit
MW17–1	Borehole (Loc. Approx.)
	Silt Fence Per OPSD 219.110 — SF —
	Overland Flow
	Temporary Construction Entrance

No.	Date	Description	By
2	2023/03/17	REISSUED FOR SITE PLAN CONTROL	É.P
1	2022/08/12	ISSUED FOR SITE PLAN CONTROL	É.P

STAMPS:

LICENSED PROFESSIONAL ENGINEER — J.M. E. POTVIN — 100208490 — March 17, 2023 — PROVINCE OF ONTARIO

DESIGNED BY — APPROVED BY

ENGINEER: CIMA+

CLIENT: BERTONE

PROJECT NAME:
1649 MONTREAL ROAD
MONTREAL AND BLAIR

SHEET TITLE:
SEDIMENT EROSION AND CONTROL PLAN

DISCIPLINE: CIVIL

DRAFTER: S.C. POGGIOLI	SCALE: 1:250
DESIGNER: É. POTVIN	DATE: 22/08/31
APPROVER: C.L. LEBEL	CITY APPLICATION No: D07-12-22-0132
PROJECT No: A001101	DRAWING No: C002
SHEET No: 1 of 13	

PRINT DATE: 2023/03/13 / PAPER SIZE: ISO A4 (210.00 x 297.00 MM)
PATH: \\cima.plus\cima\Cima-C10\Ot_Projects\A\A001000-A001499\A001101_Blair - Mtl Road Towers\400\400_Civil\C002_Sediment&Erosion.dwg / LAYOUT: C002

TITLEBLOCK 24x36 \VERT ENG 3.0

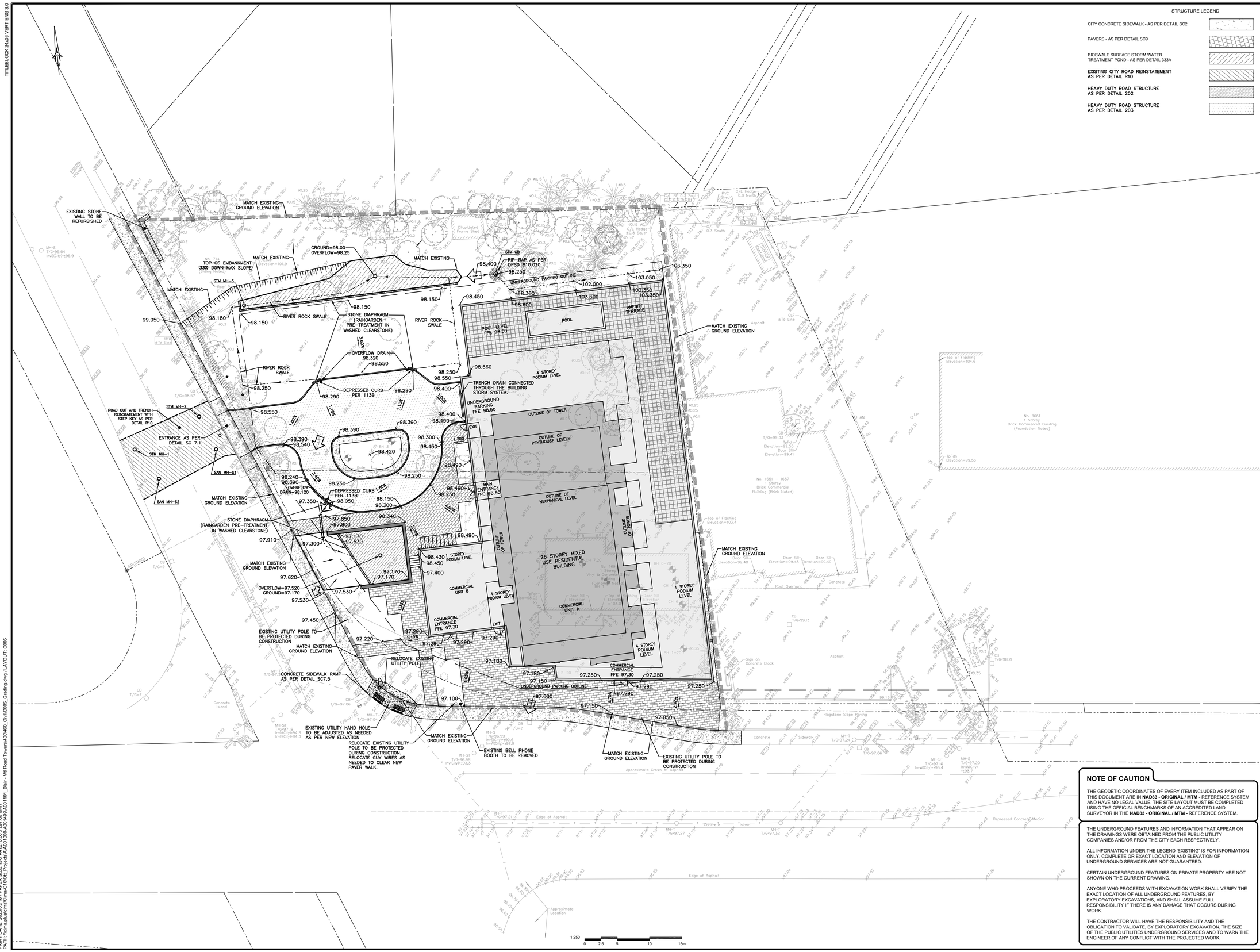

STRUCTURE LEGEND

- CITY CONCRETE SIDEWALK - AS PER DETAIL SC2
- PAVERS - AS PER DETAIL SC9
- BIOSWALE SURFACE STORM WATER TREATMENT POND - AS PER DETAIL 333A
- EXISTING CITY ROAD REINSTATEMENT AS PER DETAIL R10
- HEAVY DUTY ROAD STRUCTURE AS PER DETAIL 202
- HEAVY DUTY ROAD STRUCTURE AS PER DETAIL 203

EXISTING		PROPOSED
MH-ST	Maintenance Hole (Storm)	
MH-S	Maintenance Hole (Sanitary)	
MH-T	Maintenance Hole (Traffic)	
VC	Valve Chamber (Watermain)	
ST	Underground Storm Sewer	
S	Underground Sanitary Sewer	
W	Underground Water	
P	Underground Power	
GAS	Underground Gas	
B	Underground Bell	
TV	Underground Cable	
OHW	Overhead Wires	
UP	Utility Pole	
AN	Anchor	
LS	Light Standard	
CB	Catch Basin	
FH	Fire Hydrant	
WV	Water Valve	
GV	Gas Valve	
GM	Gas Meter	
TB-B	Bell Terminal Box	
SP	Traffic Signal Post	
SL	Traffic Light	
B	Bollard	
S	Sign	
	Gate	
TEL	Telephone Booth	
ø	Diameter	
CLF	Chain Link Fence	
BF	Board Fence	
MF	Metal Fence	
CRW	Concrete Retaining Wall	
SRW	Stone Retaining Wall	
Inv.	Invert	
T/G	Top of Grate	
U/Eave	Underside of Eave	
TpFdn	Top of Foundation	
C/L	Centreline	
+65.00	Location of Elevations	+ 99,000
+65.00	Top of Concrete Curb / Retaining Wall Elevation	
	Drainage Direction	
	Property Line	
	Easement	
	Concrete Curb	
	Depressed Concrete Curb	
	Retaining Wall	
	Shrub	
	Deciduous Tree	
	Coniferous Tree	
	Work Limit	
MW17-1	Borehole (Loc. Approx.)	
	Overland Flow	

1:250 0 2.5 5 10 15m

No.	Date	Description	By
2	2023/03/17	REISSUED FOR SITE PLAN CONTROL	É.P
1	2022/08/12	ISSUED FOR SITE PLAN CONTROL	É.P

STAMPS:

LICENSED PROFESSIONAL ENGINEER
J. M. E. POTVIN
100208490
March 17, 2023
PROVINCE OF ONTARIO

DESIGNED BY | APPROVED BY

ENGINEER: CIMA+

CLIENT: BERTONE

PROJECT NAME:

1649 MONTREAL ROAD
MONTREAL AND BLAIR

SHEET TITLE:

GRADE CONTROL AND DRAINAGE PLAN

DISCIPLINE: CIVIL

DRAFTER: S.C. POGGIOLI	SCALE: 1:250
DESIGNER: É. POTVIN	DATE: 22/08/31
APPROVER: C.L. LEBEL	CITY APPLICATION No: D07-12-22-0132
PROJECT No: A001101	DRAWING No: C005
SHEET No: 6 of 14	

NOTE OF CAUTION

THE GEODETIC COORDINATES OF EVERY ITEM INCLUDED AS PART OF THIS DOCUMENT ARE IN **NAD83 - ORIGINAL / MTM** - REFERENCE SYSTEM AND HAVE NO LEGAL VALUE. THE SITE LAYOUT MUST BE COMPLETED USING THE OFFICIAL BENCHMARKS OF AN ACCREDITED LAND SURVEYOR IN THE **NAD83 - ORIGINAL / MTM** - REFERENCE SYSTEM.

THE UNDERGROUND FEATURES AND INFORMATION THAT APPEAR ON THE DRAWINGS WERE OBTAINED FROM THE PUBLIC UTILITY COMPANIES AND/OR FROM THE CITY EACH RESPECTIVELY.

ALL INFORMATION UNDER THE LEGEND 'EXISTING' IS FOR INFORMATION ONLY. COMPLETE OR EXACT LOCATION AND ELEVATION OF UNDERGROUND SERVICES ARE NOT GUARANTEED.

CERTAIN UNDERGROUND FEATURES ON PRIVATE PROPERTY ARE NOT SHOWN ON THE CURRENT DRAWING.

ANYONE WHO PROCEEDS WITH EXCAVATION WORK SHALL VERIFY THE EXACT LOCATION OF ALL UNDERGROUND FEATURES, BY EXPLORATORY EXCAVATIONS, AND SHALL ASSUME FULL RESPONSIBILITY IF THERE IS ANY DAMAGE THAT OCCURS DURING WORK.

THE CONTRACTOR WILL HAVE THE RESPONSIBILITY AND THE OBLIGATION TO VALIDATE, BY EXPLORATORY EXCAVATION, THE SIZE OF THE PUBLIC UTILITIES UNDERGROUND SERVICES AND TO WARN THE ENGINEER OF ANY CONFLICT WITH THE PROJECTED WORK.

PRINT DATE: 2023/03/16 / PAPER SIZE: ISO A4 (210.00 x 297.00 MM)
PATH: \\cima.plus\cima\Cima-C10\Dt_Projects\A\A001000-A001499\A001101_Blair - Mtl Road Towers\400486_Civil\C005_Grading.dwg / LAYOUT: C005

TITLEBLOCK 24x36 \VERT ENG 3.0

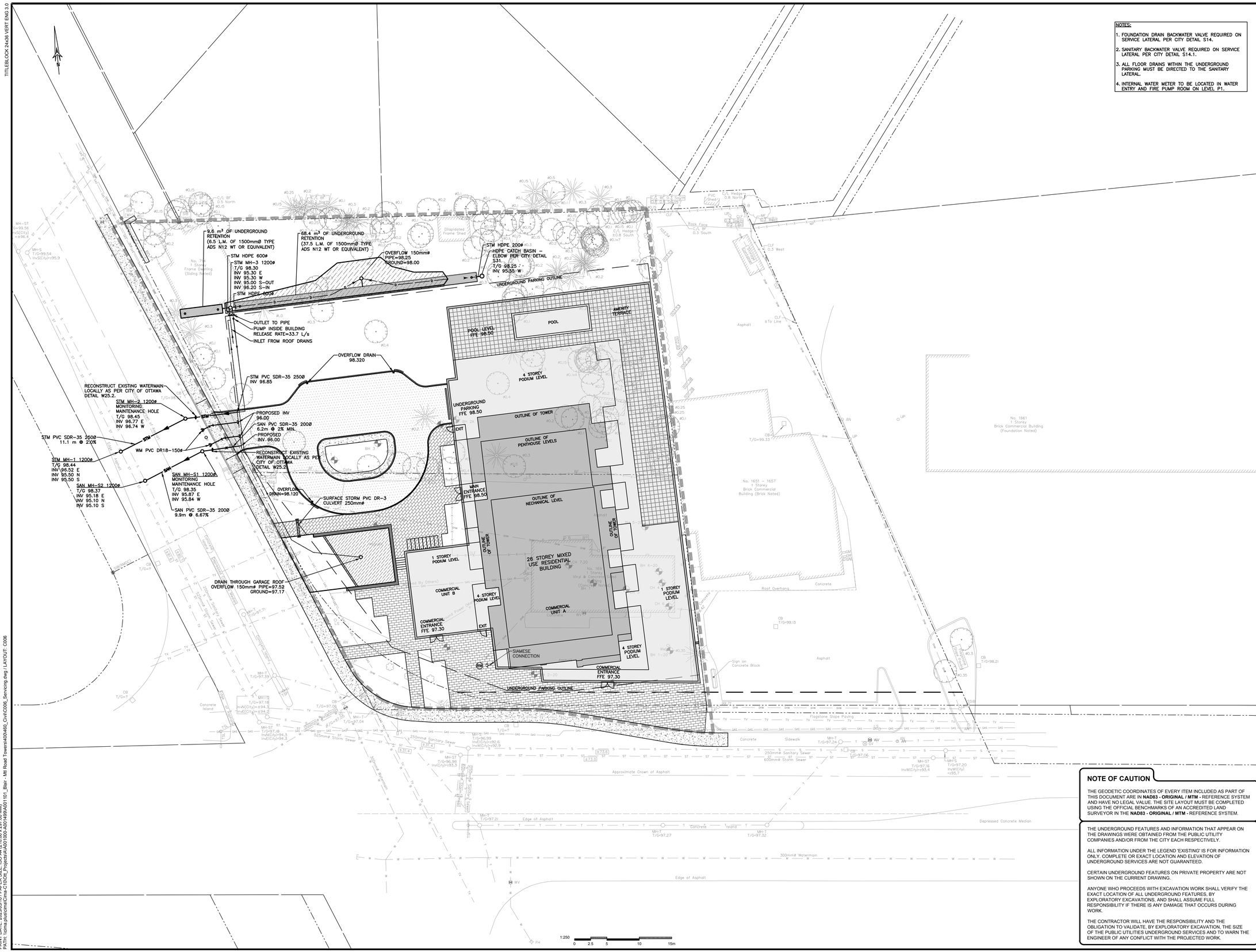

NOTES:

1. FOUNDATION DRAIN BACKWATER VALVE REQUIRED ON SERVICE LATERAL PER CITY DETAIL S14.1.
2. SANITARY BACKWATER VALVE REQUIRED ON SERVICE LATERAL PER CITY DETAIL S14.1.
3. ALL FLOOR DRAINS WITHIN THE UNDERGROUND PARKING MUST BE DIRECTED TO THE SANITARY LATERAL.
4. INTERNAL WATER METER TO BE LOCATED IN WATER ENTRY AND FIRE PUMP ROOM ON LEVEL P1.

EXISTING		PROPOSED
MH-ST	Maintenance Hole (Storm)	
MH-S	Maintenance Hole (Sanitary)	
MH-T	Maintenance Hole (Traffic)	
VC	Valve Chamber (Watermain)	
	Subdrain	D D
ST	Underground Storm Sewer	STM
S	Underground Sanitary Sewer	SAN
W	Underground Water	WM
P	Underground Power	
GAS	Underground Gas	
B	Underground Bell	
TV	Underground Cable	
OHW	Overhead Wires	
UP	Utility Pole	
AN	Anchor	
LS	Light Standard	
CB	Catch Basin	
FH	Fire Hydrant	
WV	Water Valve	
GV	Gas Valve	
GM	Gas Meter	
TB-B	Bell Terminal Box	
TSP	Traffic Signal Post	
TSL	Traffic Light	
B	Bollard	
S	Sign	
	Gate	
TEL	Telephone Booth	
ø	Diameter	
CLF	Chain Link Fence	
BF	Board Fence	
MF	Metal Fence	
CRW	Concrete Retaining Wall	
SRW	Stone Retaining Wall	
Inv.	Invert	
T/G	Top of Grate	
U/Eave	Underside of Eave	
Tp/Fdn	Top of Foundation	
C/L	Centreline	
+65.00	Location of Elevations	
+65.00	Top of Concrete Curb/Retaining Wall Elevation	
	Drainage Direction	
	Property Line	
	Easement	
	Retaining Wall	
	Shrub	
	Deciduous Tree	
	Coniferous Tree	
	Work Limit	
MW17-1	Borehole (Loc. Approx.)	
	Sewer / Watermain Insulation	
	Bioswale Surface Storm Water Treatment Pond	
	Remote Water Metering Reading Device	RM
	Internal Water Meter	M
	Fire Department (Siamese) Connection	

1:250
0 2.5 5 10 15m

No.	Date	Description	By
2	2023/03/17	REISSUED FOR SITE PLAN CONTROL	É.P
1	2022/08/12	ISSUED FOR SITE PLAN CONTROL	É.P

STAMPS:

LICENSED PROFESSIONAL ENGINEER
J. M. E. POTVIN
100208490
March 17, 2023
PROVINCE OF ONTARIO

DESIGNED BY — APPROVED BY

ENGINEER:

CIMA+

CLIENT:

BERTONE

PROJECT NAME:

1649 MONTREAL ROAD
MONTREAL AND BLAIR

SHEET TITLE:

SITE SERVICING PLAN

DISCIPLINE:

CIVIL

DRAFTER: S.C. POGGIOLI	SCALE: 1:250
DESIGNER: É. POTVIN	DATE: 22/08/31
APPROVER: C.L. LEBEL	CITY APPLICATION No: D07-12-22-0132
PROJECT No: A001101	DRAWING No: C006
SHEET No: 6 of 14	

NOTE OF CAUTION

THE GEODETIC COORDINATES OF EVERY ITEM INCLUDED AS PART OF THIS DOCUMENT ARE IN **NAD83 - ORIGINAL / MTM -** REFERENCE SYSTEM AND HAVE NO LEGAL VALUE. THE SITE LAYOUT MUST BE COMPLETED USING THE OFFICIAL BENCHMARKS OF AN ACCREDITED LAND SURVEYOR IN THE **NAD83 - ORIGINAL / MTM -** REFERENCE SYSTEM.

THE UNDERGROUND FEATURES AND INFORMATION THAT APPEAR ON THE DRAWINGS WERE OBTAINED FROM THE PUBLIC UTILITY COMPANIES AND/OR FROM THE CITY EACH RESPECTIVELY.

ALL INFORMATION UNDER THE LEGEND 'EXISTING' IS FOR INFORMATION ONLY. COMPLETE OR EXACT LOCATION AND ELEVATION OF UNDERGROUND SERVICES ARE NOT GUARANTEED.

CERTAIN UNDERGROUND FEATURES ON PRIVATE PROPERTY ARE NOT SHOWN ON THE CURRENT DRAWING.

ANYONE WHO PROCEEDS WITH EXCAVATION WORK SHALL VERIFY THE EXACT LOCATION OF ALL UNDERGROUND FEATURES, BY EXPLORATORY EXCAVATIONS, AND SHALL ASSUME FULL RESPONSIBILITY IF THERE IS ANY DAMAGE THAT OCCURS DURING WORK.

THE CONTRACTOR WILL HAVE THE RESPONSIBILITY AND THE OBLIGATION TO VALIDATE, BY EXPLORATORY EXCAVATION, THE SIZE OF THE PUBLIC UTILITIES UNDERGROUND SERVICES AND TO WARN THE ENGINEER OF ANY CONFLICT WITH THE PROJECTED WORK.

PRINT DATE: 2023/03/16 | PAPER SIZE: ISO A4 (210.00 x 297.00 MM)
PATH: \\cima.plus\cima\Cima-C10\Ot_Projects\A\A001000-A001499\A001101_Blair - Mtl Road Towers\400486_Civil\C006_Servicing.dwg / LAYOUT: C006

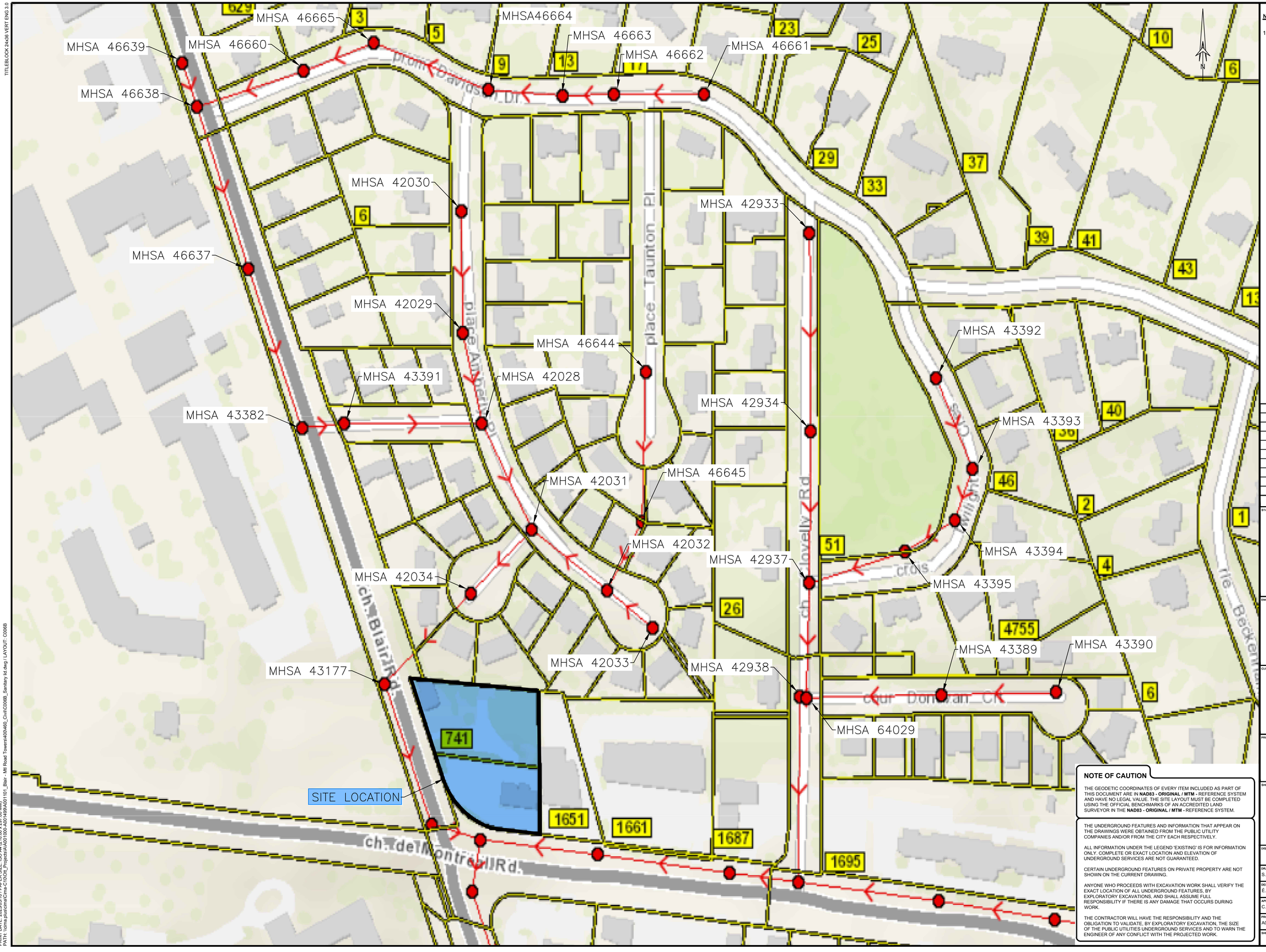

NOTES:

1. REPLACE EXISTING LIDS AND FRAMES OF THESE EXISTING SANITARY MAINTENANCE HOLES WITH WATERTIGHT LIDS AND FRAMES AS PER OPSD 401.030

1:1000
0 10 20 40 60m

No.	Date	Description	By
2	2023/03/17	REISSUED FOR SITE PLAN CONTROL	É.P
1	2022/08/12	ISSUED FOR SITE PLAN CONTROL	É.P

STAMPS:

LICENSED PROFESSIONAL ENGINEER
J. M. E. POTVIN
100208490
March 17, 2023
PROVINCE OF ONTARIO

DESIGNED BY | APPROVED BY

ENGINEER: CIMA+

CLIENT: BERTONE

PROJECT NAME:
1649 MONTREAL ROAD
MONTREAL AND BLAIR

SHEET TITLE:
SANITARY SEWER LID REPLACEMENTS

DISCIPLINE: CIVIL

DRAFTER: S.C. POGGIOLI	SCALE: 1:1000
DESIGNER: É. POTVIN	DATE: 22/08/31
APPROVER: C.L. LEBEL	CITY APPLICATION No: D07-12-22-0132
PROJECT No: A001101	DRAWING No: C006B
SHEET No: 7 of 13	

NOTE OF CAUTION

THE GEODETIC COORDINATES OF EVERY ITEM INCLUDED AS PART OF THIS DOCUMENT ARE IN **NAD83 - ORIGINAL / MTM -** REFERENCE SYSTEM AND HAVE NO LEGAL VALUE. THE SITE LAYOUT MUST BE COMPLETED USING THE OFFICIAL BENCHMARKS OF AN ACCREDITED LAND SURVEYOR IN THE **NAD83 - ORIGINAL / MTM -** REFERENCE SYSTEM.

THE UNDERGROUND FEATURES AND INFORMATION THAT APPEAR ON THE DRAWINGS WERE OBTAINED FROM THE PUBLIC UTILITY COMPANIES AND/OR FROM THE CITY EACH RESPECTIVELY.

ALL INFORMATION UNDER THE LEGEND 'EXISTING' IS FOR INFORMATION ONLY. COMPLETE OR EXACT LOCATION AND ELEVATION OF UNDERGROUND SERVICES ARE NOT GUARANTEED.

CERTAIN UNDERGROUND FEATURES ON PRIVATE PROPERTY ARE NOT SHOWN ON THE CURRENT DRAWING.

ANYONE WHO PROCEEDS WITH EXCAVATION WORK SHALL VERIFY THE EXACT LOCATION OF ALL UNDERGROUND FEATURES, BY EXPLORATORY EXCAVATIONS, AND SHALL ASSUME FULL RESPONSIBILITY IF THERE IS ANY DAMAGE THAT OCCURS DURING WORK.

THE CONTRACTOR WILL HAVE THE RESPONSIBILITY AND THE OBLIGATION TO VALIDATE, BY EXPLORATORY EXCAVATION, THE SIZE OF THE PUBLIC UTILITIES UNDERGROUND SERVICES AND TO WARN THE ENGINEER OF ANY CONFLICT WITH THE PROJECTED WORK.

TITLEBLOCK 24x36 VERT ENG 3.0

PRINT DATE: 2023/03/16 / PAPER SIZE: ISO A4 (210.00 x 297.00 MM)
PATH: \\cima.plus\cima\Cima-C10\Oil_Projects\A\A001000-A001499\A001101_Blair - Mill Road Towers\400\460_Civil\C006B_Sanitary lid.dwg / LAYOUT: C006B

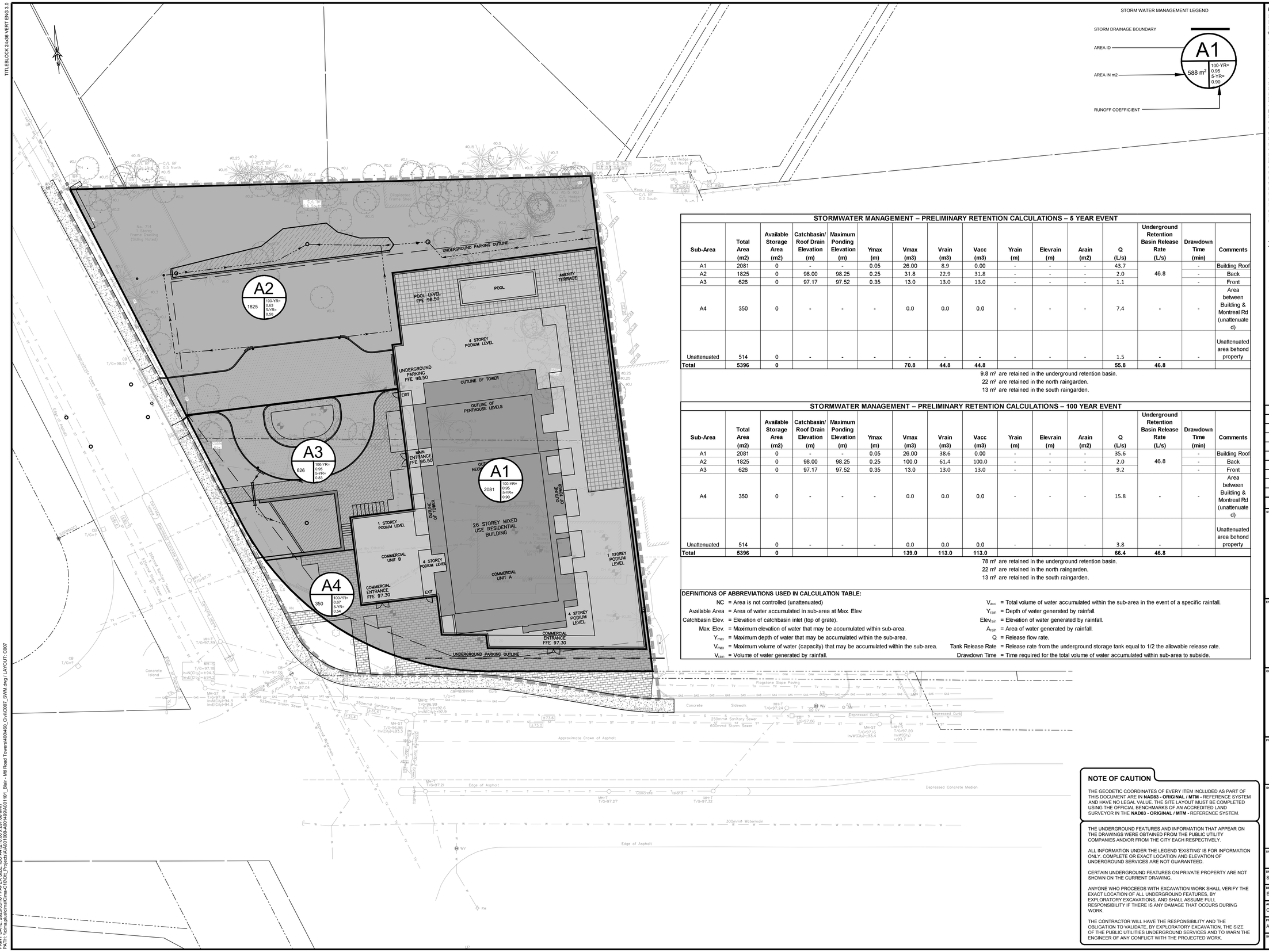

STORMWATER MANAGEMENT – PRELIMINARY RETENTION CALCULATIONS – 5 YEAR EVENT

Sub-Area	Total Area (m2)	Available Storage Area (m2)	Catchbasin/ Roof Drain Elevation (m)	Maximum Ponding Elevation (m)	Ymax (m)	Vmax (m3)	Vrain (m3)	Vacc (m3)	Yrain (m)	Elevrain (m)	Arain (m2)	Q (L/s)	Underground Retention Basin Release Rate (L/s)	Drawdown Time (min)	Comments
A1	2081	0	-	-	0.05	26.00	8.9	0.00	-	-	-	43.7	46.8	-	Building Roof
A2	1825	0	98.00	98.25	0.25	31.8	22.9	31.8	-	-	-	2.0		-	Back
A3	626	0	97.17	97.52	0.35	13.0	13.0	13.0	-	-	-	1.1		-	Front
A4	350	0	-	-	-	0.0	0.0	0.0	-	-	-	7.4	-	-	Area between Building & Montreal Rd (unattenuated)
Unattenuated	514	0	-	-	-	-	-	-	-	-	-	1.5	-	-	Unattenuated area behond property
Total	**5396**	**0**				**70.8**	**44.8**	**44.8**				**55.8**	**46.8**		

9.8 m³ are retained in the underground retention basin.
22 m³ are retained in the north raingarden.
13 m³ are retained in the south raingarden.

STORMWATER MANAGEMENT – PRELIMINARY RETENTION CALCULATIONS – 100 YEAR EVENT

Sub-Area	Total Area (m2)	Available Storage Area (m2)	Catchbasin/ Roof Drain Elevation (m)	Maximum Ponding Elevation (m)	Ymax (m)	Vmax (m3)	Vrain (m3)	Vacc (m3)	Yrain (m)	Elevrain (m)	Arain (m2)	Q (L/s)	Underground Retention Basin Release Rate (L/s)	Drawdown Time (min)	Comments
A1	2081	0	-	-	0.05	26.00	38.6	0.00	-	-	-	35.6	46.8	-	Building Roof
A2	1825	0	98.00	98.25	0.25	100.0	61.4	100.0	-	-	-	2.0		-	Back
A3	626	0	97.17	97.52	0.35	13.0	13.0	13.0	-	-	-	9.2		-	Front
A4	350	0	-	-	-	0.0	0.0	0.0	-	-	-	15.8	-	-	Area between Building & Montreal Rd (unattenuated)
Unattenuated	514	0	-	-	-	0.0	0.0	0.0	-	-	-	3.8	-	-	Unattenuated area behond property
Total	**5396**	**0**				**139.0**	**113.0**	**113.0**				**66.4**	**46.8**		

78 m³ are retained in the underground retention basin.
22 m³ are retained in the north raingarden.
13 m³ are retained in the south raingarden.

DEFINITIONS OF ABBREVIATIONS USED IN CALCULATION TABLE:

NC = Area is not controlled (unattenuated)
Available Area = Area of water accumulated in sub-area at Max. Elev.
Catchbasin Elev. = Elevation of catchbasin inlet (top of grate).
Max. Elev. = Maximum elevation of water that may be accumulated within sub-area.
Y_{max} = Maximum depth of water that may be accumulated within the sub-area.
V_{max} = Maximum volume of water (capacity) that may be accumulated within the sub-area.
V_{rain} = Volume of water generated by rainfall.
V_{acc} = Total volume of water accumulated within the sub-area in the event of a specific rainfall.
Y_{rain} = Depth of water generated by rainfall.
$Elev_{rain}$ = Elevation of water generated by rainfall.
A_{rain} = Area of water generated by rainfall.
Q = Release flow rate.
Tank Release Rate = Release rate from the underground storage tank equal to 1/2 the allowable release rate.
Drawdown Time = Time required for the total volume of water accumulated within sub-area to subside.

NOTE OF CAUTION

THE GEODETIC COORDINATES OF EVERY ITEM INCLUDED AS PART OF THIS DOCUMENT ARE IN **NAD83 - ORIGINAL / MTM -** REFERENCE SYSTEM AND HAVE NO LEGAL VALUE. THE SITE LAYOUT MUST BE COMPLETED USING THE OFFICIAL BENCHMARKS OF AN ACCREDITED LAND SURVEYOR IN THE **NAD83 - ORIGINAL / MTM -** REFERENCE SYSTEM.

THE UNDERGROUND FEATURES AND INFORMATION THAT APPEAR ON THE DRAWINGS WERE OBTAINED FROM THE PUBLIC UTILITY COMPANIES AND/OR FROM THE CITY EACH RESPECTIVELY.

ALL INFORMATION UNDER THE LEGEND 'EXISTING' IS FOR INFORMATION ONLY. COMPLETE OR EXACT LOCATION AND ELEVATION OF UNDERGROUND SERVICES ARE NOT GUARANTEED.

CERTAIN UNDERGROUND FEATURES ON PRIVATE PROPERTY ARE NOT SHOWN ON THE CURRENT DRAWING.

ANYONE WHO PROCEEDS WITH EXCAVATION WORK SHALL VERIFY THE EXACT LOCATION OF ALL UNDERGROUND FEATURES, BY EXPLORATORY EXCAVATIONS, AND SHALL ASSUME FULL RESPONSIBILITY IF THERE IS ANY DAMAGE THAT OCCURS DURING WORK.

THE CONTRACTOR WILL HAVE THE RESPONSIBILITY AND THE OBLIGATION TO VALIDATE, BY EXPLORATORY EXCAVATION, THE SIZE OF THE PUBLIC UTILITIES UNDERGROUND SERVICES AND TO WARN THE ENGINEER OF ANY CONFLICT WITH THE PROJECTED WORK.

EXISTING / PROPOSED

MH-ST Maintenance Hole (Storm)
MH-S Maintenance Hole (Sanitary)
MH-T Maintenance Hole (Traffic)
VC Valve Chamber (Watermain)
ST Underground Storm Sewer — STM
S Underground Sanitary Sewer — SAN
W Underground Water — WM
P Underground Power
GAS Underground Gas
B Underground Bell
TV Underground Cable
OHW Overhead Wires
UP Utility Pole
AN Anchor
LS Light Standard
CB Catch Basin
FH Fire Hydrant
WV Water Valve
GV Gas Valve
GM Gas Meter
TB-B Bell Terminal Box
SP Traffic Signal Post
SL Traffic Light
B Bollard
S Sign
Gate
TEL Telephone Booth
ø Diameter
CLF Chain Link Fence
BF Board Fence
MF Metal Fence
CRW Concrete Retaining Wall
SRW Stone Retaining Wall
Inv. Invert
T/G Top of Grate
U/Eave Underside of Eave
Tp/Fdn Top of Foundation
C/L Centreline
+65.00 Location of Elevations — + 99,000
+65.00 Top of Concrete Curb/Retaining Wall Elevation
Drainage Direction
Property Line
Easement
Retaining Wall
Shrub
Deciduous Tree
Coniferous Tree
Work Limit
MW17-1 Borehole (Loc. Approx.)
Sewer / Watermain Insulation
Bioswale Surface Storm Water Treatment Pond
Remote Water Metering Reading Device — RM
Internal Water Meter — M
Fire Department (Siamese) Connection

1:200 — 0 2 4 8 12m

No.	Date	Description	By
2	2023/03/17	REISSUED FOR SITE PLAN CONTROL	É.P
1	2022/08/12	ISSUED FOR SITE PLAN CONTROL	É.P

STAMPS:

LICENSED PROFESSIONAL ENGINEER — J. M. E. POTVIN — 100208490 — March 17, 2023 — PROVINCE OF ONTARIO

DESIGNED BY — APPROVED BY

ENGINEER: CIMA+

CLIENT: BERTONE

PROJECT NAME:
1649 MONTREAL ROAD
MONTREAL AND BLAIR

SHEET TITLE:
STORM WATER MANAGEMENT PLAN

DISCIPLINE: CIVIL

DRAFTER: S.C. POGGIOLI	SCALE: 1:250
DESIGNER: É. POTVIN	DATE: 22/08/31
APPROVER: C.L. LEBEL	CITY APPLICATION No: D07-12-22-0132
PROJECT No: A001101	DRAWING No: C007
SHEET No: 7 of 14	

TITLEBLOCK 24x36 \VERT ENG 3.0

PRINT DATE: 2023/03/16 / PAPER SIZE: ISO A4 (210.00 x 297.00 MM)
PATH: \\cima.plus\cima\Cima-C10\OIL_Projects\A\A001000-A001499\A001101_Blair - Mill Road Towers\400\460_Civil\C007_SWM.dwg / LAYOUT: C007

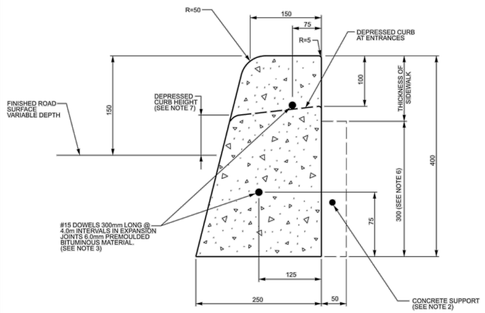

CONCRETE BARRIER CURB

NOTES:

1. THE FULL CURB DEPTH SHALL BE CARRIED THROUGH THE DEPRESSED ACCESS CROSSING.
2. A CONCRETE SUPPORT IS REQUIRED WHEN BUILT ADJACENT TO THE SIDEWALK.
3. IF AN EXTRUSION CURBING MACHINE IS USED, THE EXPANSION BITUMINOUS MATERIAL AND THE #15 DOWELS ARE TO BE PLACED AT THE END OF THE EXTRUSION.
4. ALL DIMENSIONS ARE IN MILLIMETRES UNLESS SHOWN OTHERWISE.
5. DUMMY JOINTS SHALL BE 25mm DEEP, FRONT, BACK AND TOP OF SECTION AT 4m SPACING OR MATCH JOINTING WHERE SIDEWALK IS ADJACENT.
6. FOR DEPRESSED CURB AT ENTRANCES USE 250.
7. DEPRESSED CURB HEIGHT - FOR PEDESTRIAN CURB RAMPS 0 TO 6 mm AND FOR PRIVATE ENTRANCES 0 TO 13mm.

N.T.S.

Ottawa	CONCRETE BARRIER CURB FOR GRANULAR BASE PAVEMENT (MODIFIED OPSD-600.110)	DATE:	JANUARY 2003
		REV. DATE:	MARCH 2021
		DWG. No.:	SC1.1

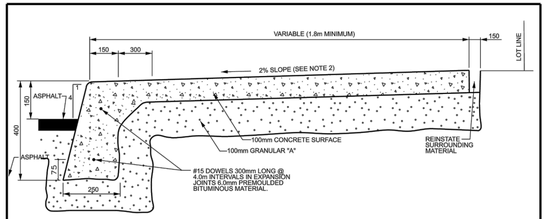

TYPICAL SIDEWALK SECTION

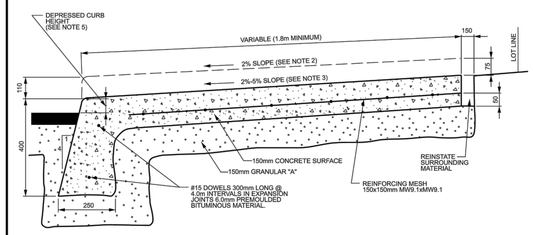

SECTION AT PRIVATE ENTRANCE AND PEDESTRIAN RAMPS

NOTES:

1. ALL DIMENSIONS ARE IN MILLIMETRES UNLESS SHOWN OTHERWISE.
2. THE MAXIMUM SLOPE IS NOT TO EXCEED 2%.
3. FOR CURB RAMPS, SLOPE OF 2% TO 5%, MAXIMUM 8%..
4. EXPANSION AND DUMMY JOINTS AS PER SC5.
5. DEPRESSED CURB HEIGHT - FOR PEDESTRIAN CURB RAMPS 0 TO 6 mm AND FOR PRIVATE ENTRANCES 0 TO 13 mm.

N.T.S.

Ottawa	MONOLITHIC CONCRETE CURB AND SIDEWALK	DATE:	MAY 2001
		REV. DATE:	MAY 2021
		DWG. No.:	SC2

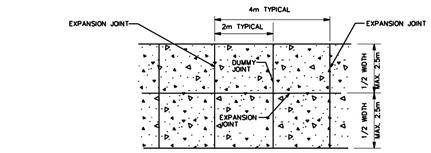

PLAN: SIDEWALK 2.5m WIDE AND OVER

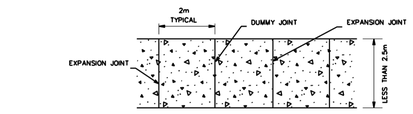

PLAN: SIDEWALK LESS THAN 2.5m WIDE

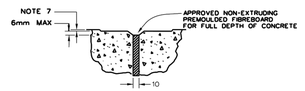

EXPANSION JOINT PROFILE

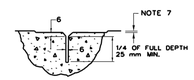

DUMMY JOINT PROFILE

NOTES:

1. EXPANSION JOINTS IN SIDEWALK SHALL BE IN LINE WITH EXPANSION JOINTS IN CURB.
2. TRANSVERSE EXPANSION JOINTS ARE REQUIRED AT THE ENDS, THE MIDPOINT, AT INTERVALS OF 4m MAXIMUM, AND ALSO TO ISOLATE OBSTRUCTIONS FROM SIDEWALK, HYDRANTS, POLES, BUILDINGS, ETC.
3. EDGES AND JOINTS ARE TO BE FINISHED WITH A 75mm EDGING TOOL.
4. ALL CONCRETE SIDEWALKS ARE TO HAVE A BROOM FINISH UNLESS OTHERWISE SPECIFIED.
5. ALL DIMENSIONS ARE IN MILLIMETRES UNLESS SHOWN OTHERWISE.
6. INSTALL DUMMY TRANSVERSE JOINTS AS REQUIRED SO THERE IS A MAXIMUM SPACING OF 2m BETWEEN ALL JOINTS.
7. SMOOTH ALL TOOLED EDGES TO A MAXIMUM DEPTH OF 1mm.

Ottawa	SIDEWALK CONSTRUCTION JOINTS	DATE:	MAY 2001
		REV. DATE:	MARCH 2016
		DWG. No.:	SC5

PLAN

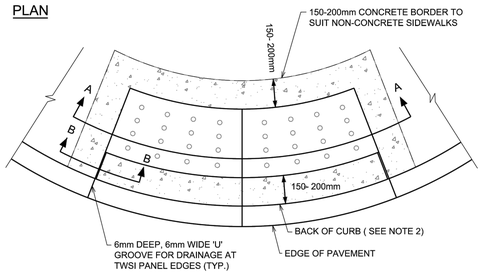

PROFILE

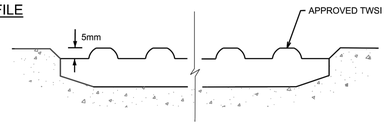

A-A

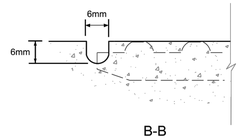

B-B

NOTES:

1. TOPS OF TWSI'S (TACTILE WALKING SURFACE INDICATOR) SHALL BE ALIGNED & LEVEL WITH THE ADJACENT CONCRETE SURFACE & INSTALLATION IN WET CONCRETE SHALL BE EFFECTIVE IN PERMANENTLY SECURING THE TWSI IN PLACE ONCE DRY.
2. FOR MONOLITHIC SIDEWALKS, TWSI SHALL BE 300 TO 350mm BACK FROM THE CURB FACE.

N.T.S.

Ottawa	TWSI DETAIL	DATE:	MARCH 2015
		REV. DATE:	MARCH 2016
		DWG. No.:	SC7.3

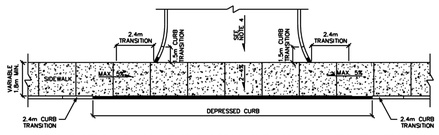

CURB RETURN AT A PRIVATE OR COMMERCIAL ENTRANCE - UNCONTROLLED INTERSECTION

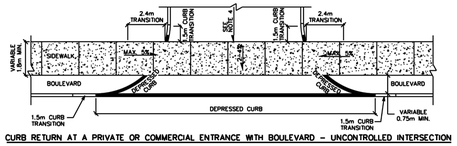

CURB RETURN AT A PRIVATE OR COMMERCIAL ENTRANCE WITH BOULEVARD - UNCONTROLLED INTERSECTION

NOTES:

1. ALL DIMENSIONS ARE IN MILLIMETRES UNLESS SHOWN OTHERWISE.
2. CURB DETAILS SEE SC1.1, SC1.2 AND SC1.3.
3. SIDEWALK DETAILS SEE SC2 AND SC3.
4. MAXIMUM SLOPE VARIES, SEE PRIVATE APPROACH BYLAW.
5. UNCONTROLLED INTERSECTION MEANS AN ENTRANCE NOT LOCATED AT A TRAFFIC SIGNAL OR ALL-WAY STOP CONTROL.

Ottawa	CURB RETURN ENTRANCES - UNCONTROLLED INTERSECTIONS	DATE:	MARCH 2007
		REV. DATE:	MARCH 2021
		DWG. No.:	SC7.1

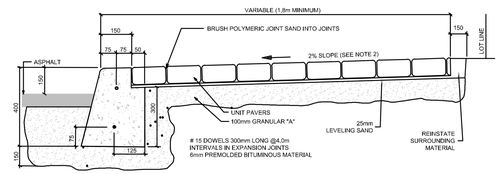

TYPICAL SIDEWALK SECTION

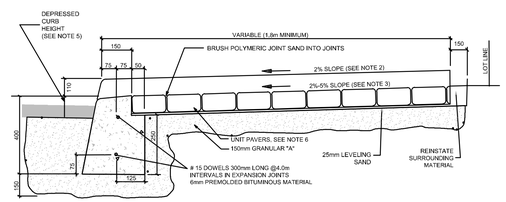

SECTION AT PEDESTRIAN RAMP

NOTES:

1. ALL MEASUREMENTS ARE IN MILLIMETRES UNLESS OTHERWISE NOTED.
2. THE MAXIMUM SLOPE IS NOT TO EXCEED 2%.
3. FOR CURB RAMP, SLOPE OF 2% TO 5%, MAXIMUM 8%.
4. EXPANSION AND DUMMY JOINTS AS PER SC5.
5. DEPRESSED CURB HEIGHT - FOR PEDESTRIAN CURB RAMPS 0 TO 6mm AND FOR PRIVATE ENTRANCES 0 TO 25mm.
6. FOR CURB RAMP REPLACE UNIT PAVERS WITH APPROVED 610 x WIDTH OF CURB RAMP (1500 MIN) TWSI, RADIUS TO MATCH CURB.
7. USE OF THIS DETAIL REQUIRES THE PRIOR APPROVAL OF THE GENERAL MANAGER.

Ottawa	TITLE: WITH UNIT PAVER SIDEWALK CONCRETE BARRIER CURB	DATE:	MAR 2007
		REV:	FEB 2016
		DWG No:	SC9.3

No.	Date	Description	By
2	2023/03/17	REISSUED FOR SITE PLAN CONTROL	E.P
1	2022/08/12	ISSUED FOR SITE PLAN CONTROL	E.P

STAMPS:

LICENSED PROFESSIONAL ENGINEER
J. M. E. POTVIN
100208490
March 17, 2023
PROVINCE OF ONTARIO

DESIGNED BY: E. POTVIN
APPROVED BY: C.L. LEBEL

ENGINEER: CIMA+

CLIENT: BERTONE

PROJECT NAME: 1649 MONTREAL ROAD MONTREAL AND BLAIR

SHEET TITLE: DETAILS PLAN

DISCIPLINE: CIVIL

DRAFTER: S.C. POGGIOLI	SCALE:
DESIGNER: E. POTVIN	DATE: 22/08/31
APPROVER: C.L. LEBEL	CITY APPLICATION No: D07-12-22-0132
PROJECT No: A001101	DRAWING No: C008
SHEET No: 9 of 14	

TITLEBLOCK 24x36 \VERT ENG 3.0

PRINT DATE: 2023/03/16 / PAPER SIZE: ISO A4 (210.00 x 297.00 MM)
PATH: \\cima.plus\cima\Cima-C\15\Ott_Projects\AA\001000-A001499\A001101_Blair - Mill Road Towers\4090460_Civil\C008\13_Details.dwg / LAYOUT: C008

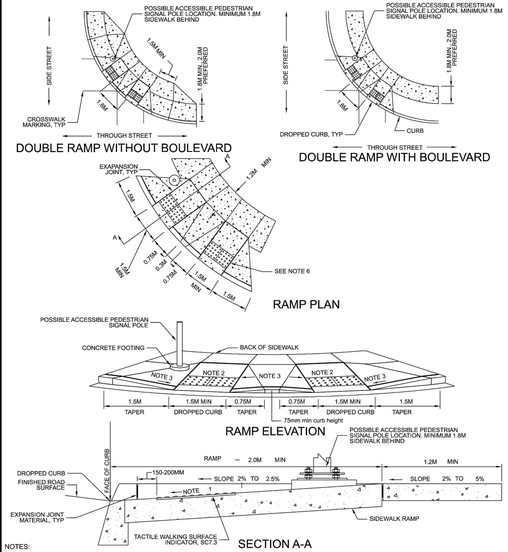

NOTES:

1. SLOPE OF RAMP SHALL NOT EXCEED 5.0%.
2. CROSS SLOPE OF RAMP SHALL NOT EXCEED 2% IN EITHER DIRECTION.
3. CROSS SLOPE OF FLARED SIDE OF RAMP SHALL BE 1:15 TO 1:10 (6.67 - 10%).
4. TRAFFIC SIGNAL DESIGN AND ACCESSIBLE PEDESTRIAN SIGNAL POLE LOCATION BY TRAFFIC OPERATIONS BRANCH.
5. ACCESSIBLE PEDESTRIAN SIGNALS SHOWN FOR ILLUSTRATION PURPOSES ONLY.
6. APPROVED 610MM X WIDTH OF CURB RAMP (1500MM MIN) TACTILE WALKING SURFACE INDICATOR, RADIUS TO MATCH CURB, DRAIN GROOVES AS PER SC7.

Ottawa	CONCRETE SIDEWALK RAMPS AT SIGNALIZED INTERSECTIONS	DATE: MARCH 2023	
		REV. DATE: --	
		DWG. No.: SC7.5	

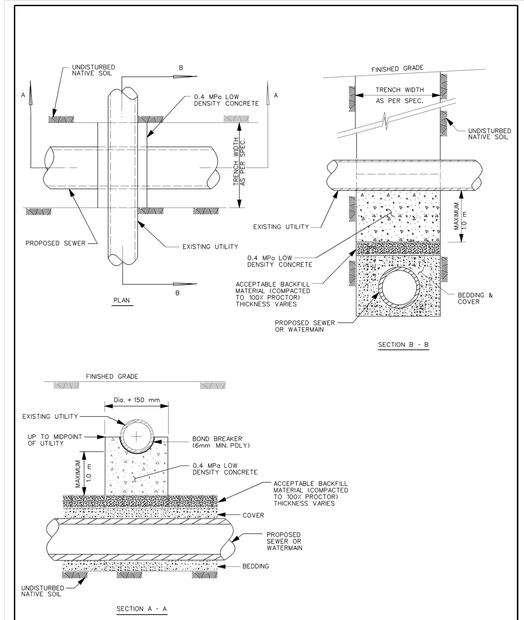

Ottawa	SUPPORT DETAIL FOR EXISTING UTILITY CROSSING SEWER OR WATERMAIN TRENCH	DATE: MAY 2001	
		REV. DATE: NONE	
		DWG. No.: S10	

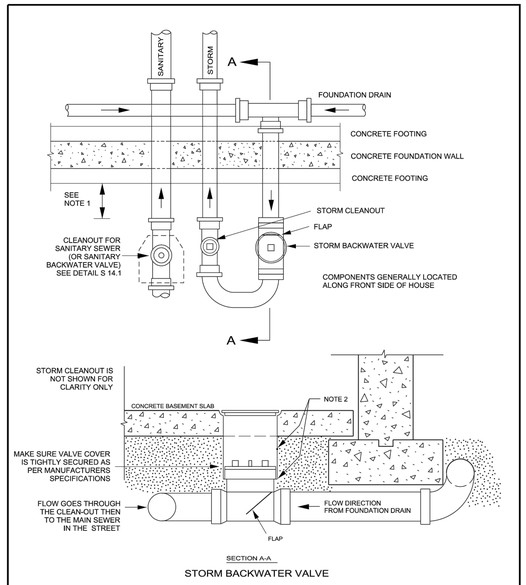

STORM BACKWATER VALVE

NOTES:

1. BACKWATER VALVE, CLEAN-OUTS AND ANY OTHER FITTINGS MUST BE INSTALLED A MINIMUM OF 300mm INSIDE OF THE BASEMENT FOOTING. THIS IS TO ENSURE THERE IS SUFFICIENT ROOM TO REPLACE THESE COMPONENTS IN THE FUTURE WITHOUT HAVING TO DAMAGE THE FOOTING/WALL DURING THE PROCESS
2. JOINTS BETWEEN THE SLEEVE AND THE BACKWATER VALVE AND THE FLOOR SHALL BE WATERTIGHT.

N.T.S.

Ottawa	FOUNDATION DRAIN BACKWATER VALVE INSTALLATION	DATE: DEC. 2002	
		REV. DATE: MARCH 2011	
		DWG. No.: S14	

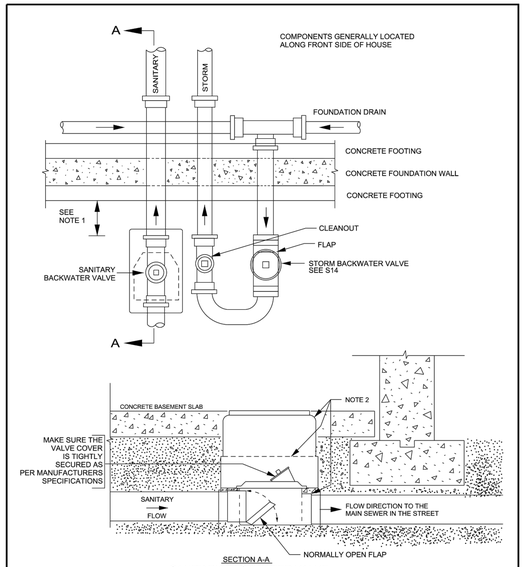

SANITARY BACKWATER VALVE

NOTES:

1. BACKWATER VALVE, CLEAN-OUTS AND ANY OTHER FITTINGS MUST BE INSTALLED A MINIMUM OF 300mm INSIDE OF THE BASEMENT FOOTING. THIS IS TO ENSURE THERE IS SUFFICIENT ROOM TO REPLACE THESE COMPONENTS IN THE FUTURE WITHOUT HAVING TO DAMAGE THE FOOTING/WALL DURING THE PROCESS
2. JOINTS BETWEEN THE ACCESS BOX SECTIONS AND THE ACCESS BOX AND THE BACKWATER VALVE AND THE FLOOR SLAB SHALL BE SEALED.

N.T.S.

Ottawa	SANITARY BACKWATER VALVE INSTALLATION TYPE 1	DATE: MARCH 2010	
		REV. DATE: MARCH 2011	
		DWG. No.: S14.1	

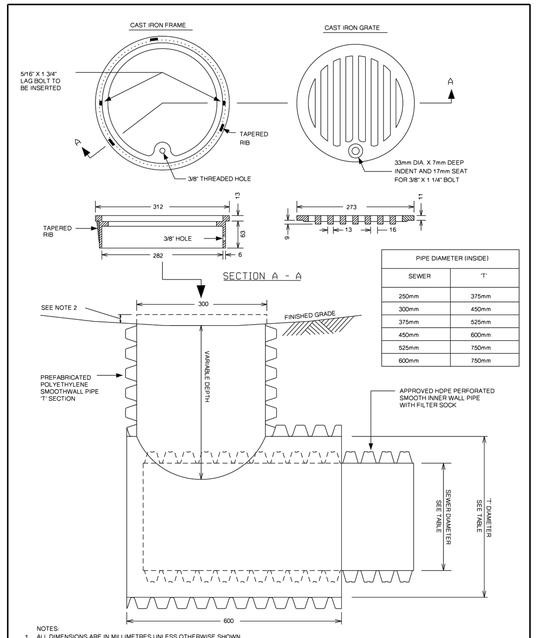

PIPE DIAMETER (INSIDE)	
SEWER	"T"
250mm	375mm
300mm	450mm
375mm	525mm
450mm	600mm
525mm	750mm
600mm	750mm

NOTES:

1. ALL DIMENSIONS ARE IN MILLIMETRES UNLESS OTHERWISE SHOWN.
2. FOR DITCHED PIPE APPLICATIONS, TOP OF CB SHALL BE MIN. 5cm ABOVE BOTTOM OF THE DITCH/SWALE AND BE LOCATED MIN. 2m FROM EDGE OF PAVEMENT.
3. WHEN NON PERFORATED PIPE IS USED, MATCH THE "T's HORIZONTAL OPENING DIAMETERS TO THE PIPE DIAMETER AND CONNECT WITH MANUFACTURER RECOMMENDED CONNECTION SLEEVE.
4. SEE MS-22.15 FOR ALTERNATE APPROVED FITTING MANUFACTURERS.

Ottawa	CATCH BASIN - ELBOW FOR REAR YARD, DITCHED PIPE AND LANDSCAPING APPLICATIONS	DATE: MARCH 2007	
		REV. DATE: MARCH 2019	
		DWG. No.: S31	

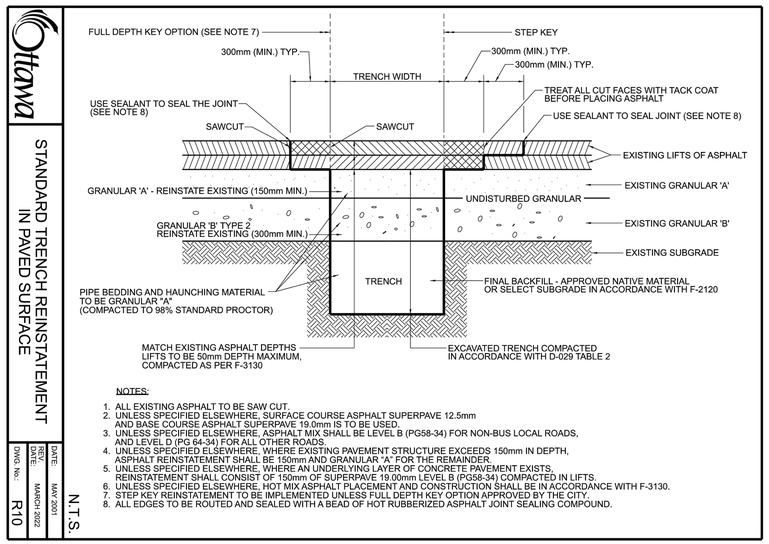

NOTES:

1. ALL EXISTING ASPHALT TO BE SAW CUT.
2. UNLESS SPECIFIED ELSEWHERE, SURFACE COURSE ASPHALT SUPERPAVE 12.5mm AND BASE COURSE ASPHALT SUPERPAVE 19.0mm IS TO BE USED.
3. UNLESS SPECIFIED ELSEWHERE, ASPHALT MIX SHALL BE LEVEL B (PG58-34) FOR NON-BUS LOCAL ROADS, AND LEVEL D (PG 64-34) FOR ALL OTHER ROADS.
4. UNLESS SPECIFIED ELSEWHERE, WHERE EXISTING PAVEMENT STRUCTURE EXCEEDS 150mm IN DEPTH, ASPHALT REINSTATEMENT SHALL BE 150mm AND GRANULAR "A" FOR THE REMAINDER.
5. UNLESS SPECIFIED ELSEWHERE, WHERE AN UNDERLYING LAYER OF CONCRETE PAVEMENT EXISTS, REINSTATEMENT SHALL CONSIST OF 150mm OF SUPERPAVE 19.00mm LEVEL B (PG58-34) COMPACTED IN LIFTS.
6. UNLESS SPECIFIED ELSEWHERE, HOT MIX ASPHALT PLACEMENT AND CONSTRUCTION SHALL BE IN ACCORDANCE WITH F-3130.
7. STEP KEY REINSTATEMENT TO BE IMPLEMENTED UNLESS FULL DEPTH KEY OPTION APPROVED BY THE CITY.
8. ALL EDGES TO BE ROUTED AND SEALED WITH A BEAD OF HOT RUBBERIZED ASPHALT JOINT SEALING COMPOUND.

Ottawa	STANDARD TRENCH REINSTATEMENT IN PAVED SURFACE	DATE: MAY 2001	
		REV. DATE: MARCH 2022	
		DWG. No.: R10	

N.T.S.

No.	Date	Description	By
2	2023/03/17	REISSUED FOR SITE PLAN CONTROL	É.P
1	2022/08/12	ISSUED FOR SITE PLAN CONTROL	É.P

STAMPS:

LICENSED PROFESSIONAL ENGINEER
J. M. E. POTVIN
100208490
March 17, 2023
PROVINCE OF ONTARIO

DESIGNED BY — APPROVED BY

ENGINEER: CIMA+

CLIENT: BERTONE

PROJECT NAME: 1649 MONTREAL ROAD MONTREAL AND BLAIR

SHEET TITLE: DETAILS PLAN

DISCIPLINE: CIVIL

DRAFTER: S.C. POGGIOLI	SCALE:
DESIGNER: É. POTVIN	DATE: 22/08/31
APPROVER: C.L. LEBEL	CITY APPLICATION No: D07-12-22-0132
PROJECT No: A001101	DRAWING No: C009
SHEET No: 10 of 14	

TITLEBLOCK 24x36 \ VERT ENG 3.0

PRINT DATE: 2023/03/16 / PAPER SIZE: ISO A4 (210.00 x 297.00 MM)
PATH: \\cima.pluscima\Cima-C10\ON_Projects\A\A001000-A001499\A001101_Blair - Mill Road Towers\400\460_Civil\C008\@13_Details.dwg / LAYOUT: C009

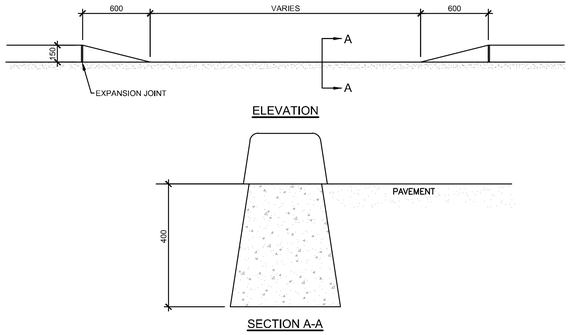

COMPLETELYDEPRESSED CONCRETE CURB 113B

AUCUNE / NTS

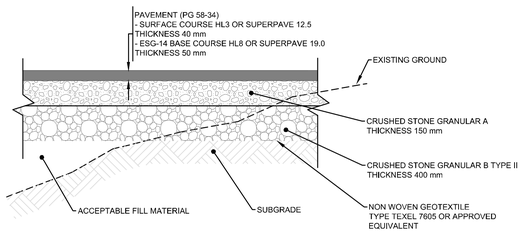

TYPICAL SECTION - GRANULAR FOUNDATION
AND ASPHALT PAVEMENT (HEAVY DUTY CIRCULATION
OUTSIDE OF UNDERGROUND PARKING AREA) 202

AUCUNE / NTS

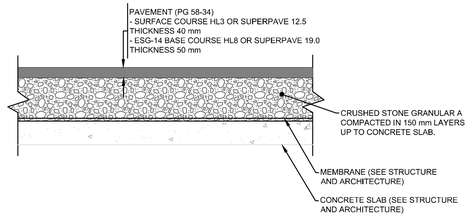

TYPICAL SECTION - GRANULAR FOUNDATION
AND ASPHALT PAVEMENT (HEAVY DUTY CIRCULATION
ABOVE UNDERGROUND PARKING AREA) 203

AUCUNE / NTS

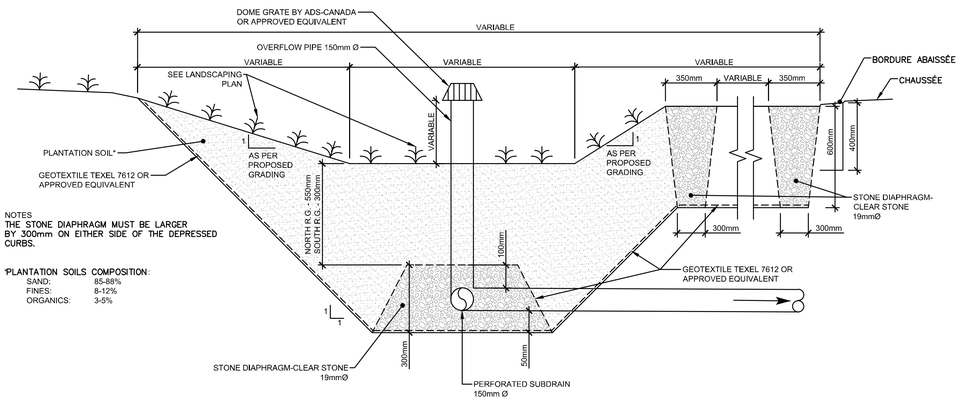

NOTES
THE STONE DIAPHRAGM MUST BE LARGER
BY 300mm ON EITHER SIDE OF THE DEPRESSED
CURBS.

*PLANTATION SOILS COMPOSITION:
SAND: 85-88%
FINES: 8-12%
ORGANICS: 3-5%

RAIN GARDEN CROSS (R.G.) SECTION 333A

NTS

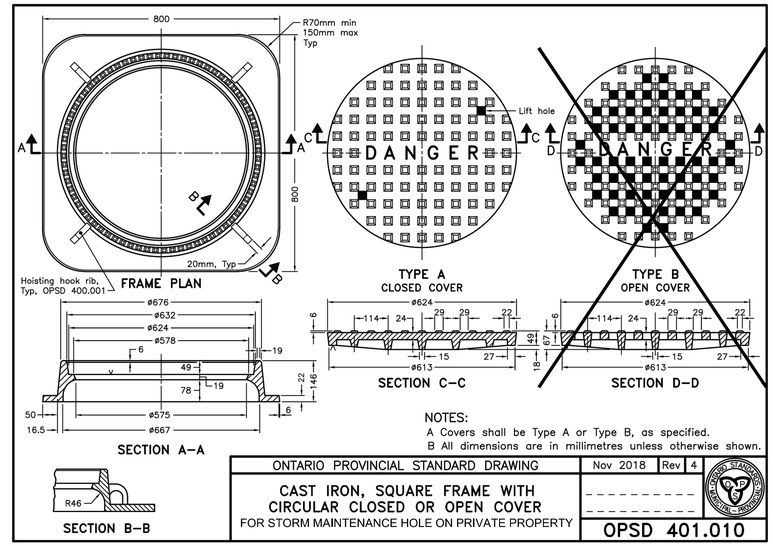

NOTES:
A Covers shall be Type A or Type B, as specified.
B All dimensions are in millimetres unless otherwise shown.

ONTARIO PROVINCIAL STANDARD DRAWING	Nov 2018	Rev 4
CAST IRON, SQUARE FRAME WITH CIRCULAR CLOSED OR OPEN COVER FOR STORM MAINTENANCE HOLE ON PRIVATE PROPERTY		OPSD 401.010

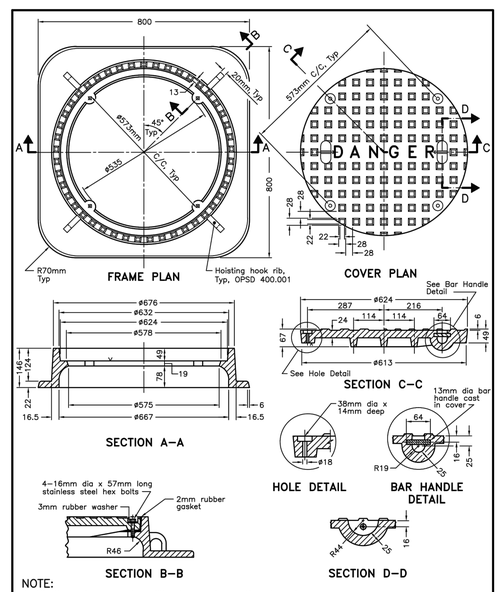

NOTE:
A All dimensions are in millimetres unless otherwise shown.

ONTARIO PROVINCIAL STANDARD DRAWING	Nov 2018	Rev 4
CAST IRON, SQUARE FRAME WITH CIRCULAR WATERTIGHT COVER FOR SANITARY MAINTENANCE HOLES		OPSD 401.030

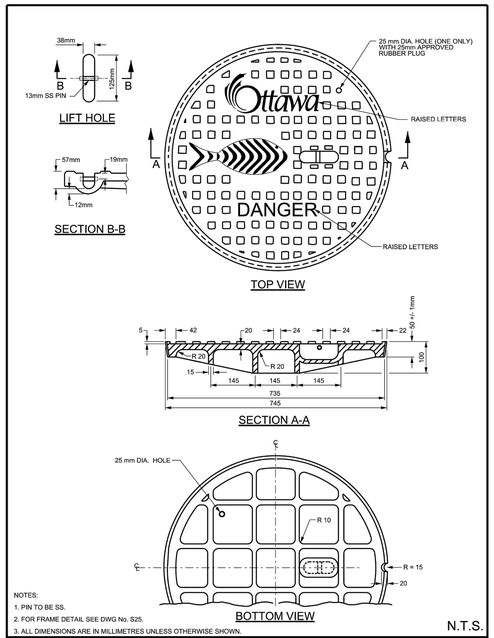

NOTES:
1. PIN TO BE SS.
2. FOR FRAME DETAIL SEE DWG No. S25.
3. ALL DIMENSIONS ARE IN MILLIMETRES UNLESS OTHERWISE SHOWN.

N.T.S.

Ottawa	STANDARD CIRCULAR STORM MAINTENANCE HOLE COVER ON CITY R.O.W.	DATE: MARCH 2010	REV. DATE: MARCH 2017	DWG. No.: S24.1

No.	Date	Description	By
2	2023/03/17	REISSUED FOR SITE PLAN CONTROL	É.P
1	2022/08/12	ISSUED FOR SITE PLAN CONTROL	É.P

STAMPS:

LICENSED PROFESSIONAL ENGINEER
J. M. E. POTVIN
100208490
March 17, 2023
PROVINCE OF ONTARIO

DESIGNED BY — APPROVED BY

ENGINEER: CIMA+

CLIENT: BERTONE

PROJECT NAME: 1649 MONTREAL ROAD MONTREAL AND BLAIR

SHEET TITLE: DETAILS PLAN

DISCIPLINE: CIVIL

DRAFTER: S.C. POGGIOLI
SCALE:
DESIGNER: É. POTVIN
DATE: 22/08/31
APPROVER: C.L. LEBEL
CITY APPLICATION No: D07-12-22-0132
PROJECT No: A001101
DRAWING No: C010
SHEET No: 11 of 14

TITLEBLOCK 24x36 \VERT ENG 3.0

PRINT DATE: 2023/03/16 / PAPER SIZE: ISO A4 (210.00 x 297.00 MM)
PATH: \\cima.plus\cima\Cima-C10\Ott_Projects\AA\001000-A001499\A001101_Blair - Mtl Road Towers\400\460_Civil\C008\B13_Details.dwg / LAYOUT: C010

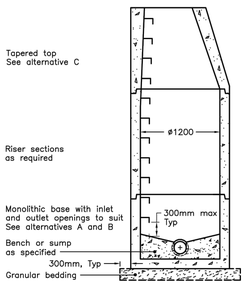

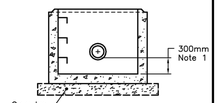

SUMP DETAIL

ALTERNATIVES

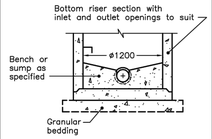

A PRECAST SLAB BASE

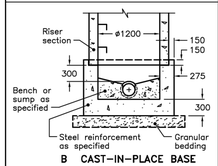

B CAST-IN-PLACE BASE

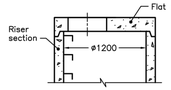

C PRECAST FLAT CAP

NOTES:
1 The sump is measured from the lowest invert.
A Granular backfill shall be placed to a minimum thickness of 300mm all around the maintenance hole.
B Precast concrete components shall be according to OPSD 701.030, 701.031, or 701.032.
C Structure exceeding 5.0m in depth shall include safety platform according to OPSD 404.020.
D Pipe support according to OPSD 708.020.
E For benching and pipe opening details, see OPSD 701.021.
F For adjustment unit and frame installation, see OPSD 704.010.
G All dimensions are nominal.
H All dimensions are in millimetres unless otherwise shown.

ONTARIO PROVINCIAL STANDARD DRAWING | Nov 2014 | Rev 5

PRECAST CONCRETE MAINTENANCE HOLE
1200mm DIAMETER

OPSD 701.010

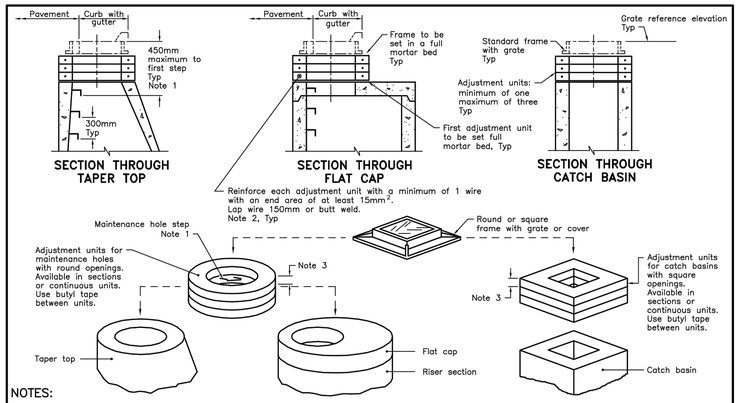

NOTES:
1 If first step is in an adjustment unit, the adjustment unit shall be of the type manufactured with a step in place.
2 Centre reinforcing in adjustment unit ±10mm.
3 Round and square adjustment units are available in sizes of 50, 75, 100, 150, and 300mm.
A Adjustment units shall not extend beyond the outside edge of the structure.
B All dimensions are in millimetres unless otherwise shown.

ONTARIO PROVINCIAL STANDARD DRAWING | Nov 2014 | Rev 3

PRECAST CONCRETE ADJUSTMENT UNITS FOR MAINTENANCE HOLES, CATCH BASINS, AND VALVE CHAMBERS

OPSD 704.010

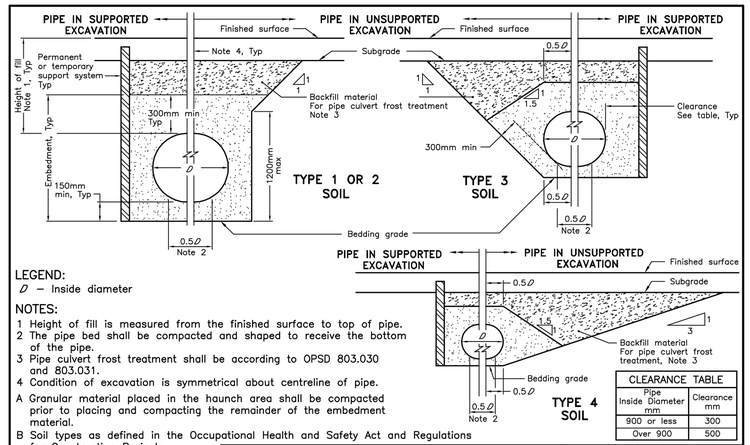

LEGEND:
D – Inside diameter

NOTES:
1 Height of fill is measured from the finished surface to top of pipe.
2 The pipe bed shall be compacted and shaped to receive the bottom of the pipe.
3 Pipe culvert frost treatment shall be according to OPSD 803.030 and 803.031.
4 Condition of excavation is symmetrical about centreline of pipe.
A Granular material placed in the haunch area shall be compacted prior to placing and compacting the remainder of the embedment material.
B Soil types as defined in the Occupational Health and Safety Act and Regulations for Construction Projects.
C All dimensions are in metres unless otherwise shown.

CLEARANCE TABLE	
Pipe Inside Diameter mm	Clearance mm
900 or less	300
Over 900	500

ONTARIO PROVINCIAL STANDARD DRAWING | Nov 2014 | Rev 3

FLEXIBLE PIPE EMBEDMENT AND BACKFILL EARTH EXCAVATION

OPSD 802.010

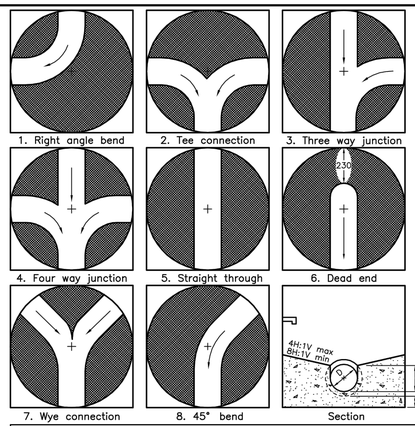

MAXIMUM SIZE HOLE IN THE WALL IN PRECAST RISER SECTIONS					
Maintenance Hole Diameter	No. 1–4	No. 5 and 6	No. 8	No.7	
				Inlet Hole	Outlet Hole
1200	700	860	780	700	860
1500	860	1220	960	860	1170
1800	1220	1485	1220	1220	1485
2400	1485	2020	1760	1485	2020
3000	1930	2450	2300	1930	2450
3600	2470	3085	2730	2470	3085

NOTES:
1 Slopes shall be maintained from the outlet hole opening for top of benching.
A Concrete for benching shall be 30MPa.
B When benching is hand–finished, it shall be given wood float finish, channel shall be given steel trowel finish.
C Benching slope and height shall be as specified.
D When specified, maintenance holes that are 1200mm in diameter with a uniform channel for 200 or 250mm pipe may be prebenched at the manufacturer with standardized benching slope and channel orientation.
E All dimensions are nominal.
F All dimensions are in millimetres unless otherwise shown.

ONTARIO PROVINCIAL STANDARD DRAWING | Nov 2014 | Rev 4

MAINTENANCE HOLE BENCHING AND PIPE OPENING ALTERNATIVES

OPSD 701.021

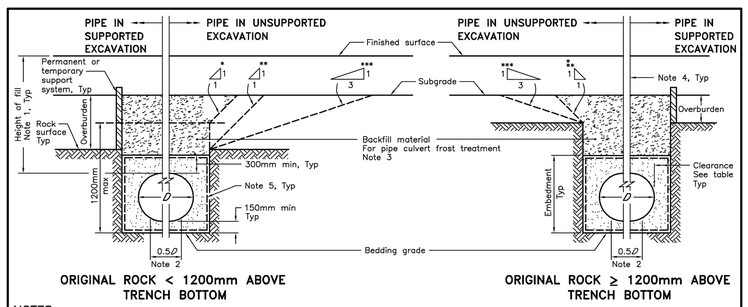

NOTES:
1 Height of fill is measured from the finished surface to top of pipe.
2 The pipe bed shall be compacted and shaped to receive the bottom of the pipe.
3 Pipe culvert frost treatment shall be according to OPSD 803.030 and 803.031.
4 Condition of excavation is symmetrical about centreline of pipe.
5 Embedment material shall be wrapped in non–woven geotextile when specified.
A Granular material placed in the haunch area shall be compacted prior to placing and compacting the remainder of the embedment material.
B Soil types as defined in the Occupational Health and Safety Act and Regulations for Construction Projects.
C Fractured rock shall be treated as Type 1 soil.
D All dimensions are in metres unless otherwise shown.

LEGEND:
D – Inside diameter
* – Type 1 or 2 soil
** – Type 3 soil
*** – Type 4 soil

CLEARANCE TABLE	
Pipe Inside Diameter mm	Clearance mm
900 or less	300
Over 900	500

ONTARIO PROVINCIAL STANDARD DRAWING | Nov 2014 | Rev 3

FLEXIBLE PIPE EMBEDMENT AND BACKFILL ROCK EXCAVATION

OPSD 802.013

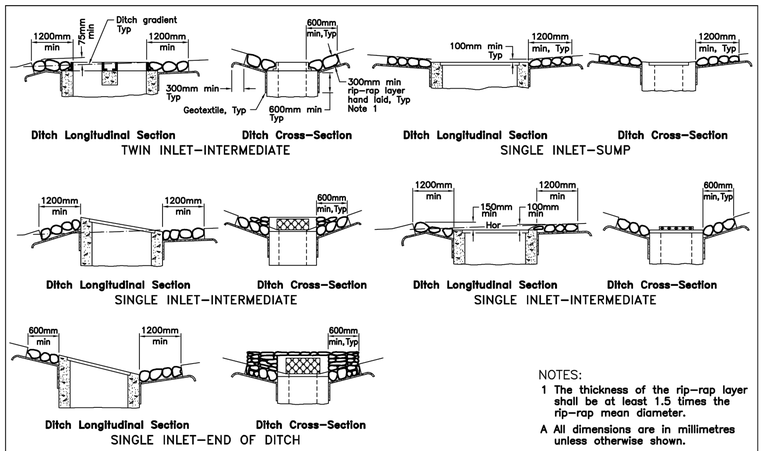

NOTES:
1 The thickness of the rip–rap layer shall be at least 1.5 times the rip–rap mean diameter.
A All dimensions are in millimetres unless otherwise shown.

ONTARIO PROVINCIAL STANDARD DRAWING | Nov 2013 | Rev 2

GENERAL RIP–RAP LAYOUT FOR DITCH INLETS

OPSD 810.020

No.	Date	Description	By
2	2023/03/17	REISSUED FOR SITE PLAN CONTROL	E.P
1	2022/08/12	ISSUED FOR SITE PLAN CONTROL	E.P

STAMPS:
LICENSED PROFESSIONAL ENGINEER
J. M. E. POTVIN
100208490
March 17, 2023
PROVINCE OF ONTARIO

DESIGNED BY | APPROVED BY

ENGINEER: CIMA+

CLIENT: BERTONE

PROJECT NAME: 1649 MONTREAL ROAD MONTREAL AND BLAIR

SHEET TITLE: DETAILS PLAN

DISCIPLINE: CIVIL

DRAFTER: S.C. POGGIOLI
SCALE:
DESIGNER: E. POTVIN
DATE: 22/08/31
APPROVER: C.L. LEBEL
CITY APPLICATION No: D07-12-22-0132
PROJECT No: A001101
DRAWING No: C011
SHEET No: 12 of 14

TITLEBLOCK 24x36 \VERT ENG 3.0

PRINT DATE: 2023/03/16 / PAPER SIZE: ISO A4 (210.00 x 297.00 MM)
PATH: \\cima.plus\cma\Cima-C10\Ott_Projects\A\A001000-A001499\A001101_Blair - Mtl Road Towers\400\460_Civil\C008\B13_Details.dwg / LAYOUT: C011

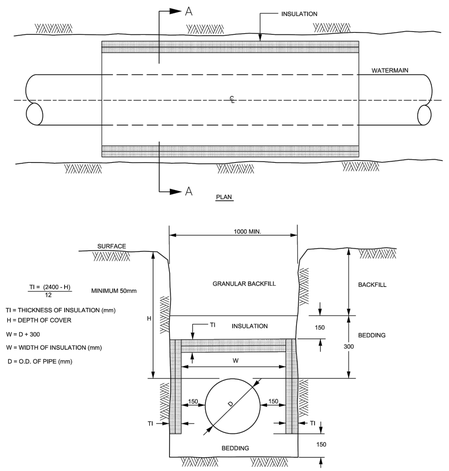

SECTION A - A

NOTES

FOR 150 - 400mm (NOMINAL DIAMETER) WATERMAINS, WHERE THE DEPTH OF COVER IS LESS THAN 2400mm

1. INCREMENTS OF THICKNESS SHALL BE ADJUSTABLE TO 25mm.
2. IN PROXIMITY OF MAINTENANCE HOLES, CULVERTS, CATCHBASINS, ETC., INSULATION SHALL BE PLACED PER DETAIL W23
3. DEPTH OF COVER LESS THAN 1200mm REQUIRES SPECIAL DESIGN
4. STAGGER JOINTS OF MULTIPLE SHEETS.
5. ALL DIMENSIONS ARE IN MILLIMETRES UNLESS SHOWN OTHERWISE.

Ottawa

THERMAL INSULATION FOR WATERMAINS IN SHALLOW TRENCHES

DATE:	MAY 2001
REV. DATE:	MARCH 2013
DWG. No.:	W22

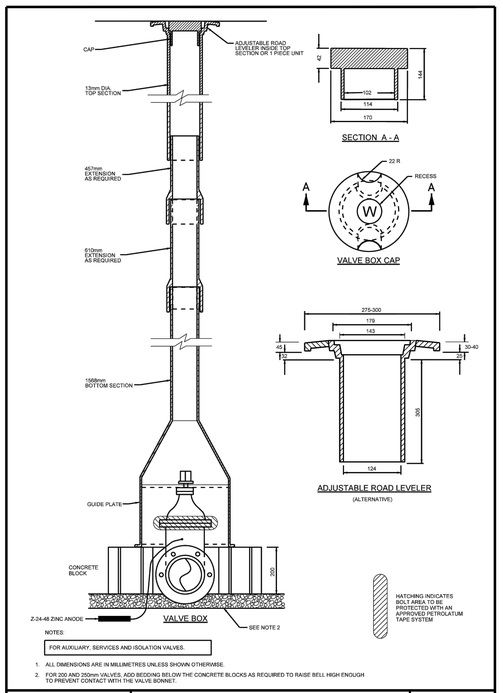

NOTES:

FOR AUXILIARY, SERVICES AND ISOLATION VALVES.

1. ALL DIMENSIONS ARE IN MILLIMETRES UNLESS SHOWN OTHERWISE.
2. FOR 200 AND 250mm VALVES, ADD BEDDING BELOW THE CONCRETE BLOCKS AS REQUIRED TO RAISE BELL HIGH ENOUGH TO PREVENT CONTACT WITH THE VALVE BONNET.

Ottawa

VALVE BOX ASSEMBLY

DATE:	MAY 2001
REV. DATE:	MARCH 2021
DWG. No.:	W24

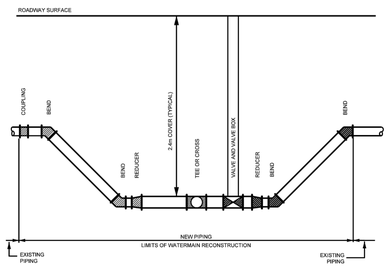

NOTES:

1. FOR 300mm OR GREATER DIAMETER WATERMAIN, BENDS SHALL BE MAXIMUM 22⌀.
2. INSULATION PER W22 AT EXISTING WATERMAIN.
3. REFER TO W25.6 FOR RESTRAINED LENGTH REQUIREMENTS.
4. REFER TO W25.3 AND W25.4 FOR THRUST BLOCK REQUIREMENTS.
5. ALL DIMENSIONS ARE IN MILLIMETRES UNLESS SHOWN OTHERWISE.
6. CATHODIC PROTECTION MEASURES SHALL BE INSTALLED IN ACCORDANCE WITH W39, W40, AND W42.
7. TRACER WIRE REQUIRED FOR PVC, PEX AND HDPE WATERMAIN PIPE ONLY AS PER W36.

Ottawa

TYPICAL CONNECTION DETAIL FROM NEW TO EXISTING WATERMAIN

DATE:	MAY 2001
REV. DATE:	MARCH 2021
DWG. No.:	W25.1

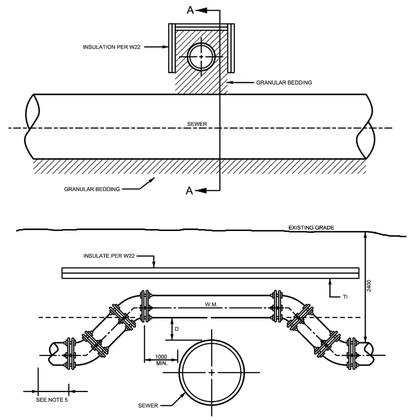

SECTION A - A

NOTES:

FOR WATERMAIN 100mm (NOMINAL) TO 400mm (NOMINAL)

1. BARREL TO BARREL SEPARATION (D) SHALL BE 250mm MINIMUM.
2. THRUST BLOCKS FOR MAINS LARGER THAN 400mm (NOMINAL) SHALL BE PER SPECIAL DESIGN.
3. FOR 300mm (NOMINAL) AND 400mm (NOMINAL) MAINS, BENDS SHALL BE MAX. 22° 30'.
4. CONCRETE FOR THRUST BLOCKS SHALL BE 20 MPa.
5. REFER TO W25.6 FOR RESTRAINED LENGTH REQUIREMENTS.
6. REFER TO W25.3 AND W25.4 FOR THRUST BLOCK REQUIREMENTS.
7. ALL DIMENSIONS ARE IN MILLIMETRES UNLESS SHOWN OTHERWISE.
8. DESIGNED TO MEET THE INTENT OF THE MOE WATERMAIN DESIGN CINTERIA JUNE 2012.
9. CATHODIC PROTECTION MEASURES SHALL BE INSTALLED IN ACCORDANCE WITH W39, W40, AND W42.
10. TRACER WIRE REQUIRED FOR PVC, PEX AND HDPE WATERMAIN PIPE ONLY AS PER W36.

Ottawa

WATERMAIN CROSSING OVER SEWER

DATE:	MAY 2001
REV. DATE:	MARCH 2021
DWG. No.:	W25.2

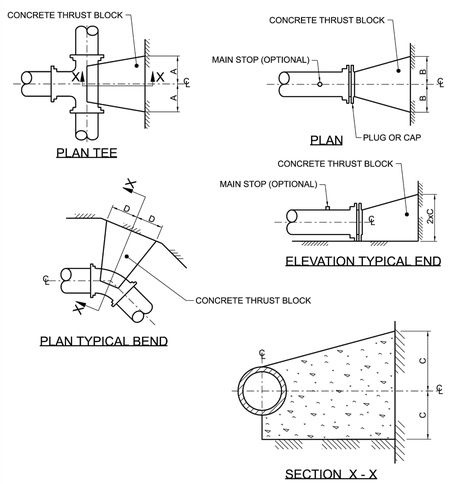

SECTION X - X

NOTES:
1. CONCRETE SHALL BE PLACED TO WITHIN 50mm OF FACE OF THE BELL.
2. BOND BREAKER TO BE USED BETWEEN CONCRETE AND FITTINGS.
3. ALL DIMENSIONS ARE IN MILLIMETERS UNLESS OTHERWISE SHOWN.
4. REFER TO W25.4 FOR ADDITIONAL REQUIREMENTS.
5. THRUST BLOCKS SHALL BE 20 MPa. CONCRETE AND AS SHOWN ON ABOVE DRAWINGS UNLESS OTHER DIRECTED BY THE CONTRACT ADMINISTRATOR. THE BLOCK SHALL BE CENTERED ON THE THRUST FORCE AND SHALL ALSO PARTIALLY CRADLE THE FITTING TO DISTRIBUTE THE FORCE. THE SIDES OF THE BLOCK SHALL BE 80mm FROM THE JOINT ON EITHER SIDE OF THE BEND OR TEE.
6. THE CONCRETE WHERE POSSIBLE SHALL BE PLACED AGAINST UNDISTURBED SOIL AT THE BOTTOM AND SIDE OF THE TRENCH. WHERE THRUST BLOCKS CAN NOT BE POURED TO UNDISTURBED SOIL, OR WHERE IT WOULD CONFLICT WITH EXISTING OR FUTURE INFRASTRUCTURE, THE THRUST BLOCK SHALL BE DESIGNED BY A PROFESSIONAL ENGINEER.
7. EXCEPT FOR THE ADDITION OF WATER, CONCRETE FOR THRUST BLOCKS SHALL COME PREMIXED FROM CONCRETE SUPPLIER, AS 'READY MIX' FROM A CONCRETE TRUCK. ON-SITE MIXING OF CEMENT, SAND AND AGGREGATE ETC. BY THE CONTRACTOR, FOR THE PURPOSE OF MAKING CONCRETE THRUST BLOCKS/ ANCHORS WILL NOT BE ACCEPTED.

N.T.S.

Ottawa

CONCRETE THRUST BLOCKS FOR PVC AND DI PIPE 400mm AND UNDER

DATE:	MAY 2001
REV. DATE:	MARCH 2022
DWG. No.:	W25.3

1. SOIL DESCRIPTION: VERY FINE SANDS, SANDY CLAYS, CLAYS.

SOILS WITH TYPICAL BEARING STRENGTH OF 100 TO 199 KPa

PIPE DIAMETER	DIMENSION NOTED ON W25.3			
	A	B	C	D
102	250	250	200	200
152	400	400	250	300
203	550	550	300	450
254	650	650	400	500
305	800	800	450	650
406	1050	1050	600	850

2. SOIL DESCRIPTION: SILTY SAND GRAVELS OR CLAYEY SAND GRAVEL MIXTURES, MODERATE AMOUNT OF FINES.

SOILS WITH TYPICAL BEARING STRENGTH OF 200 TO 299 KPa

PIPE DIAMETER	DIMENSION NOTED ON W25.3			
	A	B	C	D
102	200	200	150	150
152	250	250	200	200
203	350	350	250	270
254	450	450	300	350
305	500	500	350	400
406	750	750	400	600

3. SOIL DESCRIPTION: SANDS, GRAVELS AND GRAVEL-SAND MIXTURES, LITTLE OR NO FINES.

SOILS WITH TYPICAL BEARING STRENGTH OF 300 KPa AND OVER

PIPE DIAMETER	DIMENSION NOTED ON W25.3			
	A	B	C	D
102	150	150	150	150
152	200	200	200	200
203	300	300	200	230
254	400	400	250	270
305	450	450	300	300
406	650	650	350	450

NOTES:

1. THE ABOVE THRUST BLOCK DIMENSIONS MEET OR EXCEED THE WATERMAIN DESIGN CRITERIA FOR FUTURE ALTERATIONS AUTHORIZED UNDER A DRINKING WATER WORKS PERMIT.
2. THE ASSUMPTIONS MADE FOR THE ABOVE CALCULATIONS ARE AS FOLLOWS:
   a) MAXIMUM OPERATING PRESSURE OF 100 psi.
   b) MAXIMUM SURGE PRESSURE WITH A FLOW VELOCITY CHANGE OF 0.6 m/s OF 115 psi (115 psi FOR CLASS 52 DI AND FOR PVC MAX. SURGE IS 35 psi)
3. THE TABLES APPLY TO BOTH DUCTILE IRON AND PVC. WHERE ONE LENGTH EXCEEDED THE OTHER THE LONGER LENGTH WAS USED.
4. DIMENSIONS MAY BE ADJUSTED SO LONG AS THE BEARING SURFACE AREA OF THE THRUST BLOCK IS NOT REDUCED.
4. TO BE USED IN CONJUNCTION WITH W25.3.

Ottawa

THRUST BLOCK DIMENSION TABLES FOR PVC AND DI PIPE 400mm AND UNDER

DATE:	MAY 2001
REV. DATE:	MARCH 2011
DWG. No.:	W25.4

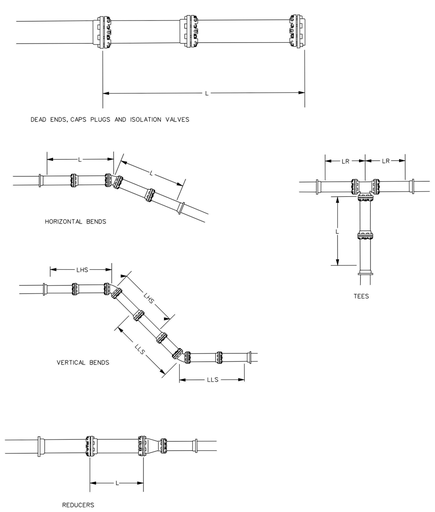

NOTES:

1. ANY JOINT THAT FALLS WITHIN THE RECOMMENDED LENGTH (L) SHALL BE RESTRAINED. SEE DRAWING W25.6
2. TO REDUCE THE NUMBER OF RESTRAINERS REQUIRED THE USE OF FULL PIPE LENGTHS IS RECOMMENDED IN THESE AREAS.

Ottawa

RESTRAINING AND RETAINING RINGS FOR PVC AND DI PIPE 400mm AND UNDER

DATE:	MAY 2001
REV. DATE:	NONE
DWG. No.:	W25.5

TABLE OF RESTRAINED LENGTHS FOR DI AND PVC WATERMAIN PIPE IN STANDARD GRANULAR 'A' EMBEDMENT IN SOILS OF BEARING CAPACITY OF 100 KPa AND OVER

REDUCERS	LARGER DIAMETER SIDE (TO BE RESTRAINED)					
SMALLER DIAMETER (UNRESTRAINED)	100mm	150mm	200mm	250mm	300mm	400mm
100mm	N/A	3	6	8	10	14
150mm	N/A	N/A	4	6	9	13
200mm	N/A	N/A	N/A	3	6	11
250mm	N/A	N/A	N/A	N/A	4	9
300mm	N/A	N/A	N/A	N/A	N/A	7
400mm	N/A	N/A	N/A	N/A	N/A	N/A

	PIPE DIAMETER					
	100mm	150mm	200mm	250mm	300mm	400mm
DEAD ENDS, CAPS, PLUGS, VALVES						
BEFORE CAPS AND EITHER SIDE OF VALVES - L	5	6	9	10	12	16
VERTICAL BENDS						
LENGTH HIGH SIDE - LHS	3	4	5	6	7	9
LENGTH LOW SIDE - LLS	1.5	2	2.5	3	3.5	4.5
TEES						
LENGTH ALONG THE BRANCH - L	1	1	1	1	1	1
LENGTH ALONG THE RUN - Lr	3	3	3	3	3	3
HORIZONTAL BENDS						
11.25, 22.5, AND 45 DEGREE BENDS	1	1.5	1.5	2	2	2.5

NOTES:

1. THE ABOVE RESTRAINED LENGTHS MEET OR EXCEED THE WATERMAIN DESIGN CRITERIA FOR FUTURE ALTERATIONS AUTHORIZED UNDER A DRINKING WATER WORKS PERMIT.
2. THE ASSUMPTIONS MADE FOR THE ABOVE CALCULATIONS ARE AS FOLLOWS:
   a) MAXIMUM OPERATING PRESSURE OF 100 psi.
   b) MAXIMUM SURGE PRESSURE WITH A FLOW VELOCITY CHANGE OF 0.6 m/s OF 115 psi (115 psi FOR CLASS 52 DI AND FOR PVC MAX. SURGE IS 35 psi)
3. FOR SOFTWARE CALCULATIONS A TEST PRESSURE OF 150 psi AND A SAFETY FACTOR OF 1.5 WAS USED WHICH RESULTS IN 225 psi MAXIMUM PRESSURE.
4. TYPE 5 TRENCH BEDDING.
5. DEPTH TO BURY 2.4 METRES EXCEPT FOR VERTICAL BENDS WHERE THE HIGH SIDE IS AT 1.8 METRES.
6. EMBEDMENT MATERIAL GRANULAR 'A' WITH CHARACTERISTICS OF ASTM D2487 GP.
7. GP SOILS ARE DESCRIBED AS POORLY GRADED GRAVEL AND SAND-GRAVEL MIXES WITH LITTLE OR NO FINES.
8. (L<) MUST BE OF SOLID PIPE WITHOUT JOINTS, FITTINGS, ETC.
9. THE TABLES APPLY TO BOTH DUCTILE IRON AND PVC. WHERE ONE LENGTH EXCEEDED THE OTHER THE LONGER LENGTH WAS USED.
10. RESTRAINED LENGTHS ARE IN METRES.

Ottawa

TABLES OF RESTRAINED LENGTHS FOR PVC AND DI PIPE 400mm AND UNDER

DATE:	MAY 2001
REV. DATE:	MARCH 2011
DWG. No.:	W25.6

No.	Date	Description	By
2	2023/03/17	REISSUED FOR SITE PLAN CONTROL	É.P
1	2022/08/12	ISSUED FOR SITE PLAN CONTROL	É.P

STAMPS:

LICENSED PROFESSIONAL ENGINEER
J. M. E. POTVIN
100208490
March 17, 2023
PROVINCE OF ONTARIO

DESIGNED BY — APPROVED BY

ENGINEER: CIMA+

CLIENT: BERTONE

PROJECT NAME: 1649 MONTREAL ROAD MONTREAL AND BLAIR

SHEET TITLE: DETAILS PLAN

DISCIPLINE: CIVIL

DRAFTER: S.C. POGGIOLI	SCALE:
DESIGNER: É. POTVIN	DATE: 22/08/31
APPROVER: C.L. LEBEL	CITY APPLICATION No: D07-12-22-0132
PROJECT No: A001101	DRAWING No: C012
SHEET No: 13 of 14	

TITLEBLOCK 24x36 \ VERT ENG 3.0

PRINT DATE: 2023/03/16 / PAPER SIZE: ISO A4 (210.00 x 297.00 MM)
PATH: \\cima.plus\cima\Cima-C10\Ott_Projects\A\A001000-A001499\A001101_Blair - Mill Road Towers\400\400_Civil\C0008@13_Details.dwg / LAYOUT: C012

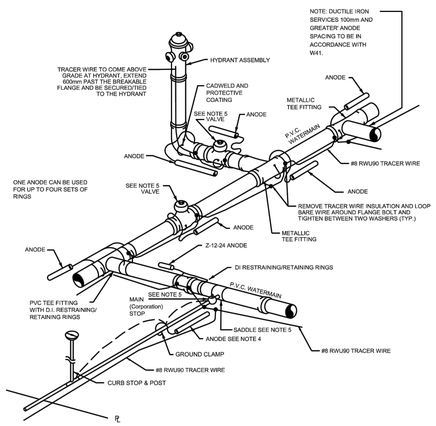

NOTES:

1. ANODE CONNECTING WIRE TO BE LOOPED AROUND PIPES / FITTINGS AND KNOTTED.
2. PROTECTIVE COATING TO BE APPLIED TO ALL CADWELDS.
3. ANODE TYPE & SPACING AS PER W40.
4. CONNECT ANODE TO SERVICES USING A GROUND CLAMP AND FOR PEX SERVICES CONNECT ANODE TO TRACER WIRE TERMINAL E ON BOTH MAIN AND CURB STOPS.
5. PROTECT AUXILIARY VALVES, ISOLATION VALVES, SADDLES AND MAIN STOPS/FITTINGS/VALVES/HYDRANT BOLTS AND FLANGE WITH A PETROLATUM WAX TAPE COATING SYSTEM.
   FOR PEX SERVICES ALSO WAX TAPE CURB STOP UP TO THE BASE OF THE TEE HEAD.
6. ALL DIMENSIONS ARE IN MILLIMETERS.
7. TRACER WIRE BOLT CONNECTIONS TO BE COMPLETED PER W55.
8. TRACER WIRE SPLICES TO BE COMPLETED PER W47.

Ottawa	CATHODIC PROTECTION FOR PVC WATERMAIN SYSTEMS	DATE: MAY 2001
		REV. DATE: MARCH 2021
		DWG. No.: W40

SIZE (mm)	ANODE TYPE	WEIGHT (Kg)
19 TO 50 COPPER SERVICE	Z-12-24	5.4
38 TO 50 PEX SERVICE	Z-12-24	5.4
100 TO 300 DI SERVICE	Z-24-48	10.9
100 TO 300 DI FITTINGS	Z-24-48	5.4
100 TO 250 VALVES	Z-24-48	5.4
HYDRANT ASSEMBLY	Z-24-48	10.9
400 DI SERVICE/FITTINGS/VALVES	Z-24-48	10.9

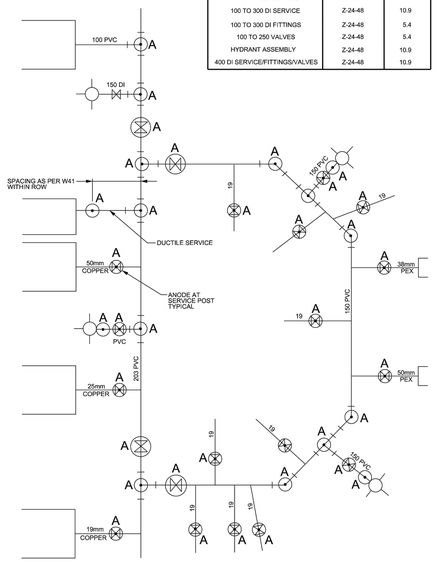

A - DENOTES ANODE LOCATION

NOTES:

1. ALL DIMENSIONS ARE IN MILLIMETRES UNLESS SHOWN OTHERWISE
2. ANODE FOR JOINT RESTRAINTS FOR PVC FITTINGS 300mm DIAMETER AND SMALLER.
3. INSTALL TRACER WIRE AS PER W40.

Ottawa	TYPICAL ANODE INSTALLATION PVC WATERMAIN	DATE: MAY 2001
		REV. DATE: MARCH 2021
		DWG. No.: W42

No.	Date	Description	By
2	2023/03/17	REISSUED FOR SITE PLAN CONTROL	É.P
1	2022/08/12	ISSUED FOR SITE PLAN CONTROL	É.P

STAMPS:

LICENSED PROFESSIONAL ENGINEER
J. M. E. POTVIN
100208490
March 17, 2023
PROVINCE OF ONTARIO

DESIGNED BY

APPROVED BY

ENGINEER:

CIMA+

CLIENT:

BERTONE

PROJECT NAME:

1649 MONTREAL ROAD
MONTREAL AND BLAIR

SHEET TITLE:

DETAILS PLAN

DISCIPLINE:

CIVIL

DRAFTER: S.C. POGGIOLI	SCALE:
DESIGNER: É. POTVIN	DATE: 22/08/31
APPROVER: C.L. LEBEL	CITY APPLICATION No: D07-12-22-0132
PROJECT No: A001101	DRAWING No: C013
SHEET No: 14 of 14	

TITLEBLOCK 24x36 \VERT ENG 3.0

PRINT DATE: 2023/03/16 / PAPER SIZE: ISO A4 (210.00 x 297.00 MM)
PATH: \\cima.plus\cima\Cima-C10\Ott_Projects\AA001000-A001499\A001101_Blair - Mtl Road Towers\400\460_Civil\C008\B13_Details.dwg / LAYOUT: C013