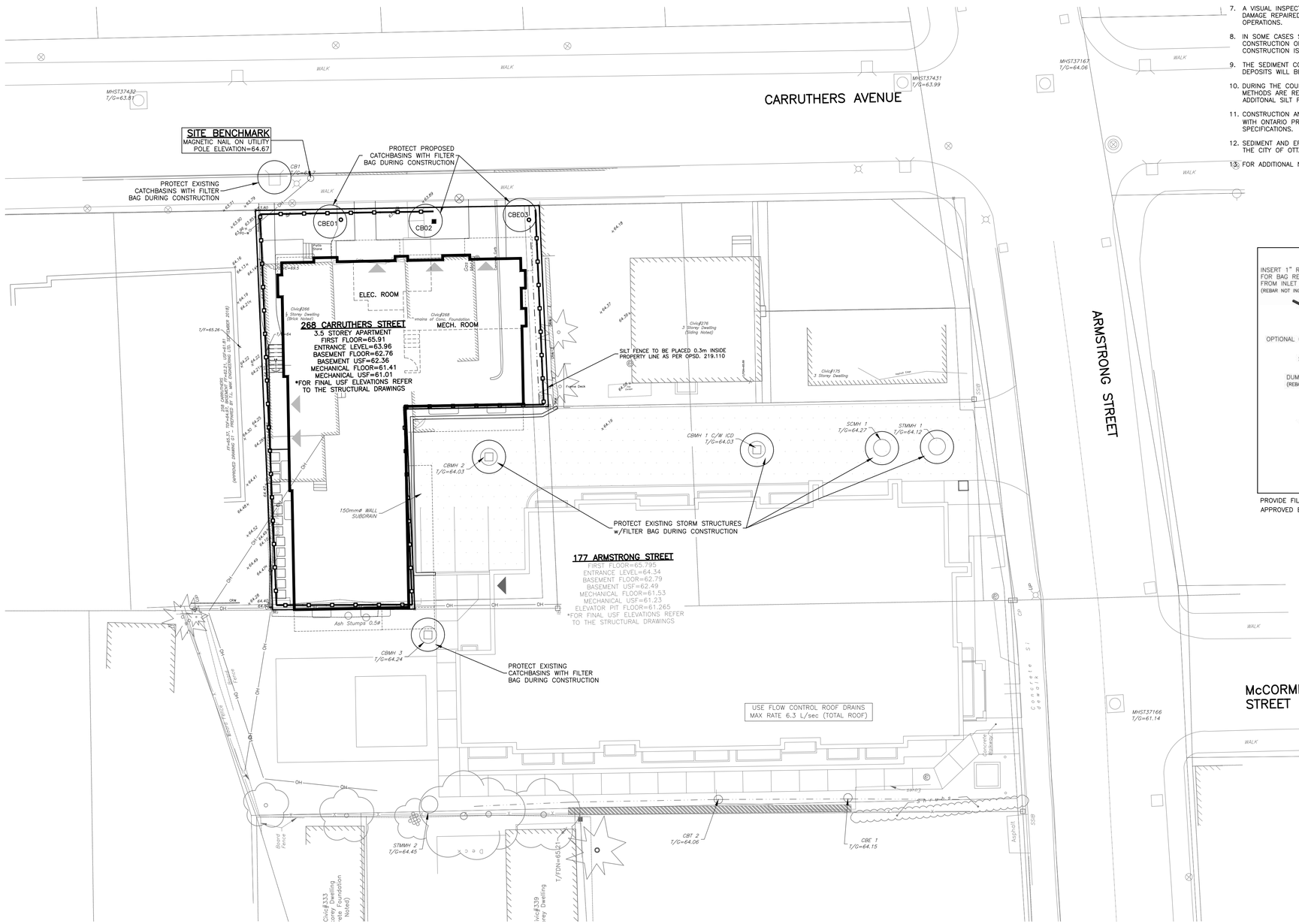

EROSION AND SEDIMENT CONTROLS DURING CONSTRUCTION.

DURING ALL CONSTRUCTION ACTIVITIES, EROSION AND SEDIMENTATION SHALL BE CONTROLLED BY THE FOLLOWING TECHNIQUES:

1. THE CONTRACTOR SHALL IMPLEMENT BEST MANAGEMENT PRACTICES, TO PROVIDE FOR PROTECTION OF THE AREA DRAINAGE SYSTEM AND THE RECEIVING WATERCOURSE, DURING CONSTRUCTION ACTIVITIES. THE CONTRACTOR ACKNOWLEDGES THAT FAILURE TO IMPLEMENT APPROPRIATE EROSION AND SEDIMENT CONTROL MEASURES MAY BE SUBJECT TO PENALTIES IMPOSED BY ANY APPLICABLE REGULATORY AGENCY.
2. LIMITING THE EXTENT OF EXPOSED SOILS AT ANY GIVEN TIME.
3. REVEGETATION OF EXPOSED AREAS AS SOON AS POSSIBLE.
4. MINIMIZATION OF AREA TO BE CLEARED AND DISRUPTION TO ADJACENT AREAS.
5. INSTALLATION OF FILTER CLOTH BETWEEN FRAME AND COVER ON ALL PROPOSED CATCH BASINS AND CATCH BASIN MANHOLES.
6. A SILT FENCE TO BE INSTALLED 0.3m INSIDE THE SITE PROPERTY LINE TO LOCATIONS SHOWN ON THIS DRAWING.
7. A VISUAL INSPECTION SHALL BE COMPLETED DAILY ON SEDIMENT CONTROL BARRIERS AND ANY DAMAGE REPAIRED IMMEDIATELY. CARE WILL BE TAKEN TO PREVENT DAMAGE DURING CONSTRUCTION OPERATIONS.
8. IN SOME CASES SOME BARRIERS MAY BE REMOVED TEMPORARILY TO ACCOMODATE THE CONSTRUCTION OPERATIONS. THE AFFECTED BARRIERS WILL BE REINSTATED AT NIGHT WHEN CONSTRUCTION IS COMPLETED.
9. THE SEDIMENT CONTROL DEVICES WILL BE CLEANED OF ACCUMULATED SILT AS REQUIRED. THE DEPOSITS WILL BE DISPOSED OF AS PER THE REQUIREMENTS OF THE CONTRACT.
10. DURING THE COURSE OF CONSTRUCTION IF THE ENGINEER BELIEVES THAT ADDITIONAL PREVENTION METHODS ARE REQUIRED TO CONTROL EROSION AND SEDIMENTATION, THE CONTRACTOR WILL INSTALL ADDITONAL SILT FENCES OR OTHER METHODS AS REQUIRED TO THE SATISFACTION OF THE ENGINEER.
11. CONSTRUCTION AND MAINTENANCE REQUIRMENTS FOR EROSION AND SEDIMENT CONTROLS TO COMPLY WITH ONTARIO PROVINCIAL STANDARD SPECIFICATION (OPSS) OPSS 805, AND CITY OF OTTAWA SPECIFICATIONS.
12. SEDIMENT AND EROSION CONTROL MEASURES MAY BE MODIFIED IN THE FIELD AT THE DISCRETION OF THE CITY OF OTTAWA SITE INSPECTOR OR CONSERVATION AUTHORITY.
13. FOR ADDITIONAL NOTES REFER TO NOTES AND LEGEND SHEET, DRAWING C001.

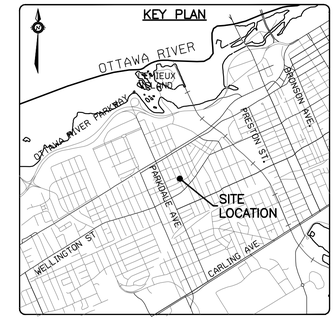

LEGEND

- PROPERTY LINE
- PROPOSED CURB
- SILT FENCE

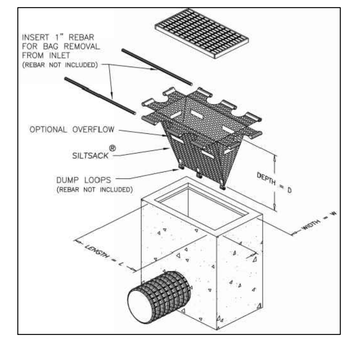

PROVIDE FILTER BAGS AS SHOWN (GEO-SYNTHETICS MANUFACTURER OR APPROVED EQUIVALENT)

FILTER BAG DETAIL

N.T.S

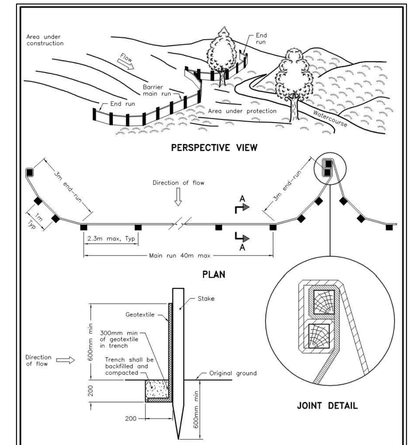

NOTE:
A All dimensions are in millimetres unless otherwise shown.

ONTARIO PROVINCIAL STANDARD DRAWING	Nov 2015	Rev 2
LIGHT–DUTY SILT FENCE BARRIER		OPSD 219.110

NOTES:

1. WOVEN WIRE FENCE TO BE FASTENED SECURELY TO WOOD POSTS WITH WIRE TIES OR STAPLES.
2. POSTS TO BE SPACED AT 2.3 METRES CENTRE TO CENTRE.
3. WHEN TWO SECTIONS OF FILTER CLOTH ADJOIN EACH OTHER THEY SHALL BE OVERLAPPED BY A MINIMUM OF 500mm.
4. MAINTENANCE SHALL BE PERFORMED AS NEEDED AND MATERIAL REMOVED WHEN "BULGES" DEVELOP IN THE SILT FENCE.
5. WOOD POSTS TO BE HARDWOOD TYPE (50mm x 50mm).
6. GEOTEXTILE TO BE EMBEDDED 200mm INTO GROUND.
7. GEOTEXTILE TO CONFORM TO OPSS 805 STANDARDS.
8. SILT FENCE MUST BE INSTALLED BEFORE COMMENCEMENT OF CONSTRUCTION AND IN ACCORDANCE WITH DETAIL. SILT FENCE CAN BE REMOVED AFTER LANDSCAPING IS COMPLETE.
9. SEDIMENTS MUST BE CLEARED AWAY WHEN THEY REACH HALF THE HEIGHT OF THE FENCE.

CAUTION
THE POSITION OF ALL POLE LINES, CONDUITS, WATERMAINS, SEWERS AND OTHER UNDERGROUND AND OVERGROUND UTILITIES AND STRUCTURES IS NOT NECESSARILY SHOWN ON THE CONTRACT DRAWINGS, AND WHERE SHOWN, THE ACCURACY OF THE POSITION OF SUCH UTILITIES AND STRUCTURES IS NOT GUARANTEED. BEFORE STARTING WORK, DETERMINE THE EXACT LOCATION OF ALL SUCH UTILITIES AND STRUCTURES AND ASSUME ALL LIABILITY FOR DAMAGE TO THEM.

REV	REVISION DESCRIPTION	DATE	BY	APPD
2	REVISED AS PER CITY COMMENTS	21/03/23	SAB	BMT
1	ISSUED FOR SITE PLAN APPROVAL	09/11/22	SAB	BMT

SCALE: HORIZONTAL 1:150 (0, 1m, 3m, 6m)
NORTH

DESIGNED BY: J.L. FITZPATRICK 2023-03-22 — LICENSED PROFESSIONAL ENGINEER, PROVINCE OF ONTARIO
REVIEWED BY: B. M. THOMAS 2023-03-22 — LICENSED PROFESSIONAL ENGINEER, PROVINCE OF ONTARIO

DEVELOPER
McCORMICK PARK DEVELOPMENTS
1600 LAPERRIERE AVENUE, SUITE 205
OTTAWA, ON. K1M 2H9
613.421.1515

exp Services Inc.
t: +1 613.688.1899 | f: +1 613.225.7330
Suite 300-2650 Queensview Drive, Unit 100
Ottawa, ON K2B 8H6
Canada
www.exp.com
• BUILDINGS • EARTH & ENVIRONMENT • ENERGY •
• INDUSTRIAL • INFRASTRUCTURE • SUSTAINABILITY •

BASEPLAN: SAB
DESIGN: BMT
CHECKED: BMT
CAD: SAB
PROJECT MANAGER: BMT
APPROVED: BMT

PROJECT: CARRUTHERS AVENUE DEVELOPMENT
266–268 CARRUTHERS
OTTAWA, ONTARIO.

TITLE: EROSION AND SEDIMENT CONTROL PLAN

PROJECT No. OTT–22014656–A0
SURVEY: FMW/FSD
DATE: JUNE 2022
DRAWING No. C300

D07-12-22-0162

18875

Filename: e:\ott\ott-22014656-d0\60_execution\65_drawings\cad-2023\22014656-c300-esc.dwg
Last Saved: 3/6/2023 1:10:00 PM Last Plotted: 3/31/2023 2:21:12 PM Plotted by: buters
Layout: C300 Plot Scale: 1:150 Plot Date: 3/31/2023
References: xref-block.dwg; xref-TOPO-Compiled.dwg; xref-ARCH-COMB.dwg; xref-UCC-COMB.dwg; Xref-Serv-COMB.dwg