GENERAL NOTES

1. ALL WORK, MATERIAL AND CONSTRUCTION METHODS TO CONFORM WITH THE LATEST SPECIFICATIONS, POLICIES, REGULATIONS, GUIDELINES AND LAWS FOR THE CITY OF OTTAWA, ONTARIO BUILDING CODE (OBC), MINISTRY OF THE ENVIRONMENT (MOE), ONTARIO PROVINCIAL STANDARD DRAWINGS AND SPECIFICATIONS (OPSD AND OPSS), THE ENVIRONMENTAL PROTECTION ACT AND THE WATER RESOURCES ACT. WHERE A CITY STANDARD EXISTS, IT SHALL BE USED IN PLACE OF THE OPSD/OPSS STANDARDS.
2. THIS PLAN SHOULD BE READ IN CONJUNCTION WITH ALL OTHER CONSULTANT'S PLANS. ANY DISCREPANCIES SHALL BE CLARIFIED PRIOR TO CONSTRUCTION. INFORMATION RELATED TO DIMENSIONS FOR PRIVATE ROAD, PARKING CURBING, BUILDING LOCATIONS AND SETBACKS SHALL BE TAKEN FROM THE SITE PLAN PREPARED BY THE ARCHITECT.
3. THE CONTRACTOR IS RESPONSIBLE FOR OBTAINING AND PAYING FOR ALL PERMITS RELATED TO SERVICE CONNECTIONS INCLUDING ROAD CUT PERMITS AND THIRD PARTY UTILITY COSTS.
4. THE CONTRACTOR IS ADVISED THAT WORKS BY OTHERS MAY BE ONGOING DURING THE PERIOD OF THIS CONTRACT. THE CONTRACTOR SHALL COORDINATE CONSTRUCTION ACTIVITIES WITH ALL OTHER CONTRACTORS AND PREVENT CONSTRUCTION CONFLICTS.
5. THE INFORMATION SHOWN FOR EXISTING UTILITIES WAS PROVIDED BY OTHERS. THE INFORMATION IS SHOWN FOR GENERAL INFORMATION ONLY AND THE ACCURACY OR COMPLETENESS OF THE PROVIDED INFORMATION HAS NOT BEEN CONFIRMED BY COUNTERPOINT ENGINEERING INC. CONTRACTOR IS RESPONSIBLE FOR LOCATING AND PROTECTING ALL UTILITIES DURING CONSTRUCTION. ALL EXISTING UTILITIES MUST BE LOCATED AND VERIFIED BY THE CONTRACTOR PRIOR TO COMMENCEMENT OF WORK. ANY VARIANCE IS TO BE IMMEDIATELY REPORTED TO THE ENGINEER. LOST TIME DUE TO FAILURE OF THE CONTRACTOR TO CONFIRM UTILITY LOCATIONS AND NOTIFY THE ENGINEER OF POSSIBLE CONFLICTS PRIOR TO CONSTRUCTION WILL BE AT THE CONTRACTOR'S EXPENSE. ALL SERVICES TO BE INSTALLED AS PER CITY OF OTTAWA STANDARDS, AND MINISTRY OF ENVIRONMENT (MOE) GUIDELINES (LATEST EDITION).
6. EXCEPT WHERE INDICATED, ALL DIFFERENCES IN GRADE BETWEEN THIS SITE AND ADJOINING LANDS ARE TO BE TAKEN UP ON OWNER'S LAND WITH A MAXIMUM SLOPE OF ONE(1) VERTICAL AND THREE (3) HORIZONTAL, SODDED AND/OR PAVED; AND/OR RETAINING WALLS UNLESS OTHERWISE SPECIFIED.
7. ALL DIMENSIONS AND ELEVATIONS TO BE VERIFIED PRIOR TO CONSTRUCTION AND ANY DISCREPANCIES FOUND PRIOR TO OR DURING CONSTRUCTION SHALL BE CLARIFIED WITH THE ENGINEER.
8. INSPECTIONS:
9. ALL WORK ON THE MUNICIPAL RIGHT OF WAY AND EASEMENTS AND ANY WORK RELATING TO WATERMAINS AND SEWERS TO BE INSPECTED BY THE MUNICIPALITY PRIOR TO BACKFILLING.
10. THE OWNER COVENANTS AND AGREES NOT TO MAKE A MATERIAL CHANGE OR CAUSE A MATERIAL CHANGE TO BE MADE TO A PLAN, SPECIFICATION, DOCUMENT OR OTHER INFORMATION, ON THE BASIS OF WHICH THIS DRAWING WAS APPROVED BY THE CITY, WITHOUT NOTIFYING, FILING DETAILS WITH AND OBTAINING WRITTEN AUTHORIZATION OF THE CITY.
11. FOR DETAILED SPECIFICATIONS REGARDING:
    - STRIPPING
    - GRANULAR BASE MATERIALS, BASE COURSE AND SURFACE COURSE ASPHALT MATERIALS
    - COMPACTION REQUIREMENTS
    - IMPORT / UNSUITABLE / SURPLUS MATERIALS
    - PAVEMENT DESIGN
    - MANHOLE, CATCHBASIN, AND SERVICE TRENCH BACKFILLING
    - MANHOLE, CATCHBASIN, AND SERVICE TRENCH EXCAVATION
    - BEDDING

    REFER TO GEOTECHNICAL REPORT NO. 4342-16-G-CPR-A BY TORONTO INSPECTION LTD. DATED APRIL 26, 2016.
12. ALL WORKS WITHIN THE CITY R.O.W. SHALL COMPLY WITH THE CITY OF OTTAWA STANDARDS AND SPECIFICATIONS.
13. CONTRACTOR TO COMPLETE TOPOGRAPHIC AS-BUILT SURVEY SEALED BY AN OLS UPON PROJECT COMPLETION. ALL STRUCTURES, SITE SIGNAGE, LINE PAINTING, SURFACE FEATURES, AND DRAINAGE POINTS AS IDENTIFIED ON THE SITE PLAN, GRADING PLAN, SITE SERVICING PLAN, LANDSCAPE PLAN AND ELECTRICAL PLANS TO BE PROVIDED.
14. CONTRACTOR TO COMPLETE UNDERGROUND AS-BUILT SURVEY SEALED BY AN OLS UPON PROJECT COMPLETION. ALL UNDERGROUND SERVICES TO BE SHOWN IN AS-BUILT LOCATIONS-COMPLETE WITH: INVERTS AT ALL STRUCTURES-FOR STORM AND SANITARY SERVICES, WATERMAIN INVERTS AT ALL APPURTENANCES AND CROSSINGS. ALL SERVICES TO BE IDENTIFIED WITH MATERIAL TYPE AND SIZE. ALL UTILITIES INCLUDING BUT NOT LIMITED TO: GAS, HYDRO, CABLE, TELEPHONE TO BE INCLUDED AND WHERE NECESSARY DEPTHS PROVIDED AT ALL CROSSINGS. ALL STUBS AS REQUIRED FOR PHASING TO BE INCLUDED AND SHALL CONFIRM INVERTS DEPTH, PIPE SIZE AND MATERIALS.

GRADING NOTES

1. ALL DISTURBED AREAS OUTSIDE OF PROPERTY LIMITS SHALL BE RESTORED TO ORIGINAL CONDITION OR BETTER. ALL TREE AND SHRUB RELOCATION SUBJECT TO APPROVAL BY THE LANDSCAPE ARCHITECT.
2. ALL BARRIER CURBS WITHIN THE SITE TO BE CONSTRUCTED AS PER CITY OF OTTAWA DETAIL SC1.1 HEIGHT OF EXPOSED FACE OF BARRIER CURB TO BE 0.15m UNLESS OTHERWISE SHOWN.
3. ALL CURB CUTS TO BE AS PER OPSD 604.010.
4. REFER TO ARCHITECTURAL SITE PLAN FOR ALL DIMENSIONS AND LOCATIONS OF RAMPS, PAINTED LINES, WALKWAYS, SIDEWALKS, CURBS, CONCRETE PADS AND ISLANDS.
5. EMBANKMENTS TO BE SLOPED AT MAX. 3:1, UNLESS OTHERWISE SPECIFIED.
6. METHOD OF TERMINATION FOR CONCRETE CURB AS PER OPSD 608.010.
7. PERFORATED SUBDRAINS ARE TO BE CONNECTED TO INTERNAL CATCH BASINS AND CATCH BASIN MANHOLES AS PER DETAIL PROVIDED AT THE SUBGRADE INTERFACE EXCEPT IN THE BOULEVARD AREAS. CONTRACTOR IS TO ENSURE A MINIMUM 2% SLOPE OF THE SUBDRAINS TOWARDS THE CATCH BASIN. SUBDRAIN PSPE TO BE 100mmø PERFORATED, CORRUGATED, POLYETHYLENE ENCASED IN FILTER FABRIC "SOCK" AS PER OPSS 405 AND 1860. BACKFILL WITH 20mmø WELL GRADED FREE DRAINING GRANULAR MATERIAL APPROVED BY THE ENGINEER. SUBDRAINS SHALL BE CAPPED AT UPSTREAM ENDS.
8. REFER TO LANDSCAPING PLANS FOR LANDSCAPE DETAILS AND THE LIMITS OF LANDSCAPED AREAS.
9. ALL RECYCLED, PROCESSED OR OTHERWISE ALTERED MATERIALS ARE CONSIDERED ALTERNATIVES AND MUST BE APPROVED BY THE OWNER AND ENGINEER PRIOR TO USE ON SITE.
10. ALL UNSUITABLE SOIL OR SURPLUS MATERIAL OBTAINED FROM EXCAVATIONS TO BE DISPOSED OF OFF-SITE, AT A SUITABLE WASTE DISPOSAL FACILITY IN ACCORDANCE WITH ALL APPLICABLE STANDARDS, AND REGULATIONS.
11. THE PROPERTY SHALL BE GRADED SUCH THAT SURFACE DRAINAGE IS DIRECTED AWAY FROM THE BUILDINGS.
12. ALL EXISTING STRUCTURES, FENCING, TREES, & ETC., WITHIN CONSTRUCTION AREA, UNLESS OTHERWISE NOTED TO REMAIN, SHALL BE REMOVED & DISPOSED OF OFF SITE.
13. ALL DRAINAGE STRUCTURES SHALL BE PRE-CAST FROM AN APPROVED SOURCE, MEETING ALL APPLICABLE REQUIREMENTS.
14. GENERAL CONTRACTOR SHALL NOTIFY ALL UTILITY COMPANIES HAVING UNDERGROUND UTILITIES ON SITE (OR IN RIGHT-OF-WAY) PRIOR TO EXCAVATION. CONTRACTOR SHALL CONTACT UTILITY LOCATING COMPANY AND LOCATE ALL UTILITIES PRIOR TO GRADING START.
15. SITE GRADING SHALL NOT PROCEED UNTIL APPROPRIATE EROSION AND SEDIMENT CONTROL MEASURES HAVE BEEN INSTALLED.
16. THE OWNER SHALL ENSURE THAT NO PERSONNEL OR EQUIPMENT ENCROACHES WITHIN THREE METERS (3.0M) OF THE HYDRO OTTAWA OVERHEAD MEDIUM VOLTAGE DISTRIBUTION LINES, UNLESS APPROVED BY HYDRO OTTAWA. THE OWNER SHALL CONTACT HYDRO OTTAWA PRIOR TO COMMENCING WORK WHEN PROPOSING TO WORK WITHIN 3.0M OF HYDRO OTTAWA DISTRIBUTION LINES. NO SUCH WORK SHALL COMMENCE WITHOUT APPROVAL OF HYDRO OTTAWA.

PAVING NOTES

1. INSPECTION OF SUB-GRADE REQUIRED BY ENGINEER/GEOTECHNICAL CONSULTANT PRIOR TO PLACEMENT OF PAVEMENT STRUCTURE. THE CONTRACTOR IS RESPONSIBLE FOR COORDINATION OF INSPECTIONS WITH ENGINEER/GEOTECHNICAL CONSULTANT.
2. LIGHT DUTY ASPHALT PAVEMENT TO BE CONSTRUCTED AS FOLLOWS:
   40mm HL3 OR SP 12.5 SURFACE COURSE
   40mm HL8 OR SP 19 BASE COURSE
   150mm OPSS GRANULAR 'A' BASE
   250mm OPSS GRANULAR 'B' SUB-BASE
3. HEAVY DUTY ASPHALT PAVEMENT TO BE CONSTRUCTED AS FOLLOWS:
   40mm HL3 OR SP 12.5 SURFACE COURSE
   80mm HL8 OR SP 19 BASE COURSE
   150mm OPSS GRANULAR 'A' BASE
   350mm OPSS GRANULAR 'B' SUB-BASE
4. ALL PAVEMENT MARKING, LINE PAINTING, DIRECTIONAL LINES/ARROWS ETC. SHALL BE PLACED IN ACCORDANCE WITH THE SITE PLAN. LINE PAINTING AND DIRECTIONAL SYMBOLS SHALL BE APPLIED WITH A MINIMUM OF TWO COATS OF ORGANIC SOLVENT BASED PAINT OR PER ARCHITECTS REQUIREMENTS.
5. WHERE PROPOSED ASPHALT MEETS EXISTING ASPHALT SURFACE, CONSTRUCT STEP JOINT AS PER DETAIL PROVIDED. WHERE THE THICKNESS OF THE ADJACENT ASPHALTIC CONCRETE SURFACE IS LESS THAN 90mm A BUTT JOINT, AS PER DETAIL PROVIDED, WILL BE SUFFICIENT. PROVIDE TACK COAT ON ALL VERTICAL AND HORIZONTAL SURFACES.

STORM SEWERS

1. FOR CONSTRUCTION DETAILS NOT SHOWN ON PLANS, REFERENCE SHALL BE MADE TO THE ONTARIO PROVINCIAL STANDARD DRAWINGS AND CITY OF OTTAWA STANDARDS.
2. ALL STORM SEWER WORKS SHALL BE CONSTRUCTED IN ACCORDANCE WITH CURRENT CITY OF OTTAWA STANDARDS, ONTARIO PROVINCIAL STANDARD DRAWINGS (OPSD) AND SPECIFICATIONS (OPSS).
3. ALL STORM MANHOLES TO BE SEE OPSD 701.010-701.015 (SIZE AS SHOWN) WITH FRAME AND COVER AS PER OPSD 401.010 TYPE 'A'. SAFETY PLATFORMS TO BE INSTALLED IN ALL MANHOLES WHERE DEPTHS EXCEED 5.0m AS PER OPSD 404.020.
4. ALL MAIN STORM SEWERS UP TO 450mm DIA. SHALL BE PVC SDR-35 OR EQUIVALENT APPROVED BY THE ENGINEER. PVC SEWER SHALL MEET THE CSA AND ASTM REQUIREMENTS AS NOTED WITHIN OPSS 1841 (MINIMUM 320kPa). ALL STORM SEWERS 525mm OR LARGER SHALL BE REINFORCED CONCRETE SEWER (CLASS 65-D UNLESS OTHERWISE INDICATED) IN ACCORDANCE WITH CSA SPECIFICATION A257.1-M92. CONTRACTOR IS RESPONSIBLE FOR SUPPLYING ADDITIONAL BEDDING AND/OR STRONGER PIPE IF ACTUAL TRENCH WIDTHS EXCEED DESIGN WIDTHS. RIGID PIPE REQUIRES CONCRETE ENCASEMENT FOR THE FIRST PIPE LENGTH CONNECTING TO ANY APPURTENANCES.
5. STORM SEWER BEDDING SHALL BE IN ACCORDANCE WITH OPSD 802.030.
6. ALL SINGLE CATCH BASINS TO BE PRECAST AS PER OPSD 705.010 WITH FRAME AND GRATE AS PER OPSD 400.020. ALL DOUBLE CATCH BASINS TO BE PRECAST AS PER OPSD 705.020.
7. ALL SINGLE CATCH BASIN LEADS TO BE MINIMUM 200mmø (UNLESS OTHERWISE SPECIFIED) WITH A MAXIMUM LENGTH OF 30m. ALL DOUBLE CATCH BASIN LEADS TO BE MINIMUM 375mmø (UNLESS OTHERWISE SPECIFIED). ALL CATCH BASIN LEADS TO BE PVC SDR-35 OR APPROVED EQUIVALENT UNLESS OTHERWISE SPECIFIED, SLOPED AT A MINIMUM 1.00%.
8. ALL CATCHBASIN LEADS TO BE CONNECTED TO THE STORM SEWER AS PER OPSD 708.010 AND 708.030.
9. CATCH BASIN LEAD INVERTS TO BE 1.50m BELOW FINISHED GRADE UNLESS OTHERWISE SPECIFIED.
10. ALL SEWERS TO BE TESTED IN ACCORDANCE WITH CITY OF OTTAWA AND OPSS.
11. ALL MH'S TO BE BENCHED AS PER OPSD 701.021. ALL PROPOSED STORM CBMH'S TO BE EQUIPPED WITH 300mm SUMPS AS PER SUMP DETAIL IN OPSD 701.010.
12. "MODULOC" OR APPROVED PRE-CAST MANHOLE AND CATCH BASIN ADJUSTERS TO BE USED IN LIEU OF BRICKING. PARGE ADJUSTING UNITS ON THE OUTSIDE ONLY.
13. SERVICES TO BUILDINGS SHALL BE TERMINATED 1.5m FROM THE BUILDING ENVELOPE UNLESS OTHERWISE NOTED.
14. ALL BUILDING SERVICES SHALL BE CAPPED AND MARKED WITH A 2X4 PAINTED GREEN (SANITARY), WHITE (STORM) AND BLUE (WATER). THE 2X4 SHALL EXTEND 0.6m ABOVE GRADE.
15. MANHOLE STEPS TO BE CONSTRUCTED AS PER OPSD 405.010.
16. WHERE COVER OF 2.0m IS NOT ACHIEVED PROVIDE INSULATION AS PER CITY OF OTTAWA DETAIL W22.
17. THE CONTRACTOR SHALL FLUSH AND PROVIDE CCTV CAMERA INSPECTIONS OF ALL STORM SEWERS, INCLUDING PICTORIAL REPORT, AND TWO (2) CD's IN A FORMAT ACCEPTABLE TO THE ENGINEER, PRIOR TO ASPHALT. CCTV REPORT AND CD's SHALL CONFORM TO THE REQUIREMENTS OF SPECIAL PROVISION NO. F-4050 FROM THE CITY OF OTTAWA "STANDARD TENDER DOCUMENTS FOR UNIT PRICE CONTRACTS - VOLUME NO.1: CONSTRUCTION SPECIFICATIONS".

SANITARY SEWERS

1. ALL SANITARY SEWERS SHALL BE PVC (SDR 35) MEETING CSA 182.6. FITTINGS FOR PVC SANITARY SEWER PIPE SHALL BE MANUFACTURED IN ACCORDANCE WITH A.S.T.M. SPECIFICATION D 3034 AND JOINTS SHALL BE BELL AND SPIGOT WITH RUBBER GASKETS.
2. SANITARY BEDDING SHALL BE IN ACCORDANCE WITH OPSD 802.030 AND THE APPROVED GEOTECHNICAL REPORT.
3. MANHOLES SHALL BE AS PER OPSD 701.010 TO 701.015 FRAME COVER SHALL BE PER OPSD 401.010 TYPE 'A'. SAFETY PLATFORMS TO BE INSTALLED IN ALL MANHOLES WHERE DEPTHS EXCEED 5.0m AS PER OPSD 404.020.
4. ALL SANITARY SEWERS SHALL BE LEAKAGE TESTED IN ACCORDANCE WITH CITY OF OTTAWA STANDARDS, ONTARIO PLUMBING CODE, AND OPSS STANDARDS 410.07.16 AND 407.07.24.
5. "MODULOC" OR APPROVED PRE-CAST MANHOLE ADJUSTERS TO BE USED IN LIEU OF BRICKING. PARGE ADJUSTING UNITS ON THE OUTSIDE ONLY.
6. ALL BUILDING SERVICES SHALL BE CAPPED AND MARKED WITH A 2X4 PAINTED GREEN (SANITARY) AND WHITE (STORM). THE 2X4 SHALL EXTEND 0.6m ABOVE GRADE.
7. SERVICES TO BUILDINGS TO BE TERMINATED 1.5m FROM THE EDGE OF BUILDING SIDEWALK UNLESS OTHERWISE NOTED AND PROVIDED WITH A TEMPORARY PLUG AT END. REFERENCE SHALL BE MADE TO THE BUILDING PLUMBING SHEETS FOR LOCATION OF SEWER, DOMESTIC, IRRIGATION CONNECTIONS AND FIRE LINE LEAD-IN.
8. MANHOLE STEPS TO BE CONSTRUCTED AS PER OPSD 405.010.
9. ALL MH'S TO BE BENCHED AS PER OPSD 701.021.
10. THE CONTRACTOR SHALL FLUSH AND PROVIDE CCTV CAMERA INSPECTIONS OF ALL SANITARY SEWERS, INCLUDING PICTORIAL REPORT, AND TWO (2) CD's IN A FORMAT ACCEPTABLE TO THE ENGINEER, PRIOR TO ASPHALT. CCTV REPORT AND CD's SHALL CONFORM TO THE REQUIREMENTS OF SPECIAL PROVISION NO. F-4050 FROM THE CITY OF OTTAWA "STANDARD TENDER DOCUMENTS FOR UNIT PRICE CONTRACTS - VOLUME NO.1: CONSTRUCTION SPECIFICATIONS".

WATERMAIN

1. ALL MATERIALS AND CONSTRUCTION METHODS MUST CORRESPOND TO THE CURRENT OBC, OPSD, OPSS AND CITY OF OTTAWA STANDARDS AND SPECIFICATIONS.
2. WATERMAIN 100 TO 300mmø SHALL BE AWWA C-900-97 POLYVINYL CHLORIDE (PVC) CLASS 150 DR-18 AND CSA CAN3 B137.3-92 WITH GASKETED BELL END. A 14 GAUGE TWIN SOLID COPPER PLASTIC COATED TRACER WIRE MUST BE INSTALLED WITH THE PIPE AND BROUGHT TO THE SURFACE AT EACH VALVE BOX. TRACER WIRE IS TO BE ATTACHED TO THE PIPE AND THE OUTSIDE OF EACH VALVE BOX BY MEANS OF APPROVED TAPE OR OTHER MEANS ACCEPTABLE TO THE ENGINEER.
3. WATERMAIN BEDDING SHALL BE IN ACCORDANCE WITH OPSD 802.030 AND AS PER THE APPROVED GEOTECHNICAL REPORT.
4. ALL BENDS, TEES, JOINTS, ETC., ARE TO BE RESTRAINED WITH THRUST BLOCKS AS PER CITY OF OTTAWA STANDARD DETAILS W25.3 AND W25.4.
5. ALL PROPOSED WATER PIPING MUST BE ISOLATED FROM EXISTING LINES IN ORDER TO ALLOW INDEPENDENT PRESSURE TESTING AND CHLORINATING FROM EXISTING SYSTEMS.
6. WATERMAINS AND/OR WATER SERVICES ARE TO HAVE A MINIMUM HORIZONTAL SPACING OF 3.0m FROM SEWERS AND 1.2m FROM THEMSELVES AND 2.0m FROM ALL OTHER SERVICES AND UTILITIES.
7. BUILDING SERVICE VALVES TO BE 2.0m OFF THE EDGE OF BUILDING SIDEWALK UNLESS OTHERWISE SHOWN ON PLANS AND MUST BE MECHANICALLY RESTRAINED AS PER CITY OF OTTAWA STANDARDS.
8. WATERMAINS SHALL BE INSTALLED AT A MINIMUM COVER OF 2.4m FROM PROPOSED GRADES AND MUST BE MAINTAINED AT ALL TIMES. DEFLECT WATERMAIN WHERE REQUIRED TO AVOID CONFLICTS WITH OTHER SERVICES ACCORDING TO CITY OF OTTAWA DETAIL W25 WITH A MINIMUM DISTANCE "D" OF 0.50m OTHERWISE PROVIDE THERMAL INSULATION AS PER CITY STD DWG W22 AND W23.
9. WATERMAINS MUST HAVE A MINIMUM VERTICAL CLEARANCE OF 0.5m OVER AND 0.50m UNDER SEWERS AND ALL OTHER UTILITIES WHEN CROSSING AS PER CITY STD DWG W25 AND W25.2.
10. ALL WATERMAIN STUBS SHALL BE TERMINATED WITH A 50mm PLUG AND BLOW OFF AS PER CITY OF OTTAWA STANDARDS UNLESS OTHERWISE INDICATED.
11. HYDRANTS SHALL BE TO CITY OF OTTAWA STANDARDS. THE CONTRACTOR IS TO CERTIFY IN WRITING TO THE ENGINEER/OWNER THAT THE HYDRANTS HAVE BEEN TESTED IN ACCORDANCE WITH CITY OF OTTAWA, OPSD AND LOCAL FIRE DEPARTMENT STANDARDS, AND THAT THEY ARE FULLY OPERATIONAL. PUMPER NOZZLE IS TO FACE THE FIRE ROUTE. HYDRANT LOCATION AS PER STD DWG W18; HYDRANT INSTALLATION AS PER STD DWG15.
12. PRIVATE FIRE HYDRANTS SHALL BE FLOW TESTED AND COLOUR CODED IN CONFORMANCE WITH THE LOCAL MUNICIPAL, REGIONAL AND FIRE DEPARTMENT REQUIREMENTS.
13. ALL DUCTILE IRON FITTINGS SHALL BE CATHODICALLY PROTECTED PER CITY OF OTTAWA STANDARDS.
14. ALL WATERMAINS SHALL BE PRESSURE TESTED AND BACTERIOLOGICALLY TESTED IN ACCORDANCE WITH ALL LOCAL MUNICIPAL, REGIONAL AND PROVINCIAL REQUIREMENTS. DISPOSAL OF CHLORINATED WATER TO BE IN ACCORDANCE WITH MUNICIPAL REQUIREMENTS.

COUNTERPOINT ENGINEERING INC. CONFORMANCE REQUIREMENTS

1. THE FOLLOWING ITEMS ARE TO BE PROVIDED TO COUNTERPOINT NO LESS THAN 10 WORKING DAYS PRIOR TO THE REQUEST FOR A LETTER OF GENERAL CONFORMANCE/FINAL CERTIFICATION. THE DOCUMENTS MUST INDICATE THAT THE SITE HAS BEEN CONSTRUCTED IN GENERAL CONFORMANCE WITH THE APPROVED DESIGN:
   - AS-CONSTRUCTED TOPOGRAPHIC/UNDERGROUND SURVEY COMPLETED BY A REGISTERED LAND SURVEYOR AS PER THE SPECIFICATIONS OUTLINED WITHIN THE CONTRACT DOCUMENT;
   - GEOTECHNICAL ENGINEER CERTIFICATION LETTER, WHICH INCLUDES SUB-GRADE COMPACTION RESULTS, BEDDING AND BACKFILL COMPACTION AND MATERIAL ACCEPTANCE, GRANULAR, ASPHALT, SITE CONCRETE MATERIAL ACCEPTANCE AND COMPACTION RESULTS;
   - CCTV INSPECTION OF FLUSHED STORM AND SANITARY PIPES AND STRUCTURES TO BE PROVIDED AT LEAST 10 DAYS PRIOR TO TOP WORKS PLACEMENT.
   - OIL/GRIT SEPARATOR MANUALS, RECORD OF INSPECTION AND CLEANING;
   - WATERMAIN PRESSURE, CHLORINATION AND BACTERIAL TEST RESULTS AND MUNICIPAL APPROVAL IF AVAILABLE.
2. SHOULD THE SUBMITTED MATERIALS INDICATE NON-CONFORMANCE OR DEFICIENCIES, THEY MUST BE ADDRESSED TO COUNTERPOINT'S SATISFACTION WITH AN UPDATED SUBMITTAL PRIOR TO ISSUANCE OF A LETTER OF GENERAL CONFORMANCE/FINAL CERTIFICATION.
3. COUNTERPOINT MUST ALSO COMPLETE ALL NECESSARY SITE INSPECTIONS AS OUTLINED IN THE APPROVED SERVICE PROGRAM, WITH ALL DEFICIENCIES ADDRESSED TO COUNTERPOINT'S SATISFACTION.

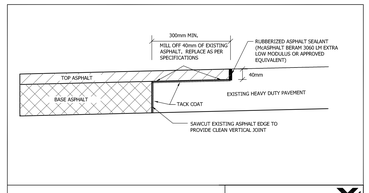

STEP JOINT DETAIL

counterpoint ENGINEERING
COUNTERPOINT ENGINEERING INC.
8385 Jane St., Suite 100, Vaughan, ON L4K 5Y2
SEPT 2009 | REV 1
SCALE N.T.S

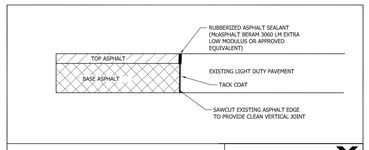

BUTT JOINT DETAIL

counterpoint ENGINEERING
COUNTERPOINT ENGINEERING INC.
8385 Jane St., Suite 100, Vaughan, ON L4K 5Y2
SEPT 2009 | REV 1
SCALE N.T.S

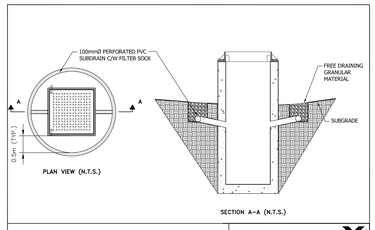

CATCHBASIN SUBDRAIN DETAIL

counterpoint ENGINEERING
COUNTERPOINT ENGINEERING INC.
8385 Jane St., Suite 100, Vaughan, ON L4K 5Y2 Phone 905.326.1404 Fax 905.326.1405
SEPT 2009 | REV 1 1
SCALE N.T.S.

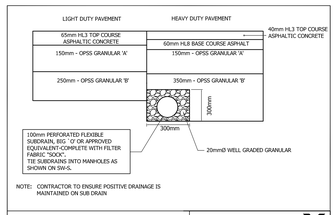

HEAVY DUTY / LIGHT DUTY ASPHALT INTERFACE SUBDRAIN

counterpoint ENGINEERING
COUNTERPOINT ENGINEERING INC.
8385 Jane St., Suite 100, Vaughan, ON L4K 5Y2
SEPT 2009 | REV 1
SCALE N.T.S.

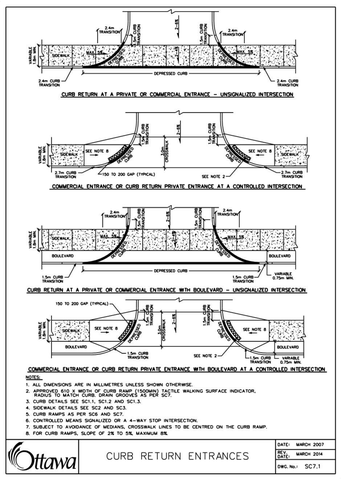

NOTES:
1. ALL DIMENSIONS ARE IN MILLIMETRES UNLESS SHOWN OTHERWISE.
2. APPROVED HLC-1 METHOD OF CURB RAMP (TORONTO TACTILE WALKING SURFACE INDICATOR, DETAIL NO. T-610) MAY BE SUBSTITUTED AS PER SC7.
3. CURB DETAILS SEE SC1.1, SC1.2 AND SC1.3.
4. SIDEWALK DETAILS SEE SC2 AND SC3.
5. CURB RAMPS AS PER SC6 AND SC7.
6. CONTROLLED MEANS SIGNALIZED OR A 4-WAY STOP INTERSECTION.
7. SUBJECT TO AVOIDANCE OF MECHANICAL CROSSWALK LINES TO BE CENTRED ON THE CURB RAMP.
8. FOR CURB RAMPS, SLOPE OF 2% TO 5%, MAXIMUM 8%.

Ottawa | CURB RETURN ENTRANCES | DATE: MARCH 2007 | SCALE: NTS | DATE: MARCH 2014 | DWG. No.: SC7.1

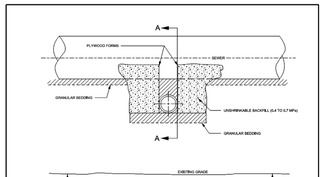

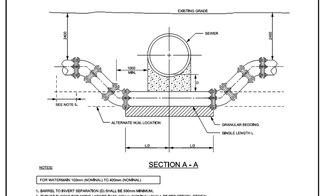

NOTES:

FOR WATERMAINS 100mm (NOMINAL) TO 400mm (NOMINAL)

1. BARREL TO INVERT SEPARATION (D) SHALL BE 500mm MINIMUM.
2. FOR 100mm (NOMINAL) AND 150mm (NOMINAL) SEWER SHALL BE PER SPECIAL DESIGN.
3. FOR 200mm (NOMINAL) AND 250mm (NOMINAL) SEWER, SEWER SHALL BE MIN. 22" SN.
4. CONCRETE FOR THRUST BLOCKS SHALL BE 20 MPa.
5. REFER TO WDS-P-08 RESTRAINED LENGTH REQUIREMENTS.
6. REFER TO WDS-P-09 WDS-P-09 FOR THRUST BLOCK REQUIREMENTS.
7. ALTERNATE SEAL LOCATION TO BE PROVIDED WHERE SEWER SHALL BE PER SPECIAL DESIGN.
8. DESIGNED TO MEET THE INTENT OF THE MOE WATERMAIN DESIGN CRITERIA JUNE 2010.

Ottawa | WATERMAIN CROSSING BELOW SEWER | DATE: MAY 2001 | SCALE: NTS | DATE: MARCH 2013 | DWG. No.: W25

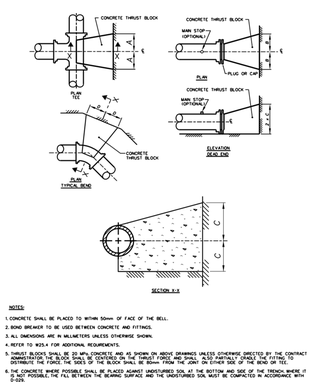

NOTES:
1. CONCRETE SHALL BE PLACED TO WITHIN 50mm OF FACE OF THE BELL.
2. BOND BREAKER TO BE USED BETWEEN CONCRETE AND FITTINGS.
3. ALL DIMENSIONS ARE IN MILLIMETERS UNLESS OTHERWISE SHOWN.
4. REFER TO W25.4 FOR ADDITIONAL REQUIREMENTS.
5. THRUST BLOCKS SHALL BE CO MPLISHCONCRETE AND AS SHOWN ON ABOVE DRAWINGS UNLESS OTHERWISE DIRECTED BY THE CONTRACT ADMINISTRATOR. THE BLOCK SHALL BE CENTERED ON THE THRUST FORCE AND SHALL ALSO PARTIALLY SPHERE THE FITTING TO DISTRIBUTE THE FORCE. THE SIDES OF THE BLOCK SHALL BE 50mm FROM THE JOINT ON EITHER SIDE OF THE BEND OR TEE.
6. THE CONCRETE WHERE POSSIBLE SHALL BE PLACED AGAINST UNDISTURBED SOIL AT THE BOTTOM AND SIDE OF THE TRENCH.WHERE IT IS NOT POSSIBLE THE FILL BETWEEN THE BEARING SURFACE AND THE UNDISTURBED SOIL MUST BE COMPACTED IN ACCORDANCE WITH D-152.
7. EXCEPT FOR THE ADDITION OF WATER,CONCRETE FOR THRUST BLOCKS SHALL COME PREMIXED FROM CONCRETE SUPPLIER, AS "READY MIX"FROM A CONCRETE TRUCK ON SITE. MIXING OF CEMENT, SAND AND AGGREGATE ETC.BY THE CONTRACTOR, FOR THE PURPOSE OF MAKING CONCRETE THRUST BLOCKS/ ANCHORS WILL NOT BE ACCEPTED.

Ottawa | CONCRETE THRUST BLOCKS FOR PVC AND DI PIPE 400mm AND UNDER | DATE: MAY 2001 | SCALE: NTS | DATE: MARCH 2016 | DWG. No.: W25.3

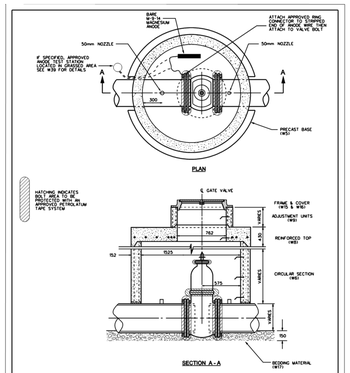
BARE W.S.S. MAGNESIUM ANODE
ATTACH APPROVED BING CONNECTOR TO STAINLESS STEEL BOLT THEN ATTACH TO VALVE BOLT
50mm NOZZLE
IF SPECIFIED, APPROVED HIGH TEST STATION MONITORING WIRE AREA - SEE W25 FOR DETAILS
50mm NOZZL