1. GENERAL

1.1 USE BAR SCALE TO CONFIRM ACTUAL PLOT SCALE. EXISTING AND NEW ELEVATIONS AND INVERTS SHOWN ARE GEODETIC AND ARE IN METERS. ALL PIPE DIMENSIONS ARE IN MILLIMETERS UNLESS OTHERWISE NOTED.
1.2 UNLESS OTHERWISE STATED "ENGINEER" REFERS TO D. B. GRAY ENGINEERING INC.
1.3 EXISTING ELEVATIONS AND LOCATIONS, INVERTS AND SIZES OF EXISTING SERVICES & UTILITIES ARE NOT NECESSARILY SHOWN ON PLAN AND THOSE SHOWN ARE DERIVED FROM AVAILABLE INFORMATION AND MUST BE CONFIRMED ON SITE BEFORE COMMENCING CONSTRUCTION. REPORT ANY DIFFERENCES TO ENGINEER. UNDERGROUND LOCATES (INCLUDING ONTARIO ONE CALL: 1-800-400-2255) SHALL BE CONDUCTED PRIOR TO THE COMMENCEMENT OF ANY EXCAVATION.
1.4 SITE BOUNDARIES AND EXISTING GRADES AND OTHER FEATURES DERIVED FROM TOPOGRAPHIC SURVEY PREPARED BY FARLEY, SMITH & DENIS SURVEYING LTD. JOB No. 180-20. IT IS THE RESPONSIBILITY OF THE USER OF THE SURVEY PLAN AND THESE DRAWINGS TO VERIFY THAT THE JOB BENCHMARK HAS NOT BEEN ALTERED OR DISTURBED AND THAT ITS RELATIVE ELEVATION AND DESCRIPTION AGREE WITH THE INFORMATION SHOWN ON SURVEY PLAN AND THESE DRAWINGS.
1.5 REFER TO ARCHITECTURAL AND LANDSCAPE SITE PLANS FOR EXACT LOCATIONS OF BUILDINGS, PAVED AREAS, SIDEWALKS, PLANTERS ETC.
1.6 REFERENCE THE LATEST REVISION AND ALL ADDENDUMS OF THE GEOTECHNICAL INVESTIGATION BY KOLLAARD ASSOCIATES PROJECT #20016. SITE PREPARATION INCLUDING BUILDING SUB-GRADE PREPARATION AND EXCAVATION AND BACKFILLING, INCLUDING COMPACTION OF MATERIALS, SHALL CONFORM TO THE GEOTECHNICAL INVESTIGATION TO THE SATISFACTION OF THE GEOTECHNICAL ENGINEER.
1.7 DRAWINGS ARE TO BE READ IN CONJUNCTION WITH SERVICING BRIEF & STORM WATER MANAGEMENT REPORT No. 20069 PREPARED BY D. B. GRAY ENGINEERING INC.
1.8 REINSTATE ADJACENT PROPERTIES TO PRE-CONSTRUCTION CONDITIONS.
1.9 REINSTATE CITY PROPERTIES TO CITY STANDARDS AND TO CITY OF OTTAWA'S SATISFACTION.
1.10 ALL RELEVANT WORK SHALL BE DONE IN ACCORDANCE WITH CURRENT CITY STANDARDS AND SPECIFICATIONS.
1.11 ONTARIO PROVINCIAL STANDARDS & SPECIFICATIONS WILL APPLY WHERE NO CITY STANDARDS ARE AVAILABLE.
1.12 ALL PROPOSED RETAINING WALLS SHALL BE SETBACK A MINIMUM 0.15m FROM PROPERTY LINE. ALL PROPOSED RETAINING WALLS GREATER THAN 1.0m IN HEIGHT SHALL BE DESIGN BY A PROFESSIONAL ENGINEER REGISTERED IN ONTARIO.

2. EROSION AND SEDIMENT CONTROL PLAN

2.1 THE EROSION AND SEDIMENT CONTROL PLAN IS A "LIVING DOCUMENT" AND SHALL BE REVISED IN THE EVENT THE SPECIFIED CONTROL MEASURES ARE NOT SUFFICIENT. THE CONTRACTOR SHALL IMPLEMENT BEST MANAGEMENT PRACTICES TO PROVIDE PROTECTION OF THE AREA DRAINAGE SYSTEM AND THE RECEIVING WATER COURSE DURING CONSTRUCTION ACTIVITIES. THIS INCLUDES LIMITING THE AMOUNT OF EXPOSED SOIL, USING SEDIMENT CAPTURE FILTER SOCK INSERTS IN CATCH BASINS AND MANHOLES AND INSTALLING SILT FENCES AND OTHER EFFECTIVE SEDIMENT TRAPS. THE CONTRACTOR ACKNOWLEDGES THAT FAILURE TO IMPLEMENT APPROPRIATE EROSION AND SEDIMENT CONTROL MEASURES MAY BE SUBJECT TO PENALTIES IMPOSED BY ANY APPLICABLE REGULATORY AGENCY. SPECIFICALLY THE CONTRACTOR SHALL INSTALL THE FOLLOWING CONTROL MEASURES AND INSPECT, MAINTAIN AND REMOVE THE CONTROL MEASURES.
2.2 PRIOR TO COMMENCEMENT OF CONSTRUCTION AT ALL MUNICIPAL CATCH BASINS ADJACENT TO THE SITE AND AT ANY MANHOLES OR CATCH BASINS THAT WILL RECEIVE DISCHARGE FROM DE-WATERING OPERATIONS AND ALL NEW CATCH BASINS AS THEY ARE INSTALLED: INSTALL SEDIMENT CAPTURE FILTER SOCK INSERTS (TERRAFIX GEOSYNTHETICS INC SILTSACK OR APPROVED EQUAL). INSPECT AT THE END OF EACH DAY AND AFTER EACH RAINFALL. REMOVE SEDIMENT AS RECOMMENDED BY THE MANUFACTURER. IMMEDIATELY REPAIR OR REPLACE ANY DAMAGED FILTER SOCK INSERTS. DO NOT REMOVE UNTIL CONSTRUCTION IS COMPLETE.
2.3 ANY MATERIAL DEPOSITED ON PUBLIC ROAD SHALL BE REMOVED BY SWEEPING AND SHOVELING OR VACUUMING AND DISPOSING SEDIMENT IN A CONTROLLED AREA. DO NOT SWEEP OR HOSE MATERIAL INTO ANY STORMWATER CONVEYANCE SYSTEM.
2.4 CONSTRUCTION IS CONSIDERED COMPLETE WHEN THE FOLLOWING CONDITIONS HAVE BEEN MET:
a. ALL STRUCTURES HAVE BEEN BUILT.
b. ALL HARD SURFACES HAVE BEEN CONSTRUCTED.
c. ALL PROPOSED GRASSED AREAS ARE EITHER SODDED OR HAVE A FULL COVERAGE OF WELL ESTABLISHED TURF AND HAVE HAD A MINIMUM OF ONE FULL GROWING SEASON (MAY 15TH TO SEPTEMBER 15TH).
d. THERE ARE NO AREAS OF EXPOSED EARTH.
e. ALL STOCKPILED MATERIALS HAVE BEEN REMOVED.
2.5 REMOVE EROSION AND SEDIMENT CONTROL MEASURES WHEN CONSTRUCTION IS COMPLETE.

3. GRADING & DRAINAGE

3.1 NEW GRADES TO MATCH EXISTING AT PROPERTY LINE. NO EXCESS DRAINAGE WILL BE DIRECTED TOWARDS THE ADJACENT PROPERTIES DURING AND AFTER CONSTRUCTION. THERE WILL BE NO ALTERATION TO EXISTING GRADE AND DRAINAGE PATTERNS ON PROPERTY LINE.
3.2 ALL AREAS SHALL BE GRADED TO ENSURE ADEQUATE DRAINAGE AWAY FROM BUILDINGS TO CATCH BASINS, SWALES, DITCHES AND OTHER APPROVED DISPOSAL AREAS. GRADING SHALL BE GRADUAL BETWEEN FINISHED SPOT ELEVATIONS SHOWN ON DRAWINGS TO PREVENT PONDING (OTHER THAN PONDING REQUIRED FOR STORMWATER MANAGEMENT).
3.3 WHETHER RESULT OF POOR WORKMANSHIP OR DAMAGE: DEFECTIVE GRADING SHALL BE CORRECTED. PROMPTLY MAKE GOOD OTHER CONTRACTOR'S WORK DAMAGED BY SUCH CORRECTIONS.

4. SITE SERVICES

4.1 EXISTING WATER SERVICE CONNECTIONS TO BE DECOMMISSIONED SHALL BE BLANKED AT CITY WATERMAIN BY CITY FORCES. CONTRACTOR SHALL PROVIDED EXCAVATION, BEDDING AND REINSTATEMENT. EXISTING SEWER SERVICE CONNECTIONS SHALL BE DECOMMISSIONED AS PER CITY OF OTTAWA STANDARDS S11.4.
4.2 CONNECTION TO WATERMAIN BY CITY OF OTTAWA FORCES, CONTRACTOR SHALL PROVIDE EXCAVATION, BACKFILL AND REINSTATEMENT.
4.3 WATER METER SHALL BE INSTALLED AS PER CITY OF OTTAWA DWG. No. W31.
4.4 ALL WATER SERVICE MATERIALS AND CONSTRUCTION METHODS TO CITY OF OTTAWA STANDARDS AND ONTARIO PROVINCIAL STANDARDS SPECIFICATIONS (OPSS & OPSD). WATER SERVICE MATERIALS SHALL BE COPPER ASTM B88 TYPE "K" SOFT.
4.5 PROVIDE A MINIMUM 2.4 m COVER OVER WATER SERVICE CONNECTION. WHERE THE MINIMUM COVER IS NOT POSSIBLE INSULATE AS PER CITY OF OTTAWA DWG. No. W22. WHERE LESS THAN 2.4 m CLEARANCE FROM AN OPEN STRUCTURE (EG. MANHOLES & CATCH BASINS) PLACE INSULATION AROUND WATER SERVICE CONNECTIONS AS PER CITY OF OTTAWA DWG. No. W23.
4.6 WATER SERVICE CONNECTIONS INSTALLED PARALLEL TO A SEWER CONNECTION OF A SEWER SHALL BE CONSTRUCTED OF A SINGLE RUN OF PIPE WITH NO JOINTS OR FITTINGS BETWEEN THE WATERMAIN AND CURB STOP AND BETWEEN THE CURB STOP AND THE INSIDE FACE OF THE BUILDING.
4.7 WATER SERVICE CONNECTIONS (50mm OR LESS) SHALL CROSS THE SEWER AS PER CITY OF OTTAWA DRAWING No. W38. PROVIDE A MINIMUM 300mm BARREL TO BARREL VERTICAL SEPARATION.
4.8 THE SANITARY BUILDING DRAIN SHALL BE INSTALLED WITH A FULL-PORT BACKWATER VALVE TO CITY OF OTTAWA STANDARDS AND TO CITY OF OTTAWA DWG. NO. S14.1 OR S14.2. THE BACKWATER VALVE SHALL BE INSTALLED SO THAT ALL PLUMBING FIXTURES ABOVE THE EXTERIOR GRADE ELEVATION DRAINS TO THE DOWNSTREAM SIDE OF THE VALVE AND ALL FIXTURES BELOW THE EXTERIOR GRADE ELEVATION DRAINS TO THE UPSTREAM SIDE OF THE VALVE.
4.9 THE DRAIN SERVING THE FOUNDATION DRAINS SHALL BE INSTALLED WITH A BACKWATER VALVE TO CITY OF OTTAWA STANDARDS AND TO CITY OF OTTAWA DWG. NO. S14.
4.10 SEWER SERVICE LATERALS SHALL HAVE A MINIMUM 2.0m OF COVER OR SHALL BE INSULATED AS PER CITY OF OTTAWA STANDARD DRAWING W22.
4.11 INSTALL CLEANOUTS ON THE STORM BUILDING DRAIN AND SANITARY BUILDING DRAIN AS CLOSE AS PRACTICAL TO THE WHERE THE SANITARY AND STORM DRAINS LEAVE THE BUILDING.
4.12 CONNECT PROPOSED SANITARY SEWER SERVICE CONNECTION TO EXISTING MUNICIPAL SANITARY SEWER AS PER CITY OF OTTAWA DWG No. S11 (RIGID MAIN SEWER).
4.13 CONNECT PROPOSED STORM SEWER SERVICE CONNECTION TO EXISTING MUNICIPAL STORM SEWER AS PER CITY OF OTTAWA DWG No. S11 (RIGID MAIN SEWER).
4.14 ALL SEWER MATERIALS AND CONSTRUCTION METHODS TO CITY OF OTTAWA STANDARDS AND ONTARIO PROVINCIAL STANDARDS SPECIFICATIONS (OPSS & OPSD). SEWER MATERIAL SHALL BE PVC SDR-35 (SDR-28 FOR DIAMETERS 150mm OR LESS) AND SHALL CONFORM TO CSA B182.2 AND SHALL HAVE BELL AND SPIGOT JOINTS WITH RUBBER GASKETS.
4.15 ROOF DRAINS SHALL BE FLOW CONTROL TYPE EACH INSTALLED WITH A WEIR WITH A PARABOLIC SLOT, EACH SLOT SHALL RELEASE 5 USgpm/inch. OPENING AT TOP OF FLOW CONTROL WEIR SHALL BE A MINIMUM 50mm IN DIAMETER: WATTS ROOF DRAIN WITH WATTS ACCUTROL WEIR RD-100-A1 OR EQUAL. PRIOR TO INSTALLATION SUBMIT SHOP DRAWING TO ENGINEER FOR APPROVAL.

5. CONSTRUCTION:

5.1 PRIOR TO COMMENCING WORK:
A. OBTAIN AND PAY FOR ALL NECESSARY PERMITS AND APPROVALS FROM THE AUTHORITIES.
B. SIZE, DEPTH AND LOCATION OF EXISTING SERVICES, UTILITIES AND STRUCTURES AS INDICATED ON THE DRAWINGS ARE FOR GUIDANCE ONLY. ALL EXISTING SERVICES, UTILITIES AND STRUCTURES ARE NOT NECESSARILY SHOWN ON THE DRAWINGS. COMPLETENESS AND ACCURACY ARE NOT GUARANTEED. NOTIFY ALL APPLICABLE OWNERS, UTILITY COMPANIES AND AUTHORITIES HAVING JURISDICTION OF PROPOSED WORK AND LOCATE AND CLEARLY IDENTIFY ALL EXISTING SERVICES, UTILITIES AND STRUCTURES ON AND ADJACENT TO THE SITE. UNDERGROUND LOCATES (INCLUDING ONTARIO ONE CALL: 1-800-400-2255) SHALL BE CONDUCTED PRIOR TO THE COMMENCEMENT OF ANY EXCAVATION. CONFIRM LOCATIONS OF BURIED SERVICES AND UTILITIES BY CAREFUL TEST EXCAVATIONS AND REPORT ANY DIFFERENCES TO THE ENGINEER.
C. EXISTING GRADE ELEVATIONS INDICATED ON THE DRAWINGS ARE FOR GUIDANCE ONLY. COMPLETENESS AND ACCURACY ARE NOT GUARANTEED. CONFIRM EXISTING GRADE ELEVATIONS AND REPORT ANY DIFFERENCES TO THE ENGINEER.
D. COORDINATE AND SCHEDULE WORK WITH THE AUTHORITIES AND OTHER TRADES.
E. SCHEDULE WORK TO PROVIDE THE MINIMUM DISRUPTION TO SERVICES.
5.2 MAINTAIN AND PROTECT FROM DAMAGE, SERVICES, UTILITIES AND STRUCTURES ENCOUNTERED.
5.3 PROTECT EXISTING BUILDINGS, TREES AND OTHER PLANTS, LAWNS, FENCING, SERVICE POLES, WIRES, PAVEMENT, SURVEY BENCH MARKS AND MONUMENTS AND OTHER SURFACE FEATURES FROM DAMAGE WHILE WORK IS IN PROGRESS. DO NOT DISTURB SOIL WITHIN BRANCH SPREAD OF TREES OR SHRUBS THAT ARE TO REMAIN.
5.4 PROVIDE TRAFFIC CONTROL AND SAFETY MEASURES INCLUDING ANY NECESSARY PERSONNEL AND THE SUPPLY, INSTALLATION, REMOVAL AND REPLACEMENT OF ALL NECESSARY SIGNAGE AND BARRIERS, AS REQUIRED BY THE AUTHORITIES. IF APPLICABLE, PROVIDE TRAFFIC MANAGEMENT PLAN AS PER CITY OF OTTAWA REQUIREMENTS.
5.5 REMOVE OBSTRUCTIONS, ICE AND SNOW, FROM SURFACES TO BE EXCAVATED.
5.6 CUT PAVEMENT AND / OR SIDEWALK NEATLY ALONG LIMITS OF PROPOSED EXCAVATION IN ORDER THAT SURFACE MAY BREAK EVENLY AND CLEANLY.
5.7 COORDINATE AND PAY FOR GEOTECHNICAL INSPECTIONS AND COMPACTION TESTS OF SUB-GRADE, PIPE BEDDING AND EACH LAYER OF SURROUND MATERIAL, BACKFILL, SUB-BASE, BASE AND ASPHALT TO THE SATISFACTION OF THE GEOTECHNICAL CONSULTANT AND ENGINEER. SUBMIT GEOTECHNICAL INSPECTIONS AND COMPACTION REPORTS TO ENGINEER FOR REVIEW.
5.8 CUT AND FILL AS NECESSARY TO ACHIEVE THE REQUIRED SUB-GRADE ELEVATION. DISPOSE OF SURPLUS AND UNSUITABLE EXCAVATED MATERIAL OFF SITE. FILL MATERIAL AND THE PLACEMENT AND COMPACTION OF THE FILL MATERIAL AS PER THE GEOTECHNICAL REPORT AND TO THE SATISFACTION OF THE GEOTECHNICAL CONSULTANT. STOCKPILE GRANULAR AND FILL MATERIALS IN MANNER TO PREVENT SEGREGATION AND PROTECT FROM CONTAMINATION.
5.9 EXCAVATION, TRENCHING & BACKFILL:
A. SHORE AND BRACE EXCAVATIONS, PROTECT SLOPES AND BANKS AND PERFORM ALL WORK IN ACCORDANCE WITH ONTARIO REGULATION 213/91 UNDER THE ONTARIO OCCUPATIONAL HEALTH AND SAFETY ACT AND OTHER AUTHORITIES HAVING JURISDICTION.
B. KEEP EXCAVATIONS FREE OF WATER WHILE WORK IS IN PROGRESS. PROTECT OPEN EXCAVATIONS AGAINST FLOODING AND DAMAGE DUE TO SURFACE RUN-OFF.
C. EXCAVATION MUST NOT INTERFERE WITH BEARING CAPACITY OF ADJACENT FOUNDATIONS.
D. DO NOT OBSTRUCT FLOW OF SURFACE DRAINAGE OR NATURAL WATERCOURSES.
E. EXCAVATE TO LINES, GRADES, ELEVATIONS AND DIMENSIONS AS INDICATED.
F. EARTH BOTTOMS OF EXCAVATIONS TO BE UNDISTURBED SOIL, LEVEL, FREE FROM LOOSE, SOFT OR ORGANIC MATTER.
G. ALL STRUCTURES WITHIN PAVED AREAS SHALL HAVE 4:1 FROST TAPERS FROM FROST LINE TO SUB-GRADE.
H. CORRECT OVER-EXCAVATION WITH GRANULAR A COMPACTED TO NOT LESS THAN 95% OF CORRECTED MAXIMUM DRY DENSITY.
I. SUB-GRADE AND AREAS TO BE BACKFILLED TO BE FREE FROM DEBRIS, SNOW, ICE, WATER AND FROZEN GROUND.
J. DO NOT USE BACKFILL MATERIAL WHICH IS FROZEN OR CONTAINS ICE, SNOW OR DEBRIS.
K. BEDDING AND SURROUND MATERIAL FOR SEWERS SHALL BE OPSS GRANULAR A. BEDDING AND SURROUND MATERIAL FOR WATERMAIN AND WATER SERVICE CONNECTIONS SHALL BE OPSS GRANULAR A OR OPSS GRANULAR M. RE-CYLCLED GRANULAR MATERIALS ARE NOT PERMITTED.
L. DO NOT USE BEDDING, SURROUND OR BACKFILL MATERIAL WHICH IS FROZEN OR CONTAINS ICE, SNOW OR DEBRIS.
M. PIPE BEDDING SHALL BE 150mm THICK. SHAPE BED TRUE TO GRADE AND TO PROVIDE CONTINUOUS, UNIFORM BEARING SURFACE FOR PIPE.
N. PLACE SURROUND MATERIAL AROUND PIPES TO FULL WIDTH OF TRENCH AND TO 300mm ABOVE PIPES.
O. PLACE BEDDING AND SURROUND MATERIAL IN UNIFORM LAYERS NOT EXCEEDING 150mm COMPACTED THICKNESS. PLACE FILL AND BACKFILL MATERIAL IN UNIFORM LAYERS NOT EXCEEDING 300mm COMPACTED THICKNESS.
P. COMPACT EACH LAYER TO 95% OF CORRECTED DRY DENSITY BEFORE PLACING SUCCEEDING LAYER.
Q. DO NOT BACKFILL AROUND OR OVER CAST-IN-PLACE CONCRETE WITHIN 24 HOURS AFTER PLACING OF CONCRETE.
R BACKFILL MATERIALS WITHIN 1.8m OF PROPOSED GRADE SHALL MATCH THE MATERIALS EXPOSED ON THE TRENCH WALLS. BACKFILL BELOW 1.8m OF THE PROPOSED CAN CONSIST OF EITHER ACCEPTABLE NATIVE MATERIAL; ROCK; OR IMPORTED GRANULAR MATERIAL CONFORMING TO OPSS GRANULAR B TYPE I OR II. ANY ORGANIC SOILS OR TOPSOIL, IF ENCOUNTERED, SHALL BE REMOVED FROM THE EXCAVATION. IF ROCK IS USED AS BACKFILL IT SHALL BE WELL SHATTERED AND GRADED AND 200mm OR SMALLER IN DIAMETER. TO PREVENT INGRESS OF FINE MATERIAL INTO VOIDS IN THE ROCK FILL, THE UPPER SURFACE OF THE ROCK FILL SHALL BE COVERED WITH 150mm LAYER OF COMPACTED, WELL GRADED CRUSHED STONE PLACED ON GEOTEXTILE FABRIC.
5.10 PIPES:
A. HANDLE PIPE USING METHODS APPROVED BY MANUFACTURER.
B. LAY, CUT AND JOIN PIPES IN ACCORDANCE WITH MANUFACTURER'S RECOMMENDATIONS.
C. USE ONLY FITTINGS AS RECOMMENDED BY PIPE MANUFACTURER.
D. LAY PIPES ON PREPARED BED, TRUE TO LINE AND GRADE AND ENSURE BARREL OF EACH PIPE IS IN CONTACT WITH SHAPED BED THROUGHOUT ITS FULL LENGTH, FREE OF SAGS OR HIGH POINTS.
E. DO NOT EXCEED MAXIMUM JOINT DEFLECTION RECOMMENDED BY PIPE MANUFACTURER.
F. WHENEVER WORK IS SUSPENDED, INSTALL REMOVABLE WATERTIGHT BULKHEAD AT OPEN END OF LAST PIPE LAID TO PREVENT ENTRY OF FOREIGN MATERIALS.
G. WHEN STOPPAGE OF WORK OCCURS, BLOCK PIPES TO PREVENT CREEP DURING DOWN TIME. MAKE WATERTIGHT CONNECTIONS TO MANHOLES.
H. JOINTS SHALL BE STRUCTURALLY SOUND AND WATERTIGHT.
I. REPAIR OR REPLACE PIPE, PIPE JOINT OR BEDDING FOUND DEFECTIVE.
5.11 SEWERS AND SEWER SERVICES:
A. CONSTRUCT SEWER TRENCHES AS PER CITY DWG S6 & S7.
B. RIGID STRUCTURES, INSTALL PIPE JOINTS NOT MORE THAN 1.2M FROM SIDE OF STRUCTURE.
C. MAINTAIN EXISTING SEWAGE FLOWS DURING CONSTRUCTION.
D. PERFORM FIELD TESTS FOR QUALITY CONTROL OF ALL SANITARY SEWERS. SPECIFICALLY, THE LEAKAGE TESTING SHALL BE COMPLETED IN ACCORDANCE WITH OPSS 410. REPAIR AND RETEST SEWER LINE AS REQUIRED. REPAIR VISIBLE LEAKS REGARDLESS OF TEST RESULTS.
E. CONDUCT TWO CCTV INSPECTIONS OF SEWERS. FIRST INSPECTION AFTER COMPLETION OF CONSTRUCTION. SECOND INSPECTION IMMEDIATELY PRIOR TO END OF WARRANTY PERIOD. A PAN AND TILT CAMERA SHALL BE USED. REPAIR SEWER LINE AS REQUIRED. SUBMIT REPORTS AND DVDS TO ENGINEER.
F. CONDUCT DYE TEST OF SANITARY SEWERS AND COORDINATE WITH ENGINEER. DYE TEST SHALL BE WITNESSED BY ENGINEER.
5.12 MAINTAIN RECORD DRAWINGS AND RECORD ACCURATELY DEVIATIONS FROM THE ORIGINAL CONTRACT DOCUMENTS CAUSED BY SITE CONDITIONS AND CHANGES MADE BY CHANGE ORDER OR ADDITIONAL INSTRUCTIONS. UPDATE DAILY AND MAKE AVAILABLE ON-SITE FOR REVIEW THROUGHOUT THE CONSTRUCTION PERIOD. MARK CHANGES IN RED INK. RECORD DRAWINGS SHALL INCLUDE BUT NOT NECESSARILY LIMITED TO CHANGES OF DIMENSION AND DETAIL; CHANGES TO GRADE ELEVATIONS; AND HORIZONTAL AND VERTICAL LOCATIONS OF UNDERGROUND SERVICES, UTILITIES AND APPURTENANCES REFERENCED TO A PERMANENT SURFACE STRUCTURE. SUBMIT DRAWINGS TO ENGINEER AT THE END OF CONSTRUCTION.
5.13 MONOLITHIC CONCRETE CURB AND SIDEWALK SHALL BE CONSTRUCTED TO CITY OF OTTAWA DRAWING No. SC2.
5.14 WHETHER RESULT OF POOR WORKMANSHIP, USE OF DEFECTIVE PRODUCTS OR DAMAGE: DEFECTIVE PORTIONS OF CURBS, SIDEWALK AND ASPHALT SHALL BE CORRECTED OR REMOVED AND REPLACED. PROMPTLY MAKE GOOD OTHER CONTRACTOR'S WORK DAMAGED BY SUCH REMOVALS OR REPLACEMENTS.
5.15 REINSTATE ALL AREAS DISTURBED BY CONSTRUCTION. REINSTATE PAVEMENTS, CURBS AND SIDEWALKS, TO THICKNESS, STRUCTURE AND ELEVATION WHICH EXISTED BEFORE CONSTRUCTION. REINSTATE LANDSCAPED AREAS TO THE CONDITION AND ELEVATION WHICH EXISTED BEFORE CONSTRUCTION.
5.16 CLEAN AND REINSTATE AREAS AFFECTED BY THE WORK.

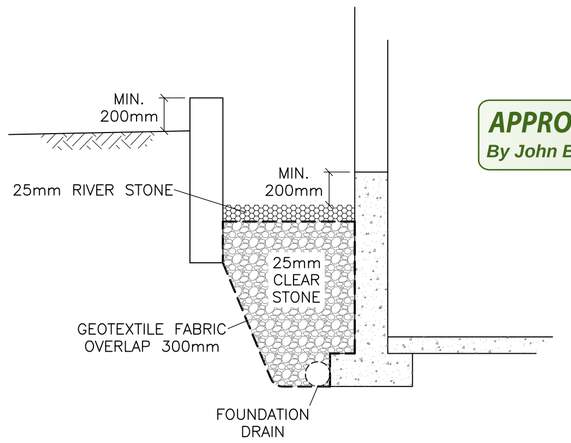

WINDOW WELL DRAINAGE DETAIL
(N.T.S)

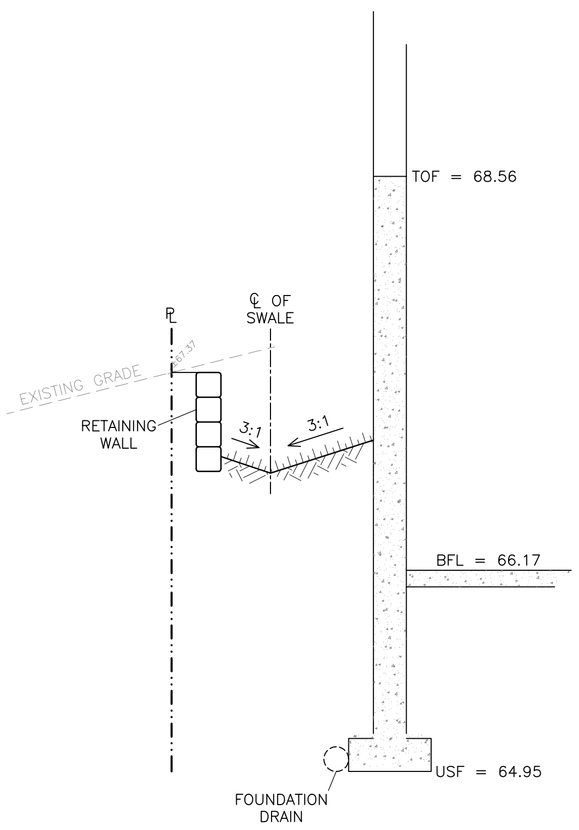

SECTION A-A
(N.T.S)

INSTALL A MINIMUM OF 2 SCUPPERS, EACH A MINIMUM 365mm WIDE. BOTTOM OF SCUPPERS SHALL BE 150mm ABOVE ROOF DRAINS (REFER TO ARCHITECTURAL FOR EXACT LOCATIONS AND DETAILS). ROOF SHALL BE DESIGNED TO CARRY THE LOAD OF WATER HAVING A 50mm DEPTH AT SCUPPER OR 200mm DEPTH AT ROOF DRAIN (REFER TO STRUCTURAL).

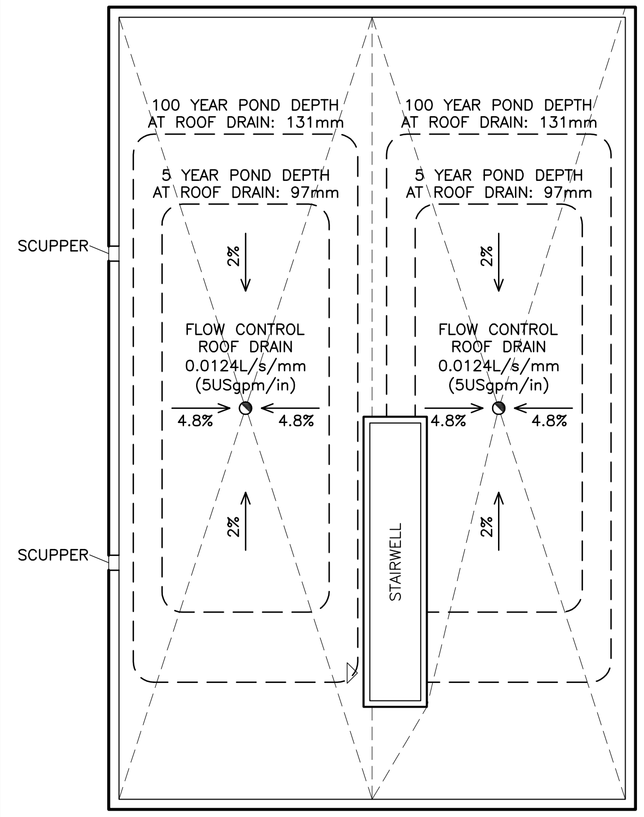

ROOF PLAN
1:100

WATER SERVICE PROFILE TABLE

MATERIAL:
38mm COPPER ASTM B88 TYPE "K" SOFT

STATION	DESCRIPTION	GRADE ELEVATION	TOP OF PIPE	DEPTH OF COVER	NOTES
0+00.0	TVS CONNECTION TO 400mm MUNICIPAL WATERMAIN AS PER CITY OF OTTAWA DRAWING No. W33	±66.27	±63.95	±2.32	–
0+02.2	–	±66.22	±63.82	2.40	CROSSING ABANDONED 150 WM
0+04.4	–	66.38	63.98	2.40	CROSSING HYDRO
0+06.1	–	66.43	64.03	2.40	CROSSING GAS
0+08.3	38mm CURB STOP & SERVICE POST TO CITY OF OTTAWA STANDARDS	66.48	64.08	2.40	ON PROPERTY LINE
0+11.9	–	66.52	64.12	2.40	ENTRY INTO BUILDING

APPROVED
By John Bernier at 1:12 pm, Oct 06, 2021

JOHN BERNIER
PLANNER
PLANNING, INFRASTRUCTURE & ECONOMIC DEVEVELOPMENT DEPARTMENT, CITY OF OTTAWA

KEY PLAN

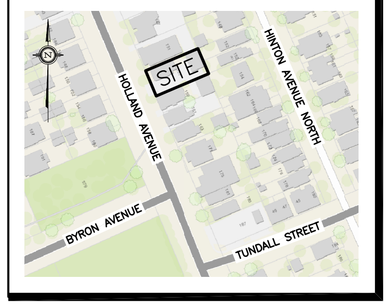

No.	DATE	REVISION
7	JUL 15-21	RE-ISSUED FOR APPROVAL
6	JUN 30-21	RE-ISSUED FOR APPROVAL
5	APR 29-21	RE-ISSUED FOR APPROVAL
4	MAR 30-21	RE-ISSUED FOR APPROVAL
3	NOV 10-20	ISSUED FOR APPROVAL
2	OCT 22-20	ISSUED FOR COORDINATION
1	SEP 2-20	PRELIMINARY

D. B. GRAY ENGINEERING INC.
Stormwater Management - Grading & Drainage - Storm & Sanitary Sewers - Watermains
700 Long Point Circle 613-425-8044
Ottawa, Ontario d.gray@dbgrayengineering.com

Project
PROPOSED 3-STOREY 12-UNIT APARTMENT BUILDING
157 HOLLAND AVENUE
OTTAWA, ONTARIO

Drawing Title
NOTES, DETAILS & SCHEDULES

Engineer's Seal
LICENSED PROFESSIONAL ENGINEER
D.B. GRAY
17016502
JUL 15-21
PROVINCE OF ONTARIO
NOT VALID UNLESS SIGNED & DATED

Drawn	D.B.G
Hor. Scale	
Vert. Scale	
Date	SEP 2-20
Job No.	20074

Drawing No.
C-3
of 4

D07-12-20-0154

#18313