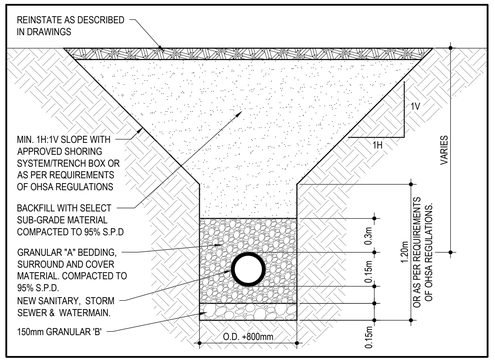

1 C5.1 TYPICAL TRENCH DETAIL
SCALE: N.T.S.

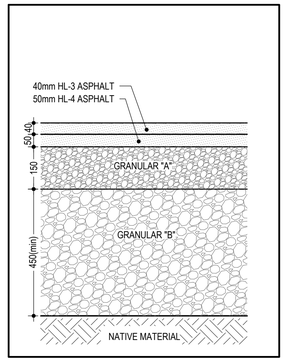

2 C5.1 HEAVY DUTY ASPHALT
SCALE: N.T.S.

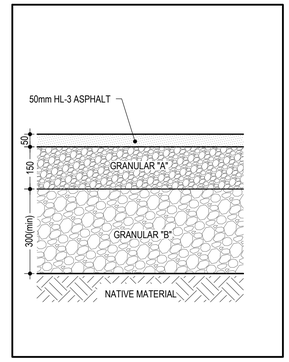

3 C5.1 LIGHT DUTY ASPHALT
SCALE: N.T.S.

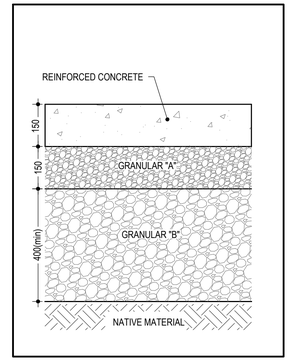

4 C5.1 CONCRETE PAD STRUCTURE
SCALE: N.T.S.

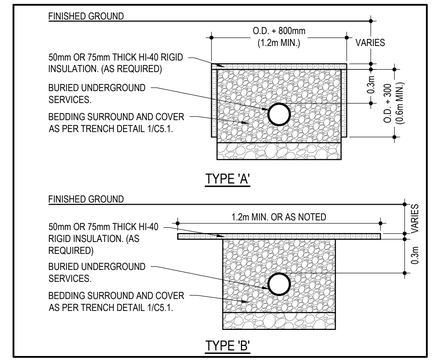

5 C5.1 FROST PROTECTION DETAIL
SCALE: N.T.S.

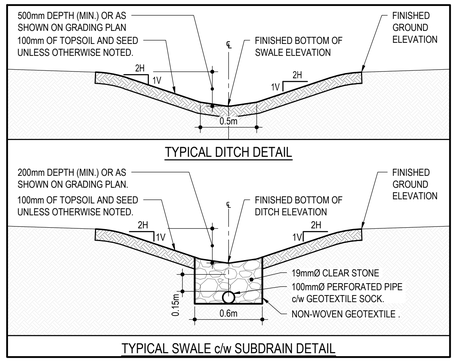

6 C5.1 TYPICAL DITCH/SWALE DETAIL
SCALE: N.T.S.

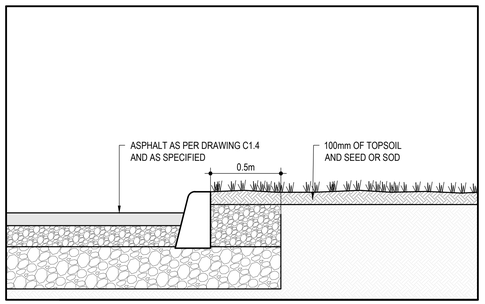

7 C5.1 TYPICAL ASPHALT EDGE DETAIL (WITH CURB)
SCALE: N.T.S.

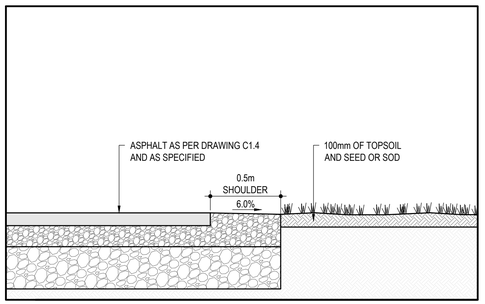

8 C5.1 TYPICAL ASPHALT EDGE DETAIL (WITHOUT CURB)
SCALE: N.T.S.

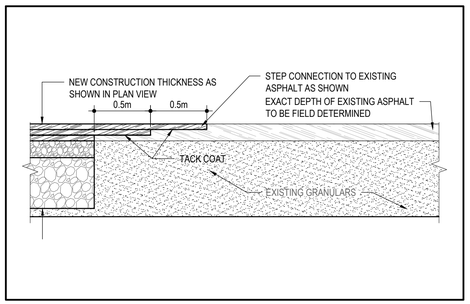

9 C5.1 TYPICAL STEP CONNECTION DETAIL
SCALE: N.T.S.

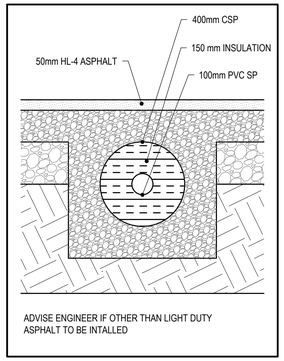

10 C5.1 NESTED PIPE DETAIL
SCALE: N.T.S.

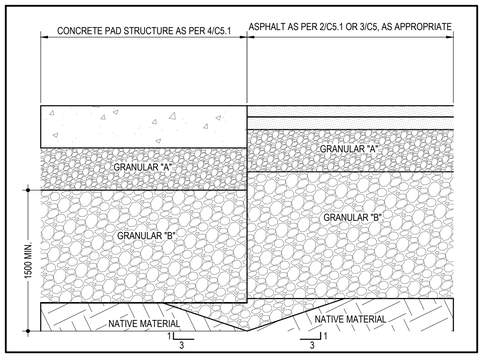

11 C5.1 FROST TAPER
SCALE: N.T.S.

WSP
1345 ROSEMOUNT AVENUE
CORNWALL, ONTARIO
CANADA K6J 3E5
PHONE: 613-933-5602 FAX: 613-936-0335
WWW.WSPGROUP.COM

CONSULTANT:

SEAL:

LICENSED PROFESSIONAL ENGINEER
M. J. JANS
100226211
2020/07/15
PROVINCE OF ONTARIO

CLIENT:

MR. ABDU EL-ARAB

CLIENT REF. #: --

PROJECT:

GAS STATION
REDEVELOPMENT
6175 ROCKDALE RD., CONC. 6
PT. LOT 27 RP 50R-5729 PART
1,2 & 3 (IRREG.)

KEY PLAN:

DISCLAIMER: COPYRIGHT:
THIS DRAWING AND DESIGN IS COPYRIGHT PROTECTED WHICH SHALL NOT BE USED, REPRODUCED OR REVISED WITHOUT WRITTEN PERMISSION BY WSP. THE CONTRACTOR SHALL CHECK AND VERIFY ALL DIMENSIONS AND UTILITY LOCATIONS AND REPORT ALL ERRORS AND OMISSIONS PRIOR TO COMMENCING WORK.
THIS DRAWING IS NOT TO BE SCALED.

ISSUED FOR - REVISION:

IS	RE	DATE	DESCRIPTION
9		JULY 15, 2020	ISSUED FOR REVIEW
8		JUNE 8, 2020	ISSUED FOR REVIEW
7		AUGUST 29/19	ISSUED FOR REVIEW
6	1	APRIL 8/19	ISSUED FOR REVIEW
5		MAY 28/18	ISSUED FOR REVIEW
4		APRIL 26/18	ISSUED FOR REVIEW
3		MAR 20/18	ISSUED FOR REVIEW
2		DEC 20/17	ISSUED FOR REVIEW
1		NOV 13/17	33% PRELIMINARY DESIGN

PROJECT NO: 171-14602-00
DATE: 12/20/17
ORIGINAL SCALE: AS SHOWN
IF THIS BAR IS NOT 25mm LONG, ADJUST YOUR PLOTTING SCALE. 25mm
DESIGNED BY: M.J.
DRAWN BY: B.L.
CHECKED BY: M.J.

DISCIPLINE: CIVIL

TITLE: DETAILS

SHEET NUMBER: C5.1
SHEET #: 5 OF 6

ISSUE: ISSUE FOR REVIEW
DATE OF: 2020-06-08
REV #: 1

C:\Users\michael.jans\Desktop\Design Documents\6.0 Local Files & Backups\Van Gas Stations\6.0 Dwg\01. Civil\01. Production\171-14602-00-C5-1-3.dwg, Jul 15, 2020-9:56am BY:(michael.jans)