Site Servicing and Stormwater Management Report 130 and 136 Central Park Drive, Ottawa, ON

Client:
Ashcroft Homes
18 Antares Drive
Ottawa, ON K2E 1A9
Canada

Submitted for:
Site Plan Control

Project Name:
Central Park Retirement. Astoria Buildings B & C

Project Number:
OTT-00258888-A0

Prepared By:
EXP
2650 Queensview Drive
Ottawa, ON K2B 8H8
t: +1.613.688.1899
f: +1.613.225.7337

Date Submitted:
March 27, 2020

Site Servicing and Stormwater Management Report
130 and 136 Central Park Drive, Ottawa, ON

Client:
Ashcroft Homes
18 Antares Drive
Ottawa, ON K2E 1A9

Submitted for:
Site Plan Control

Project Name:
Central Park Retirement. Astoria Buildings B & C

Project Number:
OTT-00258888-A0

Prepared By:
EXP
2650 Queensview Drive
Ottawa, ON K2B 8H8
t: +1.613.688.1899
f: +1.613.225.7337

Prepared by:

Jason Fitzpatrick, P.Eng.
Project Engineer

Approved by:

Bruce Thomas, P.Eng.
Senior Project Manager

Date Submitted:
March 27, 2020

Table of Contents

1 Introduction 1
1.1 Overview 1
2 Existing Conditions 2
3 Existing Infrastructure 2
3.1 Pre-Consultation / Permits / Approvals 3
4 Water Servicing 4
4.1 Existing Water Servicing 4
4.2 Water Servicing Proposal 4
4.3 Water Servicing Design 4
4.4 Water Servicing Design Criteria 5
4.5 Estimated Water Demands 6
4.6 Boundary Conditions 6
4.7 Fire Flow Requirements 6
4.8 Review of Hydrant Spacing 7
5 Sewage Servicing 8
5.1 Existing Sewage Conditions 8
5.2 Proposed Sewage Conditions 8
6 Storm Servicing & Stormwater Management 10
6.1 Design Criteria 10
6.2 Minor System Design Criteria 10
6.3 Major System Design Criteria 10
6.4 Runoff Coefficients 11
6.5 Time of Concentration 11
6.6 Pre-Development Conditions 11
6.7 Allowable Release Rate 11
6.8 Proposed Stormwater System 12
6.9 Flow Attenuation 12
7 Erosion & Sediment Control 14
8 Conclusions and Recommendations 15
9 Legal Notification 16

List of Figures

Figure 1-1 - Site Location 1
Figure A-1 – Property Location Plan ..... A
Figure A-2 - Hydrant Location Plan ..... A

List of Tables

Table 4-1 - Summary of Water Supply Design Criteria 5
Table 4-2 : Water Demand Summary 6
Table 4-3 - Summary of Design Parameters Used in Calculating Required Fire Flows (RFF) Using FUS 7
Table 4-4 – Required Fire Flows 8
Table 5-2 – Summary of Wastewater Design Criteria / Parameters 8
Table 5-3 – Summary of Anticipated Sewage Rates 9
Table 6-1 – Summary of Runoff Coefficients 11
Table 6-2 – Summary of Pre-Development Flows 11
Table 6-3 – Summary of Post-Development Flows 12
Table 6-4 – Summary of Post-Development Storage 13
Table B-1 – Water Demand Chart ..... B
Table B-2 – Fire Flow Requirements Based on Fire Underwriters Survey (FUS) – Tower B ..... B
Table B-3 – Fire Flow Requirements Based on Fire Underwriters Survey (FUS) – Tower C ..... B
Table B-4 – Available Fire Flows Based on Hydrant Spacing ..... B
Table B-5 – Estimated Water Pressure at Proposed Building ..... B
Table C-1 – Sanitary Sewer Design Sheet C
Table D-1 – Estimation of Pre-Development Peak Flows ..... D
Table D-2 – Estimation of Allowable Peak Flows (Based on Max C=0.50 with Tc=10mins) ..... D
Table D-3 – Average Runoff Coefficients for Post-Development ..... D
Table D-4 – Summary of Post-Development Peak Flows (Uncontrolled and Controlled) ..... D
Table D-5 Summary of Storage ..... D
Table D-6 – Storage Volumes for 2-year, 5-year and 100-Year Storms (Area S01) ..... D
Table D-7 – Storage Volumes for 2-year, 5-year and 100-Year Storms (Area S02) ..... D
Table D-8 – Storage Volumes for 2-year, 5-year and 100-Year Storms (Area 06) ..... D
Table D-9 – Storage Volumes for 2-year, 5-year and 100-Year Storms (Area S08,012,013) ..... D
Table D-10 – Storage Volumes for 2-year, 5-year and 100-Year Storms (Area 09) ..... D
Table D-811– Storage Volumes for 2-year, 5-year and 100-Year Storms (Area S10) ..... D
Table D-12 – Storage Volumes for 2-year, 5-year and 100-Year Storms (Area S04) ..... D

Table D-13 – Storage Volumes for 2-year, 5-year and 100-Year Storms (Area S07) ..... D
Table D-14 – Estimation of Roof Storage and Outflow - Tower B ..... D
Table D-15 – Estimation of Roof Storage and Outflow - Tower C ..... D
Table D-16 – Estimation of Roof Storage and Outflow - Podium Link ..... D

List of Appendices

Appendix A - Figures ..... A
Appendix B – Water Servicing Tables ..... B
Appendix C – Sanitary Servicing Tables C
Appendix D – Stormwater Servicing Tables ..... D
Appendix E – Consultation / Correspondence ..... E
Appendix F – Background Information ..... F
Appendix G – Checklist ..... G
Appendix H – Drawings ..... H

1 Introduction

1.1 Overview

EXP Services Inc. (EXP) was retained by Ashcroft Homes to prepare a Site Servicing and Stormwater Management report for the proposed redevelopment of 150 Central Park Drive in support of a Site Plan Control application.

The 0.980-hectare site is situated off of Central Park Drive, just south of Staten Way as illustrated in **Figure 1-1** below. The site is within the City of Ottawa within Ward 16 (River). The description of the subject property is noted below:

- Part of Block 69 on plan 4M-1047 being Parts 9 to 11 on plan 4R-20298, in the City of Ottawa. PIN 039981710.

The development is comprised of two high-rise buildings. Tower B is a 10-storey high-rise comprised of 200 units and Tower C is 8-storey high-rise and comprised of 160 units. Below the towers, one level of underground parking will be provided.

This report will discuss the adequacy of the adjacent municipal watermain, sanitary sewers and storm sewers to provide the required water supply, convey the sewage and stormwater flows that will result from the proposed development. This report provides a design brief for submission, along with the engineering drawings, for City approval.

Figure 1-1 - Site Location

2 Existing Conditions

The current site is an open grassed area. The property is zoned Residential Fifth Density Zone (R5K).

The topography of the subject site falls to the north and east along Central Park Drive towards the existing storm water management pond northeast of the site. The current civic address of the site is 150 Central Park Drive. After the development is completed the civic addresses will be 130 and 136 Central Park Drive for Towers B & C respectively.

3 Existing Infrastructure

From review of the sewer and watermain mapping and as-built drawings the following summarizes the onsite and adjacent offsite infrastructure:

Within property

- 300mm storm sewer (to be abandoned)

a) Tower B Connection (Service laterals previously installed)

- 200mm watermain
- 250mm sanitary sewer
- 250mm storm sewer

b) Tower C Connection (Service laterals previously installed)

- 200mm watermain
- 250mm sanitary sewer
- 300mm storm sewer

On Central Park Drive

- 300mm watermain
- 250mm sanitary sewer
- 1050mm storm sewer
- Gas/Hydro /Bell / Streetlighting / Hydro

As-built drawings for the existing service laterals up to the property were obtained and are included in **Appendix F**.

3.1 Pre-Consultation / Permits / Approvals

A pre-consultation meeting was held with the City prior to design commencement. This meeting outlined the submission requirements and provided information to assist with the development proposal.

In addition, various design guidelines were referred to in preparing the current report including:

- Bulletin ISDTB-2012-4 (20 June 2012)
  - Technical Bulletin ISDTB-2014-01 (05 February 2014)
  - Technical Bulletin PIEDTB-2016-01 (September 6, 2016)
  - Technical Bulletin ISDTB-2018-01 (21 March 2018)
  - Technical Bulletin ISDTB-2018-04 (27 June 2018)
- Ottawa Design Guidelines – Water Distribution, July 2010 (WDG001), including:
  - Technical Bulletin ISDTB-2014-02 (May 27, 2014)
  - Technical Bulletin ISTB-2018-02 (21 March 2018)
- Stormwater Management Planning and Design Manual, Ontario Ministry of the Environment and Climate Change, March 2003 (SMPDM).
- Design Guidelines for Drinking-Water Systems, Ontario Ministry of the Environment and Climate Change, 2008 (GDWS).
- Fire Underwriters Survey, Water Supply for Public Fire Protection (FUS), 1999.
- Ontario Building Code 2012, Ministry of Municipal Affairs and Housing.

4 Water Servicing

4.1 Existing Water Servicing

The site is within the City of Ottawa ME (Carlington Height PS) pressure zone. The property is currently serviced by two (2) existing watermain laterals (200mm and 250mm) that are capped at the property lines.

4.2 Water Servicing Proposal

The proposed development will consist of two high-rise buildings. Tower B is a 10-storey high-rise comprised of 200 units and Tower C is 8-storey high-rise and comprised of 160 units. The architectural site plan which includes the building statistics are provided in **Appendix H.**

Water supply for the site will be provided by two separate 200mm watermains supplied from the existing watermain on Central Park Drive and from within 120 Central Park Drive. Both towers will share the same mechanical room as the towers will be connected via a one storey link. Therefore, two watermain feeds are required. The need for a twin watermain feeds is the result of the water supply demands exceeding 50 m^3/day. The water feeds extending from the underground parking level will connect directly to the existing watermain stubs previously provided.

The buildings will be protected by automatic sprinkler system. A fire department connections (or siamese) will be located within 45 metres of adjacent municipally owned fire hydrants. In order to achieve this, a new hydrant will be installed off the existing 300mm watermain within Central Park Drive. Detailed layout of the proposed water services is provided in drawing C100 of **Appendix H.**

4.3 Water Servicing Design

The water servicing requirements for the proposed building is designed in accordance with the City Design Guidelines (July 2010). The following steps indicate the basic methodology that was used in our analysis:

- Estimated water demands under average day, maximum day and peak hour conditions. As the total population estimate was greater than 500, standard residential peaking factors were used, rather than based on MECP Table 3-3 which would be necessary when the design population is than 500 persons.
- Estimated the required fire flow (RFF) based on the Fire Underwriters Survey (FUS).
- Obtained hydraulic boundary conditions (HGL) from the City, based on the above water demands and required fire flows.
- Boundary condition data and water demands were used to estimate the pressure at the proposed building, and this was compared to the City's design criteria.

Since the average day demand exceed 50 m^3 per day, two watermain feeds to the building will be necessary as per Section 4.31 of the WDG001. Please refer to **Appendix B** for detailed calculations of the total water demands.

A review of the estimated watermain pressures at the building connection, based on the boundary conditions provided, was completed based on using two separate watermain connections. **Table B-5** in **Appendix B** provides a comparison of anticipated pressures at the building connection based on using single watermain feed to each stub. The single watermain analyses was completed to determined if the water pressure still met the City requirement during either the maximum day plus fire flow or peak hour condition, if one of the other laterals were out of service.

Based on results, the single watermain feed from Central Park Drive would result in a minimum pressure of ±81.3 psi within the building mechanical room under peak hour conditions. Under Max Day + Fire Flow, the use of the same single feed would result in a pressure of ±45.0 psi.

Similarly, a single feed from the exiting watermain within 120 Central Park Drive would result in pressures within the building mechanical room of 81.3 psi and 55.5 psi.

Therefore, should either one of the watermains become unavailable, there is appropriate pressure at the building in the event of a fire.

Based on the results, the existing two 250mm watermains with a shut-off valve between them is proposed. Detailed calculations of the anticipated water pressures, based on City of Ottawa boundary conditions, is provided in **Table B-5**.

Pressure reducing measures are required as operating pressures under average day conditions are greater than 80 psi.

4.4 Water Servicing Design Criteria

Table 4-1 below summarizes the Design Criteria that was used to establish the water demands and the required fire flows, based on the proposed building uses. The design parameters that apply to this project and used for calculations are identified below.

Table 4-1 - Summary of Water Supply Design Criteria

Design Parameter	Value	Applies
Population Density – Single-family Home	3.4 persons/unit	
Population Density – Semi-detached Home	2.7 persons/unit	
Population Density – Townhome or Terrace Flat	1.8 persons/unit	
Population Density – Bachelor Apartment	1.4 persons/unit	
Population Density – Bachelor + Den Apartment	1.4 persons/unit	
Population Density – One Bedroom Apartment	1.4 persons/unit	✓
Population Density – One Bedroom plus Den Apartment	1.4 persons/unit	✓
Population Density – Two Bedroom Apartment	2.1 persons/unit	✓
Population Density – Two Bedroom plus Den Apartment	2.1 persons/unit	✓
Average Day Demands – Residential	350 L/person/day	✓
Average Day Demands – Commercial / Institutional	28,000 L/gross ha/day	✓
Average Day Demands – Light Industrial / Heavy Industrial	35,000 or 55,000 L/gross ha/day	
Maximum Day Demands – Residential	2.5 x Average Day Demands	✓
Maximum Day Demands – Commercial / Institutional	1.5 x Average Day Demands	
Peak Hour Demands – Residential	5.5 x Average Day Demands	✓
Peak Hour Demands – Commercial / Institutional	2.7 x Average Day Demands	
Fire Flow Requirements Calculation	FUS	✓
Depth of Cover Required	2.4m	✓
Maximum Allowable Pressure	551.6 kPa (80 psi)	✓

Minimum Allowable Pressure	275.8 kPa (40 psi)	✓
Minimum Allowable Pressure during fire flow conditions	137.9 kPa (20 psi)	✓

4.5 Estimated Water Demands

The following **Table 4-2** below summarizes the anticipated water demands for the proposed development based on following:

- Tower B having 200 units and estimated population of 345 persons.
- Tower C having 160 units and estimated population of 276 persons.

Table 4-2 : Water Demand Summary

Water Demand Conditions	Tower B - Water Demands (L/sec)	Tower C - Water Demands (L/sec)	Total Water Demands (L/sec)
Average Day	1.46	1.12	2.57
Max Day	3.58	2.8	6.38
Peak Hour	7.84	6.15	14.00

4.6 Boundary Conditions

Hydraulic Grade Line (HGL) boundary conditions were obtained from the City for design purposes. A copy of the correspondence received from the City is provided in **Appendix F**.

The following hydraulic grade line (HGL) boundary conditions were provided:

- Minimum HGL = 155 m
- Max Day + Fire Flow = 150.0 m (Assuming 133 L/sec fire flow)
- Max Day + Fire Flow = 153.0 m (Assuming 167 L/sec fire flow)
- Maximum HGL = 161.0 m

Based on a ground elevation of approximately 99.4m and 99.8m at the boundary condition locations this results in the city water system supply a water pressures between 78.5 psi & 87.1 psi and 79.1 psi to 87.6 psi on Central Park Drive at the two boundary condition locations respectively.

4.7 Fire Flow Requirements

Water for fire protection will be available utilizing the proposed fire hydrants located along the adjacent roadways: Bond Street, Forest Street, Croydon Avenue, and Richmond Road. The required fire flows for the proposed buildings were calculated based on typical values as established by the Fire Underwriters Survey 1999 (FUS).

The following equation from the Fire Underwriters document “Water Supply for Public Fire Protection”, 1991, was used for calculation of the on-site supply rates required to be supplied by the hydrants:

$F = 200 * C * \sqrt{(A)}$

where:

F	=	Required Fire flow in Litres per minute
C	=	Coefficient related to type of Construction
A	=	Total Floor Area in square metres

The proceeding **Table 4-3** summarizes the parameters used for estimating the Required Fire Flows (RFF) based on the Fire Underwriters Survey (FUS) and the latest City of Ottawa Technical Bulletins. The RFFs were estimated in accordance with ISTB-2018-02, and based on floor areas provided by the architect, which are illustrates in **Appendix H.**

The following summarizes the parameters used for both proposed buildings.

- Type of Construction — Non-combustible
- Occupancy — Limited combustible
- Sprinkler Protection — Fully Supervised Automatic Sprinkler

Table 4-3 - Summary of Design Parameters Used in Calculating Required Fire Flows (RFF) Using FUS

Design Parameter	Value
Coefficient Related to type of Construction., C	0.80 (Towers A, Tower B)
Total Floor Area (m2)	13,060 (Tower B) 10,408 (Tower C)
Fire Flow prior to reduction (L/min)	15,580 (Tower B) 14,195 (Tower C)
Reduction Due to Occupancy Non-combustible (-25%), Limited Combustible (-15%), Combustible (0%), Free Burning (+15%), Rapid Burning (+25%)	-15% (Tower B) -15% (Tower C)
Reduction due to Sprinkler (Max 50%) Sprinkler Conforming to NFPA 13 (-30%), Standard Water Supply (-10%), Fully Supervised Sprinkler (-10%)	-50% (Tower B) -50% (Tower C)
Exposures	+20% (Tower B) +15% (Tower C)

The estimated required fire flows (RFF) based on the FUS methods is: 167 L/sec for Tower B, and 133 L/sec for Tower C.

4.8 Review of Hydrant Spacing

A review of the hydrant spacing was completed to ensure compliance with Appendix I of Technical Bulletin ISTB-2018-02. As per Section 3 of Appendix I all hydrants within 150 metres were reviewed to assess the total possible contribution of flow from these contributing hydrants. For each hydrant the distance to the proposed building was determined to arrive at the contribution of fire flow from each. All hydrants are expected to be of Class AA as per Section 5.1 of Appendix I. For each hydrant the straight-line distance, distance measured along a fire route or roadway, whether its location is accessible, and its contribution to the required fire flow.

Table 4-4 – Required Fire Flows

Building	Required Fire Flow (L/min)	Available Fireflow Based on Hydrant Spacing as per ISTB-2018-02 (L/min)
Tower B	10,000 (or 167 L/sec)	±13,300
Tower C	8,000 (or 133 L/sec)	±13,300

The total available contribution of flow from hydrants was estimated at 13,300 L/min for Towers B and C, whereas the required fire flows (RFF) for each building are 10,000 L/min and 8,000 L/min. In order to achieve the required fire flows, a new hydrant shall be installed within the site. Therefore, the available flows from hydrants exceed each building's fire flow requirements as identified in Appendix I of Technical Bulletin ISTB-2018-02. Additional information on the available flows from hydrants is provided in **Table B-4**.

5 Sewage Servicing

5.1 Existing Sewage Conditions

The subject property is a vacant, however there are two (2) existing 250mm sanitary stubs capped within the property that were installed in 2002 for future development purposes. One sanitary sewer stub on the north side of the side of the property (from 120 Central Park Drive) and one 250mm sanitary stub on the south side of the property (from Central Park Drive).

5.2 Proposed Sewage Conditions

The sanitary sewer system was designed based on a population flow with an area-based infiltration allowance. Each tower will connect into either existing sanitary sewers stubs as shown in Drawing C100, Site servicing Plan. **Table 5-1** below summarizes the design parameters used.

Table 5-1 – Summary of Wastewater Design Criteria / Parameters

Design Parameter	Value	Applies
Population Density – Single-family Home	3.4 persons/unit	
Population Density – Semi-detached Home	2.7 persons/unit	
Population Density – Duplex	2.3 persons/unit	
Population Density – Townhome (row)	2.7 persons/unit	
Population Density – Bachelor Apartment	1.4 persons/unit	
Population Density – Bachelor + Den Apartment	1.4 persons/unit	
Population Density – One Bedroom Apartment	1.4 persons/unit	✓
Population Density – One Bedroom plus Den Apartment	1.4 persons/unit	✓
Population Density – Two Bedroom Apartment	2.1 persons/unit	✓
Population Density – Two Bedroom plus Den Apartment	2.1 persons/unit	✓
Average Daily Residential Sewage Flow	280 L/person/day	
Average Daily Commercial / Intuitional Flow	28,000 L/gross ha/day	✓
Average Light / Heavy Industrial Daily Flow	35,000 / 55,000 L/gross ha/day	
Residential Peaking Factor – Harmon Formula (Min = 2.0, Max =4.0, with K=0.8)	$M = 1 + \frac{14}{4 + P^{0.5}} * k$	✓

Commercial Peaking Factor	1.5	✓
Institutional Peaking Factor	1.5	
Industrial Peaking Factor	As per Table 4-B (SDG002)	
Unit of Peak Extraneous Flow (Dry Weather / Wet Weather)	0.05 or 0.28 L/s/gross ha	
Unit of Peak Extraneous Flow (Total I/I)	0.33 L/s/gross ha	✓

The estimated peak sanitary flow rate for Tower B and Tower C is **4.70 L/sec and 3.74 L/sec** respectively based on City Design Guidelines, for a total peak sewage flow of **8.44L/sec**. Sewage rates below include a total infiltration allowance of 0.33 L/ha/sec based on the total gross site area.

Table 5-2 – Summary of Anticipated Sewage Rates

Sewage Condition	Tower B Sanitary Sewage Flow (L/sec)	Tower C Sanitary Sewage Flow (L/sec)	Total Sanitary Sewage Flow (L/sec)
Average Day	1.12	0.90	2.02
Commercial	0.05	0	0.05
Infiltration Flow	0.17	0.16	0.31
Peak Design Flow	4.70	3.74	8.44

6 Storm Servicing & Stormwater Management

The subject property is located within the Rideau Valley subwatershed; therefore, stormwater works are subject to both the Rideau Valley Conservation Authority (RVCA) and City of Ottawa (COO) approval.

The RVCA was contacted to determine quality control requirements for the site. Correspondence from the RVCA is provided in **Appendix F**, which clarifies that no onsite quality control is required. Similarly, no quality control was noted in the pre-consultation meeting held with the COO, which is also provided in **Appendix F.**

Also clarified during the pre-consultation meeting, the requirements related to stormwater quantity control are noted as follows:

- *The 5-yr storm event using the IDF information derived from the Meteorological Services of Canada rainfall data, taken from the MacDonald Cartier Airport, collected 1966 to 1997.*
- *The pre-development runoff coefficient or a maximum equivalent 'C' of 0.5, whichever is less (§ 8.3.7.3).*
- *A calculated time of concentration (Cannot be less than 10 minutes).*
- *Flows to the storm sewer in excess of the 5-year storm release rate, up to and including the 100-year storm event, must be detained on site.*

6.1 Design Criteria

The proposed stormwater system is designed in conformance with the latest version of the City of Ottawa Design Guidelines (October 2012). Section 5 "Storm and Combined Sewer Design" and Section 8 "Stormwater Management". A summary of the design criteria that relates to this design report is the proceeding sections below.

6.2 Minor System Design Criteria

- The storm sewer was sized based on the Rational Method and Manning's Equation under free flow conditions for the 2-year storm using a 10-minute inlet time.
- Since a detailed site plan was available for the site, including building footprints, calculations of the average runoff coefficients for each drainage area was completed.
- Minimum sewer slopes to be based on minimum velocities for storm sewers of 0.80 m/sec.

6.3 Major System Design Criteria

- The major system has been designed to accommodate on-site detention with sufficient capacity to attenuate the 100-year design storm. On-site storage is calculated based on the 100-year design storm with on-site detention storage provided on the roof and surface storage over the above ground parking area.
- On site storage is provided and calculated for up to the 100-year design storm. There is no surface ponding proposed on the ground surface.
- Overland flow routes are provided.
- The vertical distance from the spill elevation on the street and the ground elevation at the buildings is at least 150mm.
- The emergency overflow spill elevation is at least 30 cm below the lowest building opening.

6.4 Runoff Coefficients

Runoff coefficients used for were based on actual areas taken from CAD. Runoff coefficients for impervious surfaces (roofs, asphalt, and concrete) were taken as 0.90, whereas those for pervious surfaces (grass/landscaping) were taken as 0.20. Average runoff coefficients were calculated for catchments (or drainage areas) using the area-weighting routine in PCSWMM. The runoff coefficients for pre-development and post-development catchments are provided in **Appendix D**, with a summary provided in in **Table 6-1** below.

Table 6-1 – Summary of Runoff Coefficients

Location	Area (hectares)	Pre-Development Runoff Coefficient, C_{AVG}	Post-Development Runoff Coefficient, C_{AVG}
Entire Site	0.9678	0.20	0.69
External Areas	0.1326	0.90	0.90

6.5 Time of Concentration

A minimum time of concentration of 10-minutes was used for both pre-development and post-development subcatchments.

6.6 Pre-Development Conditions

Under current conditions stormwater runoff from the 0.9678-hectare site is considered as a single drainage area where Stormwater runoff discharges into Central Park Drive. As the entire site is an opened grassed area, it was assumed to have a runoff coefficient of 0.2.

Table 6-2 – Summary of Pre-Development Flows

Return Period Storm	Internal Peak Flows (L/sec)	External Peak Flows (L/sec)	Total Peak Flows (L/sec)
2-year	41.3	25.5	66.8
5-year	56.1	34.6	90.7
100-year	120.1	65.8	185.9

6.7 Allowable Release Rate

Rather than meeting the designed released rates for the site, the City of Ottawa imposes a more restrictive stormwater release rate as noted in Section 8.3.7.3 of the SDG002. The allowable discharge release rate from the site was established using the peak flows derived based on a 5-year return period storm, a maximum runoff coefficient of 0.50 and a standard time of concentration of 10 minutes.

A 0.07-hectare catchment (S12) will drain directly into the existing SWM pond downstream of the site. This catchment will not be considered in the allowable release rate or storm water management calculations.

Due to the proposed underground parking, there is conflict with the proposed location of the existing storm sewer. Therefore two (2) additional external catchments will be added to the stormwater management analysis. Drawing C400, Post Development Catchments Plan, illustrates the internal and external catchments being considered.

The allowable release rate of 149.4 L/sec from the proposed site will be based on a 5-year storm event. **Table D-2** provides detailed calculations on the total allowable peak flow, and the distribution to each outfall. In summary the allowable release rate of 149.4 L/sec is comprised of 130.2 L/sec from the proposed site and 19.2 L/sec from the external areas.

6.8 Proposed Stormwater System

Stormwater runoff from the proposed site will drain from a combination of controlled and uncontrolled areas. As a result of the changes onsite the overall post-development runoff coefficient will increase over pre-development conditions. This increase in runoff is the result of changes due to site development (i.e. additional hard surfaces, roof areas and hard landscaping).

The Post Development Catchments Plan (C400) is available in Appendix H. A total fourteen (14) subcatchments (or drainage areas) within the development site are shown on this drawing with average runoff coefficients calculated for each drainage area. As the entire site property contains an underground parking structure, there is physically not enough space to permit a typical storm sewer system collection system therefore the proposed stormwater works consists of the following elements:

- Flow-control roof drains for Towers B & C. Each building to have a separate storm lateral connection to municipal system.
- Surface areas to collected by area drains and the storage is collected on the surface. This in turn discharges to the existing catchbasin maintenance hole.
- A single catchment (S12) shall drain directly into the downstream SWM pond.
- Remaining drainage areas along frontage of Central Park Drive to flow uncontrolled to right-of-way.

Table 6-3 – Summary of Post-Development Flows

Return Period Storm	Controlled Flows to Existing Storm Sewers (L/sec)			Total Controlled Peak Flows (L/sec)	Uncontrolled Overland Flows (L/sec)		Total Un-Controlled Peak Flows (L/sec)	Total Peak Flows (L/sec)
	Via Ex. 300m Stub	Via Ex. 250mm Stub	Via New 300mm Storm		To 120 Central Park Dr	To Central Park Dr ROW		
2-year	13.8	13.1	15.3	42.2	6.6	5.8	12.4	54.6
5-year	18.7	17.8	20.8	57.2	8.9	7.9	16.8	74.1
100-year	38.3	34.0	41.0	113.3	19.1	17.0	36.1	149.4

To achieve the quantity control requirements and meet the allowable discharge rates as noted in **Section 6.7**, the roof drains on both Towers will require flow controlled weirs. Based on the roof areas, an estimate of the number of roof drains required was completed. WATTS ACCUTROL weirs were used to determine the total discharge rates from the roof areas based on the number of drains. In addition, the total cumulative prism volumes on the roofs were calculated at a maximum permitted depth of 150mm. Additional information on the estimated 100-year volumes is provided in **Section 6.9**.

6.9 Flow Attenuation

As a result of utilizing flow control, attenuation of runoff is necessary. This will be achieved utilizing roof storage and surface storage on the parking surface areas. Using the allowable release rates, the Modified Rational Method was used to determine the 2-year, 5-year, and 100-year volumes that will occur for corresponding release rates.

Table D-6, Table D-7 and **Table D-8** provides the volumes necessary on the roof to detain the release rates based on the Modified Rational Method. **Table D-4** summarizes the combined controlled and uncontrolled flows leaving the subject site. A summary of the controlled flows and associated retention volumes are summarized in **Table 6-4** below.

Table 6-4 – Summary of Post-Development Storage

Area	Release Rate (L/s)			Storage Required (m^3) (MRM)			Storage Provided (m^3)		Control Method	Outlet
	2-yr	5-yr	100-yr	2-yr	5-yr	100-yr	Roof	Surface		
S01	2.2	3.0	5.7	20.5	27.5	51.9	55.5		Flow Controlled Roof Drains	Building B - Roof
S02	0.6	0.8	1.6	19.0	25.6	48.3	76.3		Flow Controlled Roof Drains	Building Link - Roof
S03	8.1	10.9	21.1						None. Uncontrolled	Heated Interlock Entrance
S04	2.2	3.0	5.7	1.2	1.6	3.1	2.0		Flow Controlled Area Drains	Dining Terrace
S05	6.6	8.9	19.1						None. Uncontrolled	Offsite
S06	2.2	3.0	5.7	21.0	28.1	52.7	55.3		Flow Controlled Roof Drains	Building C - Roof
S07	3.2	4.3	8.3	1.7	2.4	4.5	6.0		Flow Controlled Area Drains	Lower Terrace
S09	6.3	8.5	18.3	14.5	19.6	41.6		21.7	Watts FD-460	Surface Storage Round About
S10	2.1	2.8	6.0	3.5	4.7	10.1		15.8	Watts FD-460	Surface Storage Parking
S11	5.8	7.9	17.0						None. Uncontrolled	Offsite-Row
S08	15.3	20.8	41.0	12.4	16.8	33.0		33.3	Tempest MHF Type C	SURFACE STORAGE PARKING
EXS13										
EXS14										
Totals	54.6	74.1	149.4	94.0	126.2	245.3	195.2	70.8		
S12	6.6	8.9	19.1						None. Uncontrolled	OFFSITE (Directly to Pond)

Although the total storage provided exceeds the requirements (266 m3 versus 245.3 m3), there is a small shortfall of 19.9 m^3 for Subcatchment S09 near the front entrance. This is due to the large area at the front entrance and the minimal area available for storage. Any excess runoff will spill onto Central Park Drive from this subcatchment. Subcatchment S12 was not included in the storm water management design as the catchment will drain directly to the downstream SWM pond.

7 Erosion & Sediment Control

During all construction activities, erosion and sedimentation shall be controlled by the following techniques:

- Filter cloth shall be installed between the frame and cover of all adjacent catch basins and catch basin manhole structures.
- Heavy duty silt fencing will be used to control runoff around the construction area. Silt fencing locations are identified on the site grading and erosion control plan.
- A mud mat will be installed at the construction entrance to help avoid mud from being transported to offsite roads.
- Visual inspection shall be completed daily on sediment control barriers and any damage repaired immediately. Care will be taken to prevent damage during construction operations.
- In some cases, barriers may be removed temporarily to accommodate the construction operations. The affected barriers will be reinstated at night when construction is completed.
- Sediment control devices will be cleaned of accumulated silt as required. The deposits will be disposed of as per the requirements of the contract.
- During the course of construction, if the engineer believes that additional prevention methods are required to control erosion and sedimentation, the contractor will install additional silt fences or other methods as required to the satisfaction of the engineer.
- Construction and maintenance requirements for erosion and sediment controls are to comply with Ontario Provincial Standard Specification (OPSS) OPSS 805 and City of Ottawa specifications.

8 Conclusions and Recommendations

This Servicing & Stormwater Report outlines the rationale which will be used to service the proposed development. The following summarizes the servicing requirements for the site:

Water

- Two 200mm watermains are proposed to service the residential Towers B and C, as the average day demands exceed 50 m^3 per day, which is mandatory as per Section 4.31 of the WDG001.
- The Required Fire Flows (RFFs) were estimated at **10,000 L/min** (167 L/sec) for Tower B, and **8,000 L/min** (133 L/sec) for Tower C. The total available flows for firefighting purposes, based on the contribution from hydrants, was estimated at **13,300 L/min**.
- Based on hydraulic boundary conditions (HGL) provided by the City of Ottawa, a system pressure of **±81 psi** under peak hourly demands is anticipated at the proposed building.

Sewage

- Estimated peak sewage flows are **4.70 L/sec and 3.74 L/sec** for Towers B & C respectively are anticipated for a total of **8.44 L/sec** entering the sanitary sewer on Central Park Drive. The existing sanitary feed to the building is a 250mm diameter sanitary sewer is with a minimum 1% slope, having a capacity of 60.4 L/sec based on Manning's Equation under full flow conditions.

Stormwater

- For the stormwater system, the allowable capture rate from the entire site was calculated based on a runoff coefficient of 0.50, time of concentration of 10 minutes for a 5-year storm event. The allowable release rate for the entire site was calculated to be **149.4 L/sec**. Runoff in excess of this will be detained onsite for up to the 100-year storm.
- Two minor surface drainage areas will flow uncontrolled to the right-of-way. The 100-year peak flows from these two areas were accounted for (ie. subtracted) from the total runoff rate to establish the allowable rate.
- In order to meet the allowable release rate, a total retention volume of **±245.3m^3** is required.
- Runoff on the building roofs will be controlled using flow-controlled roof drains. For each tower six (10) roof-drains equipped with WATTS ACCUTROL weirs and set at the CLOSED position whereas the link between towers shall have five (5) roof-drains and set at the CLOSED position. All drain for the towers shall have a maximum discharge rate of 5 gpm at 150mm depth.
- A total 100-year storage volume requirements on the roofs of Tower B, Tower C, and the link between was estimated as **152.9 m^3** (51.9m^3, 48.3m^3, and 52.7m^3 respectively), based on the above release rates, using the Modified Rational Method. The volumes available on the roofs are **195.2 m^3** (55.5m^3, 55.3m^3, and 76.3m^3 respectively), therefore exceeding the required volumes.
- Runoff from the surface areas will be controlled using surface storage. The surface areas will be controlled using area drains. The volume necessary to detain the 100-year event, is **84.7 m^3**. The available surface ponding will be able to hold a maximum volume of approximately **70.8m^3**. Due to lack of available surface storage, catchment number S09 will overflow **19.9m^3** onto Central Park Drive.

Erosion & Sediment Control

- Erosion and sediment control methods will be used during construction to limit erosion potential.

9 Legal Notification

This report was prepared by EXP Services Inc. for the account of Ashcroft Homes.

Any use which a third party makes of this report, or any reliance on or decisions to be made based on it, are the responsibility of such third parties. EXP Services Inc. accepts no responsibility for damages, if any, suffered by any third party as a result of decisions made or actions based on this project.

Appendix A - Figures

Figure A-1 – Property Location Plan

Figure A-2 - Hydrant Location Plan

FIGURE A1 - PROPERTY LOCATION PLAN

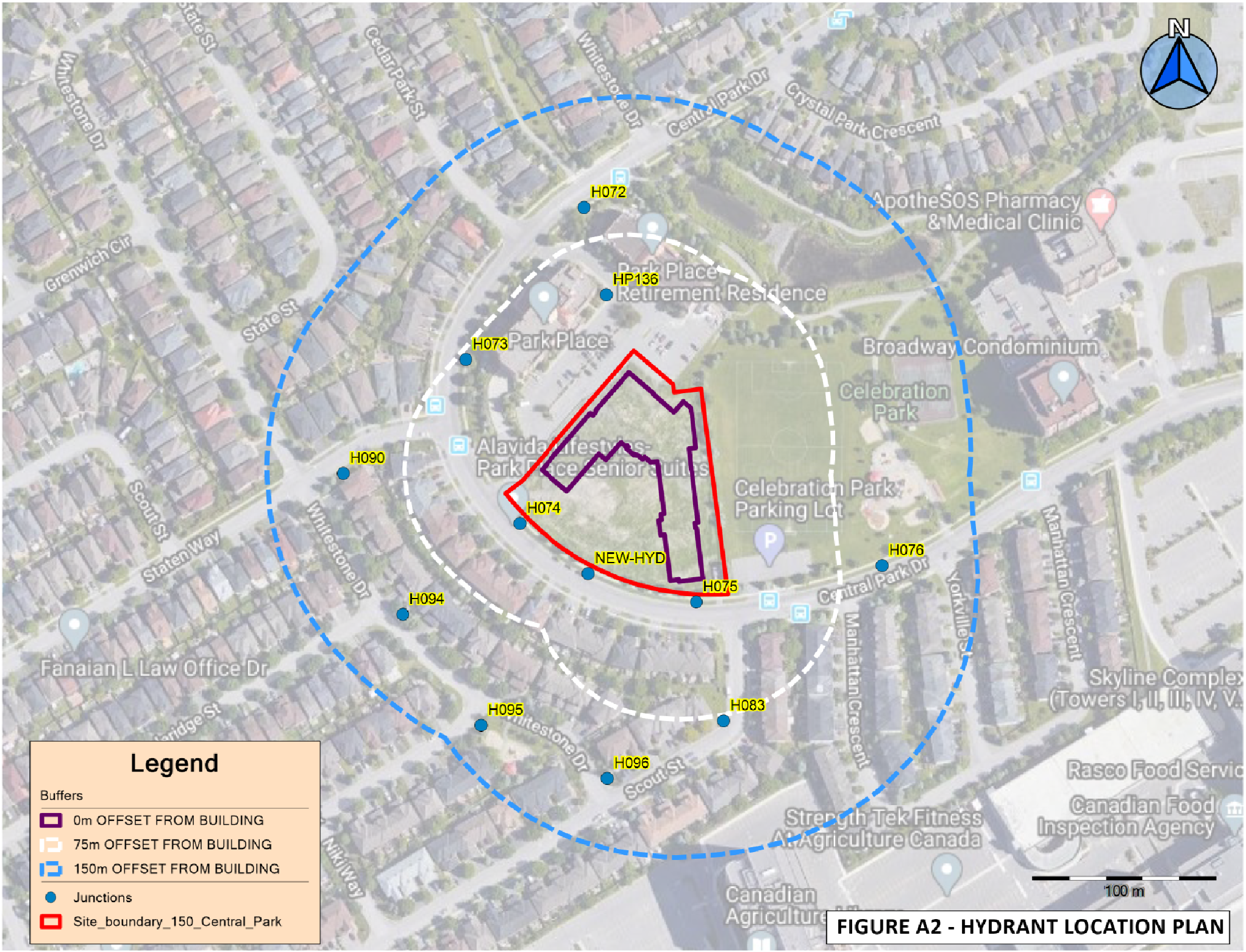

FIGURE A2 - HYDRANT LOCATION PLAN

Appendix B – Water Servicing Tables

Table B-1 – Water Demand Chart

Table B-2 – Fire Flow Requirements Based on Fire Underwriters Survey (FUS) – Tower B

Table B-3 – Fire Flow Requirements Based on Fire Underwriters Survey (FUS) – Tower C

Table B-4 – Available Fire Flows Based on Hydrant Spacing

Table B-5 – Estimated Water Pressure at Proposed Building

TABLE B-1
WATER DEMAND CHART

Location: 130 & 136 Central Park Drive
Project No: OTT-00258888-A0
Designed by: J. Fitpatrick
Checked By: B. Thomas
Date Revised: March 2020

Water Consumption
Residential = **350** L/cap/day
Comm/Ammen = 5.0 L/m²/day

Population Densities

Single Family	3.4	person/unit
Semi-Detahced	2.7	person/unit
Duplex	2.3	person/unit
Townhome (Row)	2.7	person/unit
Bachelor Apartment	1.4	person/unit
1 Bedroom Apartment	1.4	person/unit
1 Bedroom Plus Den Apartment	1.8	person/unit (average of 1-bed & 2-bed)
2 Bedroom Apartment	2.1	person/unit
2 Bedroom Plus Den Apartment	2.6	person/unit (average of 2-bed & 3-bed)
3 Bedroom Apartment	3.1	person/unit
4 Bedroom Apartment	4.1	person/unit
Avg. Apartment	1.8	person/unit

Proposed Buildings	No. of Residential Units: Singles/Semis/Towns: Single Family	Semi-Detached	Duplex	Townhome	Apartments: Studio	1 Bedroom	1 Bed + Den	2 Bedroom	2 Bed + Den	3 Bedroom	4 Bedroom	Avg Apt.	Total Persons (pop)	Residential Demands in (L/sec): Avg. Day Demand (L/day)	Peaking Factors (x Avg Day): Max Day	Peak Hour	Max Day Demand (L/day)	Peak Hour Demand (L/day)	Commercial / Ammen: Area (m^2)	Avg Demand (L/day)	Peaking Factors (x Avg Day): Max Day	Peak Hour	Max Day Demand (L/day)	Peak Hour Demand (L/day)	Total Demands (L/sec): Avg Day (L/s)	Max Day (L/s)	Max Hour (L/s)
Tower B																											
10th floor						5	13	1	1				34.5														
9th floor						5	13	1	1				34.5														
8th floor						5	13	1	1				34.5														
7th floor						5	13	1	1				34.5														
6th floor						5	13	1	1				34.5														
5th floor						5	13	1	1				34.5														
4th floor						5	13	1	1				34.5														
3th floor						5	13	1	1				34.5														
2nd floor						5	13	1	1				34.5														
Ground floor							13						22.8														
Basement							7						12.3														
Sub Total Tower B =						**45**	**137**	**9**	**9**				**345**	**120,768**	**2.50**	**5.50**	**301,919**	**664,221**	**1,000**	**5,000.0**	**1.50**	**2.70**	**7,500.00**	**13,500**	**1.46**	**3.58**	**7.84**
Tower C																											
8th floor						5	13	1	1				34.5														
7th floor						5	13	1	1				34.5														
6th floor						5	13	1	1				34.5														
5th floor						5	13	1	1				34.5														
5th floor						5	13	1	1				34.5														
3th floor						5	13	1	1				34.5														
2nd floor						5	13	1	1				34.5														
Ground floor							13						22.8														
Basement							7						12.3														
Sub Total Tower C =						**35**	**111**	**7**	**7**				**276**	**96,653**	**2.50**	**5.50**	**241,631**	**531,589**							**1.12**	**2.80**	**6.15**
Total (Tower B & C)						**80**	**248**	**16**	**16**				**621**	**217,420**			**543,550**	**1,195,810**	**1,000**						**2.57**	**6.38**	**14.00**

EXISTING TOWERS A & D (Park Place I & 2) - For Infrmation Only

Ex. Tower A								*103*					*216.3*	*75,705*	*2.50*	*5.50*	*189,263*	*416,378*							*0.88*	*2.19*	*4.82*
Ex. Tower D								*99*					*207.9*	*72,765*	*2.50*	*5.50*	*181,913*	*400,208*							*0.84*	*2.11*	*4.63*
								202					*424.2*	*148,470*			*371,175*	*816,585*							*1.72*	*4.30*	*9.45*

TABLE B-2
FIRE FLOW REQUIREMENTS BASED ON FIRE UNDERWRITERS SURVEY(FUS) 1999 FOR ASTORIA - TOWER B

An estimate of the Fire Flow required for a given fire area may be estimated by:

$$F = 220 * C * \sqrt{A}$$

where: F = required fire flow in litres per minute
A = total floor area in m^2 (including all storeys, but excluding basements at least 50% below grade)
C = coefficient related to the type of construction

Task	Options	Multiplier	Input				Value Used	Fire Flow Total (L/min)
Choose Building Frame (C)	Wood Frame	1.5	Non-combustible Construction				0.8	
	Ordinary Construction	1						
	Non-combustible Construction	0.8						
	Fire Resistive Construction	0.6						
Input Building Floor Areas (A)			Area	% Used	Area Used	Comment		
	Floor 10		1306	50%	653	Two largest adjoining floors+ 50% of floors above (up to eight)		
	Floor 9		1306	50%	653			
	Floor 8		1306	50%	653			
	Floor 7		1306	50%	653			
	Floor 6		1306	50%	653			
	Floor 5		1306	50%	653			
	Floor 4		1306	50%	653			
	Floor 3		1306	50%	653			
	Floor 2		1306	100%	1,306			
	Floor 1 (Ground)		1306	100%	1,306			
	Basement (At least 50% below grade, not included)							
Fire Flow (F)	F = 220 * C * SQRT(A)							15,580
Fire Flow (F)	Rounded to nearest 1,000							**16,000**

Reductions/Increases Due to Factors Effecting Burning

Task	Options	Multiplier	Input	Value Used	Fire Flow Change (L/min)	Fire Flow Total (L/min)
Choose Combustibility of Building Contents	Non-combustible	-25%	Limited Combustible	-15%	-2,400	13,600
	Limited Combustible	-15%				
	Combustible	0%				
	Free Burning	15%				
	Rapid Burning	25%				
Choose Reduction Due to Sprinkler System	**Adequate** Sprinkler Conforms to NFPA13	-30%	Adequate Sprinkler Conforms to NFPA13	-30%	-4,080	9,520
	No Sprinkler	0%				
	Standard Water Supply for Fire Department Hose Line and for Sprinkler System	-10%	Standard Water Supply for Fire Department Hose Line and for Sprinkler System	-10%	-1,360	8,160
	Not Standard Water Supply or Unavailable	0%				
	Fully Supervised Sprinkler System	-10%	Fully Supervised Sprinkler System	-10%	-1,360	6,800
	Not Fully Supervised or N/A	0%				

Choose Structure Exposure Distance	Exposures	Separ-ation Dist (m)	Cond	Separation Conditon	Exposed Wall type	Exposed Wall Length: Length (m)	No of Storeys	Lenth-height Factor	Sub-Conditon	Charge (%)	Total Charge (%)	Total Exposure Charge (L/min)	
	Side 1 (west)	40	5	30.1 to 45	Type B	49	6	294	5E	5%	20%	2,720	9,520
	Side 2 (east)	45	5	30.1 to 45	Type B	13	5	65	5C	5%			
	Front (north)	21	4	20.1 to 30	Type B	53	8	424	4E	10%			
	Back (south)	56	6	> 45.1	Type B	19	2	30	6	0%			
Obtain Required Fire Flow	Total Required Fire Flow, Rounded to the Nearest 1,000 L/min =												**10,000**
	Total Required Fire Flow, L/s =												**167**

Exposure Charges for Exposing Walls of Wood Frame Construciton (from Table G5)

Type A	Wood-Frame or non-conbustible
Type B	Ordinary or fire-resisitve with unprotected openings
Type C	Ordinary or fire-resisitve with semi-protected openings
Type D	Ordinary or fire-resisitve with blank wall

Conditons for Separation

Separation Dist	Condition
0m to 3m	1
3.1m to 10m	2
10.1m to 20m	3
20.1m to 30m	4
30.1m to 45m	5
> 45.1m	6

TABLE B-3
FIRE FLOW REQUIREMENTS BASED ON FIRE UNDERWRITERS SURVEY(FUS) 1999 FOR ASTORIA - TOWER C

An estimate of the Fire Flow required for a given fire area may be estimated by:

$$F = 220 * C * SQRT(A)$$

where: F = required fire flow in litres per minute
A = total floor area in m^2 (including all storeys, but excluding basements at least 50% below grade)
C = coefficient related to the type of construction

Task	Options	Multiplier	Input				Value Used	Fire Flow Total (L/min)
Choose Building Frame (C)	Wood Frame	1.5	Non-combustible Construction				0.8	
	Ordinary Construction	1						
	Non-combustible Construction	0.8						
	Fire Resistive Construction	0.6						
Input Building Floor Areas (A)			Area	% Used	Area Used	Comment		
						Two largest adjoining floors+ 50% of floors above (up to eight)		
	Floor 8		1301	50%	651			
	Floor 7		1301	50%	651			
	Floor 6		1301	50%	651			
	Floor 5		1301	50%	651			
	Floor 4		1301	50%	651			
	Floor 3		1301	50%	651			
	Floor 2		1301	100%	1,301			
	Floor 1 (Ground)		1301	100%	1,301			
	Basement (At least 50% below grade, not included)							
Fire Flow (F)	F = 220 * C * SQRT(A)							14,195
Fire Flow (F)	Rounded to nearest 1,000							**14,000**

Reductions/Increases Due to Factors Effecting Burning

Task	Options	Multiplier	Input	Value Used	Fire Flow Change (L/min)	Fire Flow Total (L/min)
Choose Combustibility of Building Contents	Non-combustible	-25%	Limited Combustible	-15%	-2,100	11,900
	Limited Combustible	-15%				
	Combustible	0%				
	Free Burning	15%				
	Rapid Burning	25%				
Choose Reduction Due to Sprinkler System	**Adequate** Sprinkler Conforms to NFPA13	-30%	Adequate Sprinkler Conforms to NFPA13	-30%	-3,570	8,330
	No Sprinkler	0%				
	Standard Water Supply for Fire Department Hose Line and for Sprinkler System	-10%	Standard Water Supply for Fire Department Hose Line and for Sprinkler System	-10%	-1,190	7,140
	Not Standard Water Supply or Unavailable	0%				
	Fully Supervised Sprinkler System	-10%	Fully Supervised Sprinkler System	-10%	-1,190	5,950
	Not Fully Supervised or N/A	0%				

Choose Structure Exposure Distance	Exposures	Separ-ation Dist (m)	Cond	Separation Conditon	Exposed Wall type	Exposed Wall Length: Length (m)	No of Storeys	Lenth-height Factor	Sub-Conditon	Charge (%)	Total Charge (%)	Total Exposure Charge (L/min)	
	Side 1 (west)	21	4	20.1 to 30	Type B	35	6	210	4E	10%	15%	1,785	7,735
	Side 2 (east)	100	6	> 45.1	Type B	0	5	0	6	0%			
	Front (south)	90	6	> 45.1	Type B	0	5	0	6	0%			
	Back (north)	35.0	5	30.1 to 45	Type B	19	2	30	5A	5%			
Obtain Required Fire Flow										Total Required Fire Flow, Rounded to the Nearest 1,000 L/min =			**8,000**
										Total Required Fire Flow, L/s =			**133**

Exposure Charges for Exposing Walls of Wood Frame Construciton (from Table G5)

Type A	Wood-Frame or non-conbustible
Type B	Ordinary or fire-resisitve with unprotected openings
Type C	Ordinary or fire-resisitve with semi-protected openings
Type D	Ordinary or fire-resisitve with blank wall

Conditons for Separation

Separation Dist	Condition
0m to 3m	1
3.1m to 10m	2
10.1m to 20m	3
20.1m to 30m	4
30.1m to 45m	5
> 45.1m	6

TABLE B-4
AVAILABLE FIRE FLOWS BASED ON HYDRANT SPACING

Hydrant #	Location	City / Private	Accessible (yes/no)	Building B		Building C		Comment
				[1]Distance (m)	[2]Fire Flow Contribution (L/min)	[1]Distance (m)	[2]Fire Flow Contribution (L/min)	
H072	CENTRAL PARK DRIVE	City	Yes	>150		>150		
H073	CENTRAL PARK DRIVE	City	Yes	>150		>150		
H074	CENTRAL PARK DRIVE	City	Yes	>150		>150		
H075	CENTRAL PARK DRIVE	City	Yes	95	3,800	95	3,800	
H076	CENTRAL PARK DRIVE	City	Yes	140	3,800	140	3,800	
H083	SCOTT STREET	City	Yes	>150		>150		
H090	STATEN WAY	City	Yes	>150		>150		
H094	WHITESTONE DRIVE	City	Yes	>150		>150		
H095	GRAMMECY PARK	City	Yes	>150		>150		
H096	WHITESTONE DRIVE	City	Yes	>150		>150		
HP136	RETIREMENT	Private	No	>150		>150		
NEW HYDRANT	CENTRAL PARK DRIVE	City	yes	50	5,700	50	5,700	NEW HYDRANT
Total (L/min)					13,300		13,300	
FUS RFF in L/min or (L/sec)					10,000 (167)		8,000 (133)	
Meets Requreiment (Yes/No)					Yes		Yes	

Notes:

[1]Distance is measured along a road or fire route.

[2]Fire Flow Contribution for Class AA Hydrant from Table 1 of Appendix I, ISTB-2018-02

Table B-5
ESTIMATED WATER PRESSURE AT PROPOSED BUILDING

Description	From	To	Demand (L/sec)	Pipe Length (m)	Pipe Dia (mm)	Dia (m)	Q (m3/sec)	Area (m2)	C	Vel (m/s)	Slope of HGL (m/m)	Head Loss (m)	Elev From (m)	Elev To (m)	*Elev Diff (m)	Pressure From kPa	(psi)	Pressure To kPa	(psi)	Pressure Drop (psi)
Single Feed from Connection 1																				
Peak Hour	305mm WM	Bldg Face	14.0	12.0	251	0.251	0.0140	0.049481	110	0.2829	0.00055	0.0066	99.80	97.65	2.1	541.5	(78.5)	562.5	(81.6)	-3.0
	Bldg Face	[1]Mech Room	14.0	115.0	200	0.200	0.0140	0.031416	110	0.4455	0.00165	0.1899	97.65	97.65	0.0	562.5	(81.6)	560.7	(81.3)	0.3
Max Day Plus Fireflow	305mm WM	Bldg Face	173.0	12.0	251	0.251	0.1730	0.049481	110	3.4972	0.05755	0.6906	99.80	97.65	2.1	492.5	(71.4)	506.8	(73.5)	-2.1
	Bldg Face	[1]Mech Room	173.0	115.0	200	0.200	0.1730	0.031416	110	5.5082	0.17395	20.004	97.65	97.65	0.0	506.8	(73.5)	310.5	(45.0)	28.5
Single Feed from Connection 2																				
Peak Hour	305mm WM	Bldg Face	23.4	150.0	251	0.251	0.0234	0.049481	110	0.4739	0.00142	0.2131	99.40	97.65	1.8	545.4	(79.1)	560.5	(81.3)	-2.2
	Bldg Face	[1]Mech Room	14.0	30.0	200	0.200	0.0140	0.031416	110	0.4455	0.00165	0.0495	97.65	97.65	0.0	560.5	(81.3)	560.0	(81.2)	0.1
Max Day Plus Fireflow	305mm WM	Bldg Face	173.0	150.0	251	0.251	0.1730	0.049481	110	3.4972	0.05755	8.6323	99.40	97.65	1.8	496.4	(72.0)	428.9	(62.2)	9.8
	Bldg Face	[1]Mech Room	173.0	30.0	200	0.200	0.1730	0.031416	110	5.5082	0.17395	5.2185	97.65	97.65	0.0	428.9	(62.2)	377.7	(54.8)	7.4

Water Demand Info	**Tower B**	**Tower C**	*Ex Tower A*	*Ex Tower D*
Average Demand (L/sec) =	1.46	1.12	*0.88*	*0.84*
Max Day Demand (L/sec) =	3.58	2.80	*2.19*	*2.11*
Peak Hr Deamand (L/sec) =	7.84	6.15	*4.82*	*4.63*
Fireflow Requriement (L/sec) =	167	133	*unknown*	*unknown*
Max Day Plus FF Demand (L/sec) =	173.0			

Parameters

Hazen Williams C Factor for Friction Loss in Pipe, C=	110
Approx Bldg FF Elev (m) =	101.0
Approx Bldg BFF Elev (m) =	97.65

Boundary Conditons (from City)	**Connection 1**	**Connection 2**
Min HGL (m)	155	155
Max HGL (m)	161	161
Max Day + FF (167 L/s) HGL (m)	150	150
Approx Ground Elev at Conn (m) =	99.80	99.40
Min Pressure (m) =	55.2	55.6
Max Pressure (m) =	61.2	61.6
Min Pressure (Pa) =	541,512	545,436
Max Pressure (Pa) =	600,372	604,296
Pressure (psi) =	78.5	79.1
Pressure (psi) =	87.1	87.6

HGL Used for Connection 1

Avg Day	**Max Day**	**Peak Hr**	**Max Day + FF**
161 m	158 m	155 m	150 m
600,372 Pa	570,942 Pa	541,512 Pa	492,462 Pa
87.1 psi	82.8 psi	78.5 psi	71.4 psi

HGL Used for Connection 2

Avg Day	**Max Day**	**Peak Hr**	**Max Day + FF**
161 m	158 m	155 m	150 m
604,296 Pa	574,866 Pa	545,436 Pa	496,386 Pa
87.6 psi	83.4 psi	79.1 psi	72.0 psi

Notes:

1) Used Max HGL elevation during AVERAGE Day Demands
2) Used Max HGL elevation during Max Day Demands
3) Used Min HGL elevation during Peak Hr Demands
4) Used Min HGL elevation during Max Day Plus Fireflow Demands

Appendix C – Sanitary Servicing Tables

Table C-1 – Sanitary Sewer Design Sheet

Table C-1

SANITARY SEWER CALCULATION SHEET

LOCATION				RESIDENTIAL AREAS AND POPULAITONS											COMMERCIAL				INFILTRATION				SEWER DATA						
					NUMBER OF UNITS							POPULATION				AREA (ha)				AREA (ha)										
Street	U/S MH	D/S MH	Description	Area (ha)	Single	Semi	1-Bed Apt.	1-Bed + Den Apt	2-Bed Apt.	2-Bed + Den Apt	3-Bed Apt.	INDIV	ACCU	Peak Factor	Peak Flow (L/sec)	INDIV	ACCU	Peak Factor	Peak Flow (L/sec)	INDIV	ACCU	INFILT FLOW (L/s)	TOTAL FLOW (L/s)	Nom Dia (mm)	Actual Dia (mm)	Slope (%)	Length (m)	Capacity (L/sec)	Q/Q_{CAP} (%)	Full Velocity (m/s)
Central Park Dr	Tower B	MH3	SA1	0.22			45	137	9	9		345.1	345.1	4.00	4.47					0.22	0.22	0.07	4.55							
			SA3	1.02									345.1	4.00	4.47					1.02	1.24	0.41	4.88	250	251.46	1.0	24.3	60.4	8%	1.21
	MH3	MH 2											345.1	4.00	4.47						1.24	0.41	4.88	300	251.46	1.0	44.5	60.4	8%	1.21
	MH 2		1003	0.32																	1.24									
		MH 1	1002	0.22								198.0	543.1	3.36	5.91					0.22	1.46	0.48	6.39	250	251.46	1.0	40.9	60.4	11%	1.21
	MH 1	SAN Main 1	1001	0.23								206.0	749.1	3.30	8.01					0.23	1.69	0.56	8.57	250	251.46	2.0	24.8	85.4	10%	1.72
Central Park Dr	Tower C	SAN Main 2	SA2	0.13			35	111	7	7		276.15	276.2	4.00	3.58					0.13	0.13									
			SA3	0.51									276.2	4.00	3.58					0.51	0.64	0.21	3.79	250	251.46	1.0	17.0	60.4	6%	1.21
				2.648			**80**	**248**	**16**	**16**		**1025.2**								**2.328**										

Residential Avg. Daily Flow, q (L/p/day) =	280	Commercial Peak Factor =	1.5	(when area >20%)		Unit Type	Ppu	Designed:	Project:
Residential Avg. Daily Flow, q (L/p/day) =	28,000		1.0	(when area <20%)	Peak Population Flow, (L/sec)	Singles =	3.4	J. Fitzpatrick, P.Eng.	130 and 136 Central Park Drive
or L/gross ha/sec =	0.324				= P*q*M/86.4	Semi-Detached =	2.7		
Institutianal Avg. Daily Flow (L/s/ha) =	28,000	Institutional Peak Factor =	1.5	(when area >20%)	Peak Extraneous Flow, (L/sec)	1-bed Apt =	1.4	Checked:	Location:
or L/gross ha/sec =	0.324		1.0	(when area <20%)	= I*Ac	1-bed + Den Apt =	1.8		
Light Industrial Flow (L/gross ha/day) =	35,000				Residential Peaking Factor, M	2-bed Apt. Unit =	2.1	B. Thomas, P.Eng.	Ottawa, Ontario
or L/gross ha/sec =	0.4051	Residential Correction Factor, K =	0.80		= 1 + (14/(4+P^0.5)) * K	2-bed + Den Apt =	2.6		
Light Industrial Flow (L/gross ha/day) =	55,000	Manning N =	0.013		Sewer Capacity, Qcap (L/sec)	3-bed Apt. Unit =	3.1	File Reference:	Page No:
or L/gross ha/sec =	0.637	Peak extraneous flow, I (L/s/ha) =	0.33	(Total I/I)	$= 1/N \ S1^{/2} \ R^{2/3} \ A_c$			Design Sheet, Mar 2020 - Bt.xlsx	**1 of 1**

Appendix D – Stormwater Servicing Tables

Table D-1 – Estimation of Pre-Development Peak Flows

Table D-2 – Estimation of Allowable Peak Flows (Based on Max C=0.50 with Tc=10mins)

Table D-3 – Average Runoff Coefficients for Post-Development

Table D-4 – Summary of Post-Development Peak Flows (Uncontrolled and Controlled)

Table D-5 Summary of Storage

Table D-6 – Storage Volumes for 2-year, 5-year and 100-Year Storms (Area S01)

Table D-7 – Storage Volumes for 2-year, 5-year and 100-Year Storms (Area S02)

Table D-86 – Storage Volumes for 2-year, 5-year and 100-Year Storms (Area 06)

Table D-97 – Storage Volumes for 2-year, 5-year and 100-Year Storms (Area S08,012,013)

Table D-108 – Storage Volumes for 2-year, 5-year and 100-Year Storms (Area 09)

Table D-8911– Storage Volumes for 2-year, 5-year and 100-Year Storms (Area S10)

Table D-1210 – Storage Volumes for 2-year, 5-year and 100-Year Storms (Area S04)

Table D-1311 – Storage Volumes for 2-year, 5-year and 100-Year Storms (Area S07)

Table D-14 – Estimation of Roof Storage and Outflow - Tower B

Table D-15 – Estimation of Roof Storage and Outflow - Tower C

Table D-16 – Estimation of Roof Storage and Outflow - Podium Link

Table D-1 ESTIMATION OF PRE-DEVELOPMENT PEAK FLOWS

Catchment No.	Area (ha)	Outlet Location	Time of Conc, Tc (min)	Storm = 2 yr			Storm = 5 yr			Storm = 100 yr		
				I_2 (mm/hr)	Cavg	Q_{2PRE} (L/sec)	I_5 (mm/hr)	Cavg	Q_{5PRE} (L/sec)	I_{100} (mm/hr)	Cavg	Q_{100PRE} (L/sec)
Entire Site	0.9678	Central Park Dr.	10.0	76.81	0.20	41.3	104.29	0.20	56.1	178.56	0.25	120.1
External Areas	0.1326	Central Park Dr.	10.0	76.81	0.90	25.5	104.29	0.90	34.6	178.56	1.00	65.8
Totals	1.1005					66.8			90.7			185.9

Notes

1) Intensity, I = 732.951/(Tc+6.199)$^{0.810}$ (2-year, City of 0ttawa)
2) Intensity, I = 998.071/(Tc+6.035)$^{0.814}$ (5-year, City of 0ttawa)
3) Intensity, I = 1735.688/(Tc+6.014)$^{0.820}$ (100-year, City of Ottawa)
4) Cavg for 100-year is increased by 25% to a maximum of 1.0

Table D-2 ESTIMATION OF ALLOWABLE PEAK FLOWS (Based on Max C=0.50 with Tc=10mins & 2-yr Storm)

Area (onsite)	Area (ha)	Time of Conc, Tc (min)	Storm = 2 yr			Storm = 5 yr			Storm = 100 yr		
			I_5 (mm/hr)	Cavg	Q_{5ALLOW} (L/sec)	I_5 (mm/hr)	Cavg	Q_{5ALLOW} (L/sec)	I_5 (mm/hr)	Cavg	Q_{5ALLOW} (L/sec)
Site Into Minor System	0.8980	10	76.81	0.50	95.9	104.29	0.50	130.2	178.56	0.65	289.7
External Areas	0.1326	10	76.81	0.50	14.2	104.29	0.50	19.2	178.56	0.65	42.8
Totals	**1.0306**				**110.0**			**149.4**			**332.5**
Catchment Directly to Pond	0.0699	10	76.81	0.50	7.5	104.29	0.50	10.1	178.56	0.65	22.5

Notes

1) Allowable Capture Rate is based on 2-year storm at Tc=10 minutes.

Allowable Discharge (based on 5-yr storm)

Table D-3 AVERAGE RUNOFF COEFFICIENTS FOR POST-DEVELOPMENT

Runoff Coeffients $C_{ASPH/CONC}$ = 0.90 C_{ROOF} = 0.90 C_{GRASS} = 0.20

Area No.	Outlet Location	Asphalt & Conc Areas (m^2)	A * C_{ASPH}	Roof Areas (m^2)	A * C_{ROOF}	Grassed Areas (m^2)	A * C_{GRASS}	Sum AC	Total Area (m^2)	C_{AVG} (see note)	Comment
S01	STUB								1307	0.90	BUILDING B - ROOF
S02	STUB								1039	0.90	BUILDING LINK - ROOF
S03	STUB								424	0.89	HEATED INTERLOCK ENTRANCE
S04	STUB								220	0.90	DINING TERRACE
S05	CB								489	0.63	OFFSITE
S06	CBMH14								1307	0.90	BUILDING C - ROOF
S07	CBMH14								318	0.90	LOWER TERRACE
S08	CBMH14								602	0.79	SURFACE STORAGE PARKING
S09	CBMH14								1716	0.74	SURFACE STORAGE ROUND ABOUT
S10	CBMH14								506	0.68	SURFACE STROAGE PARKING
S11	J09								1052	0.26	OFFSITE-ROW
SUB Totals									**8,980**		
EXS13	CBMH14								735.4	0.90	OFFSITE
EXS14	CBMH14								590.9	0.90	OFFSITE
Totals									**10,306**		
S12	CB12								699	0.44	OFFSITE (Directly to Pond)

Notes

1) Cavg derived with area-weighting command in PCSWMM

Table D-4 SUMMARY OF POST-DEVELOPMENT PEAK FLOWS (Uncontrolled and Controlled)

			Storm = 2 yr				Storm = 5 yr				Storm = 100 yr					
Area No	Area (ha)	Time of Conc, Tc (min)	C_{AVG}	I_2 (mm/hr)	Q (L/sec)	Q_{CAP} (L/sec)	C_{AVG}	I_5 (mm/hr)	Q (L/sec)	Q_{CAP} (L/sec)	C_{AVG}	I_{100} (mm/hr)	Q (L/sec)	Q_{CAP} (L/sec)	Outlet Location	Comments
S01	0.1307	10	0.90	76.81	25.1	**(2.2)**	0.90	104.19	34.1	**(3.0)**	1.00	178.56	64.9	**(5.7)**	STUB	BUILDING B - ROOF
S02	0.1039	10	0.90	76.81	20.0	**(0.6)**	0.90	104.19	27.1	**(0.8)**	1.00	178.56	51.6	**(1.6)**	STUB	BUILDING LINK - ROOF
S03	0.0424	10	0.89	76.81	8.1	**(8.1)**	0.89	104.19	10.9	**(10.9)**	1.00	178.56	21.1	**(21.1)**	STUB	HEATED INTERLOCK ENTRANCE
S04	0.0220	10	0.90	76.81	4.2	2.2	0.90	104.19	5.7	3.0	1.00	178.56	10.9	**5.7**	STUB	DINING TERRACE
S05	0.0489	10	0.63	76.81	6.6	6.6	0.63	104.19	8.9	8.9	0.79	178.56	19.1	**19.1**	CB	OFFSITE
S06	0.1307	10	0.90	76.81	25.1	**(2.2)**	0.90	104.19	34.1	**(3.0)**	1.00	178.56	64.9	**(5.7)**	CBMH14	BUILDING C - ROOF
S07	0.0318	10	0.90	76.81	6.1	3.2	0.90	104.19	8.3	4.3	1.00	178.56	15.8	**8.3**	CBMH14	LOWER TERRACE
S09	0.1716	10	0.74	76.81	27.1	**(6.3)**	0.74	104.19	36.8	**(8.5)**	0.93	178.56	78.8	**(18.3)**	CBMH14	SURFACE STORAGE ROUND ABOUT
S10	0.0506	10	0.68	76.81	7.4	**(2.1)**	0.68	104.19	10.0	**(2.8)**	0.85	178.56	21.4	**(6.0)**	CBMH14	SURFACE STROAGE PARKING
S11	0.1052	10	0.26	76.81	5.8	5.8	0.26	104.19	7.9	7.9	0.33	178.56	17.0	**17.0**	J09	OFFSITE-ROW
S08	0.0602	10	0.79	76.81	10.2		0.79	104.19	13.8		0.99	178.56	29.5			SURFACE STORAGE PARKING
EXS13	0.0735	10	0.90	76.81	14.1	**(15.3)**	0.90	104.19	19.2	**(20.8)**	1.00	178.56	36.5	**(41.0)**		OFFSITE
EXS14	0.0591	10	0.90	76.81	11.4		0.90	104.19	15.4		1.00	178.56	29.3			OFFSITE
Totals	**1.0306**				**171.1**	**54.6**			**232.1**	**74.1**			**460.6**	**149.4**		
S12	0.0699	10	0.44	76.81	6.6	6.6	0.44	104.19	8.9	8.9	0.55	178.56	19.1	**19.1**	CB12	OFFSITE (Directly to Pond)

Notes 149.4 <--- allowable

2-yr Storm Intensity, I = 732.951/(Tc+6.199)^0.810 (City of Ottawa) **0.0** **<--- difference**

5-yr Storm Intensity, I = 998.071/(Tc+6.035)^0.814 (City of Ottawa)

100-yr Storm Intensity, I = 1735.688/(Tc+6.014)&^0.820 (City of Ottawa)

Time of Concentration (min), Tc = ***10***

For Flows under column Qcap which are shown in brackets ***(0.0)*** *, denotes flows that are controlled*

Table D-5 SUMMARY OF STORAGE

Area No	Release Rate (L/s)			Storage Required (m^3) (MRM)			Storage Provided (m^3)		Control Method	Area Desc
	2-yr	5-yr	100-yr	2-yr	5-yr	100-yr	Roof	Surface		
S01	2.2	3.0	5.7	20.5	27.5	51.9	55.5		Flow Controlled Roof Drains	BUILDING B - ROOF
S02	0.6	0.8	1.6	19.0	25.6	48.3	76.3		Flow Controlled Roof Drains	BUILDING LINK - ROOF
S03	8.1	10.9	21.1						None. Uncontrolled	HEATED INTERLOCK ENTRANCE
S04	2.2	3.0	5.7	1.2	1.6	3.1	2.0		Flow Controlled Area Drains	DINING TERRACE
S05	6.6	8.9	19.1						None. Uncontrolled	OFFSITE
S06	2.2	3.0	5.7	21.0	28.1	52.7	55.3		Flow Controlled Roof Drains	BUILDING C - ROOF
S07	3.2	4.3	8.3	1.7	2.4	4.5	6.0		Flow Controlled Area Drains	LOWER TERRACE
S09	6.3	8.5	18.3	14.5	19.6	41.6		21.7	Watts FD-460	SURFACE STORAGE ROUND ABOUT
S10	2.1	2.8	6.0	3.5	4.7	10.1		15.8	Watts FD-460	SURFACE STROAGE PARKING
S11	5.8	7.9	17.0						None. Uncontrolled	OFFSITE-ROW
S08 EXS13 EXS14	15.3	20.8	41.0	12.4	16.8	33.0		33.3	Tempest MHF Type C	SURFACE STORAGE PARKING
Totals	**54.6**	**74.1**	**149.4**	**94.0**	**126.2**	**245.3**	**195.2**	**70.8**		
S12	6.6	8.9	19.1						None. Uncontrolled	OFFSITE (Directly to Pond)

TABLE D-6

Storage Volumes for 2-year, 5-Year and 100-Year Storms

Area No: **S01** **BUILDING B - ROOF**

C_{AVG} = 0.90 (2-yr)

C_{AVG} = 0.90 (5-yr)

C_{AVG} = 1.00 (100-yr, Max 1.0)

Time Interval = 2.00 (mins)

Drainage Area = 0.1307 (hectares)

Duration (min)	Release Rate = 2.2 (L/sec); Return Period = 2 (years); IDF Parameters, A = 732.951, B = 0.810, C = 6.199 (I = A/(T_c+C))					Release Rate = 3.0 (L/sec); Return Period = 5 (years); IDF Parameters, A = 998.071, B = 0.814, C = 6.053 (I = A/(T_c+C))					Release Rate = 5.7 (L/sec); Return Period = 100 (years); IDF Parameters, A = 1735.688, B = 0.820, C = 6.014 (I = A/(T_c+C))				
	Rainfall Intensity, I (mm/hr)	Peak Flow (L/sec)	Release Rate (L/sec)	Storage Rate (L/sec)	Storage (m^3)	Rainfall Intensity, I (mm/hr)	Peak Flow (L/sec)	Release Rate (L/sec)	Storage Rate (L/sec)	Storage (m^3)	Rainfall Intensity, I (mm/hr)	Peak Flow (L/sec)	Release Rate (L/sec)	Storage Rate (L/sec)	Storage (m^3)
0	167.2	54.7	2.20	52.5	0.00	230.5	75.4	2.982	72.4	0.00	398.6	144.8	5.678	139.1	0.00
2	133.3	43.6	2.20	41.4	4.97	182.7	59.7	2.982	56.7	6.81	315.0	114.4	5.678	108.7	13.05
4	111.7	36.5	2.20	34.3	8.24	152.5	49.9	2.982	46.9	11.25	262.4	95.3	5.678	89.6	21.51
6	96.6	31.6	2.20	29.4	10.58	131.6	43.0	2.982	40.0	14.41	226.0	82.1	5.678	76.4	27.51
8	85.5	27.9	2.20	25.7	12.36	116.1	38.0	2.982	35.0	16.79	199.2	72.4	5.678	66.7	32.01
10	76.8	25.1	2.20	22.9	13.75	104.2	34.1	2.982	31.1	18.65	178.6	64.9	5.678	59.2	35.51
12	69.9	22.9	2.20	20.7	14.87	94.7	31.0	2.982	28.0	20.14	162.1	58.9	5.678	53.2	38.32
14	64.2	21.0	2.20	18.8	15.79	86.9	28.4	2.982	25.4	21.37	148.7	54.0	5.678	48.3	40.61
16	59.5	19.5	2.20	17.3	16.57	80.5	26.3	2.982	23.3	22.39	137.5	50.0	5.678	44.3	42.52
18	55.5	18.1	2.20	15.9	17.22	75.0	24.5	2.982	21.5	23.25	128.1	46.5	5.678	40.8	44.12
20	52.0	17.0	2.20	14.8	17.77	70.3	23.0	2.982	20.0	23.98	120.0	43.6	5.678	37.9	45.47
22	49.0	16.0	2.20	13.8	18.25	66.1	21.6	2.982	18.6	24.61	112.9	41.0	5.678	35.3	46.63
24	46.4	15.2	2.20	13.0	18.67	62.5	20.4	2.982	17.5	25.15	106.7	38.8	5.678	33.1	47.62
26	44.0	14.4	2.20	12.2	19.03	59.3	19.4	2.982	16.4	25.61	101.2	36.8	5.678	31.1	48.48
28	41.9	13.7	2.20	11.5	19.34	56.5	18.5	2.982	15.5	26.02	96.3	35.0	5.678	29.3	49.21
30	40.0	13.1	2.20	10.9	19.61	53.9	17.6	2.982	14.6	26.37	91.9	33.4	5.678	27.7	49.85
32	38.3	12.5	2.20	10.3	19.84	51.6	16.9	2.982	13.9	26.67	87.9	31.9	5.678	26.2	50.39
34	36.8	12.0	2.20	9.8	20.05	49.5	16.2	2.982	13.2	26.93	84.3	30.6	5.678	24.9	50.86
36	35.4	11.6	2.20	9.4	20.23	47.6	15.6	2.982	12.6	27.16	81.0	29.4	5.678	23.7	51.26
38	34.1	11.1	2.20	8.9	20.38	45.8	15.0	2.982	12.0	27.35	77.9	28.3	5.678	22.6	51.60
40	32.9	10.7	2.20	8.5	20.51	44.2	14.4	2.982	11.5	27.51	75.1	27.3	5.678	21.6	51.89
Max =					**20.51**					**27.51**					**51.89**

Notes

1) Peak flow is equal to the product of 2.78 x C x I x A

2) Rainfall Intensity, $I = A/(Tc+C)^B$

3) Release Rate = Min (Release Rate, Peak Flow)

4) Storage Rate = Peak Flow - Release Rate

5) Storage = Duration x Storage Rate

6) Maximium Storage = Max Storage Over Duration

7) Parameters a,b,c are for City of Ottawa

TABLE D-7

Storage Volumes for 2-year, 5-Year and 100-Year Storms

Area No: S02 **BUILDING LINK - ROOF**

C_{AVG} = 0.90 (2-yr)

C_{AVG} = 0.90 (5-yr)

C_{AVG} = 1.00 (100-yr, Max 1.0)

Time Interval = 2.00 (mins)

Drainage Area = 0.1039 (hectares)

Duration (min)	Release Rate = 0.6 (L/sec); Return Period = 2 (years); IDF Parameters, A = 732.951, B = 0.810, C = 6.199 (I = A/(T_c+C))					Release Rate = 0.8 (L/sec); Return Period = 5 (years); IDF Parameters, A = 998.071, B = 0.814, C = 6.053 (I = A/(T_c+C))					Release Rate = 1.6 (L/sec); Return Period = 100 (years); IDF Parameters, A = 1735.688, B = 0.820, C = 6.014 (I = A/(T_c+C))				
	Rainfall Intensity, I (mm/hr)	Peak Flow (L/sec)	Release Rate (L/sec)	Storage Rate (L/sec)	Storage (m^3)	Rainfall Intensity, I (mm/hr)	Peak Flow (L/sec)	Release Rate (L/sec)	Storage Rate (L/sec)	Storage (m^3)	Rainfall Intensity, I (mm/hr)	Peak Flow (L/sec)	Release Rate (L/sec)	Storage Rate (L/sec)	Storage (m^3)
0	167.2	43.5	0.61	42.9	0.00	230.5	59.9	0.828	59.1	0.00	398.6	115.2	1.577	113.6	0.00
2	133.3	34.7	0.61	34.1	4.09	182.7	47.5	0.828	46.7	5.60	315.0	91.0	1.577	89.4	10.73
4	111.7	29.1	0.61	28.4	6.83	152.5	39.7	0.828	38.8	9.32	262.4	75.8	1.577	74.2	17.82
6	96.6	25.1	0.61	24.5	8.83	131.6	34.2	0.828	33.4	12.02	226.0	65.3	1.577	63.7	22.94
8	85.5	22.2	0.61	21.6	10.37	116.1	30.2	0.828	29.4	14.10	199.2	57.6	1.577	56.0	26.87
10	76.8	20.0	0.61	19.4	11.62	104.2	27.1	0.828	26.3	15.76	178.6	51.6	1.577	50.0	30.01
12	69.9	18.2	0.61	17.6	12.65	94.7	24.6	0.828	23.8	17.13	162.1	46.8	1.577	45.3	32.60
14	64.2	16.7	0.61	16.1	13.52	86.9	22.6	0.828	21.8	18.29	148.7	43.0	1.577	41.4	34.77
16	59.5	15.5	0.61	14.9	14.27	80.5	20.9	0.828	20.1	19.29	137.5	39.7	1.577	38.2	36.64
18	55.5	14.4	0.61	13.8	14.93	75.0	19.5	0.828	18.7	20.16	128.1	37.0	1.577	35.4	38.27
20	52.0	13.5	0.61	12.9	15.50	70.3	18.3	0.828	17.4	20.93	120.0	34.7	1.577	33.1	39.70
22	49.0	12.7	0.61	12.1	16.02	66.1	17.2	0.828	16.4	21.61	112.9	32.6	1.577	31.0	40.97
24	46.4	12.1	0.61	11.4	16.49	62.5	16.3	0.828	15.4	22.23	106.7	30.8	1.577	29.2	42.12
26	44.0	11.4	0.61	10.8	16.91	59.3	15.4	0.828	14.6	22.78	101.2	29.2	1.577	27.7	43.15
28	41.9	10.9	0.61	10.3	17.29	56.5	14.7	0.828	13.9	23.29	96.3	27.8	1.577	26.2	44.09
30	40.0	10.4	0.61	9.8	17.65	53.9	14.0	0.828	13.2	23.75	91.9	26.5	1.577	25.0	44.94
32	38.3	10.0	0.61	9.4	17.97	51.6	13.4	0.828	12.6	24.18	87.9	25.4	1.577	23.8	45.73
34	36.8	9.6	0.61	9.0	18.27	49.5	12.9	0.828	12.0	24.57	84.3	24.3	1.577	22.8	46.46
36	35.4	9.2	0.61	8.6	18.55	47.6	12.4	0.828	11.5	24.94	81.0	23.4	1.577	21.8	47.13
38	34.1	8.9	0.61	8.2	18.81	45.8	11.9	0.828	11.1	25.27	77.9	22.5	1.577	20.9	47.75
40	32.9	8.5	0.61	7.9	19.05	44.2	11.5	0.828	10.7	25.59	75.1	21.7	1.577	20.1	48.33
Max =					**19.05**					**25.59**					**48.33**

Notes

1) Peak flow is equal to the product of 2.78 x C x I x A

2) Rainfall Intensity, $I = A/(Tc+C)^B$

3) Release Rate = Min (Release Rate, Peak Flow)

4) Storage Rate = Peak Flow - Release Rate

5) Storage = Duration x Storage Rate

6) Maximium Storage = Max Storage Over Duration

7) Parameters a,b,c are for City of Ottawa

TABLE D-8

Storage Volumes for 2-year, 5-Year and 100-Year Storms

Area No: **S06** **BUILDING C - ROOF**

C_{AVG} = 0.90 (2-yr)

C_{AVG} = 0.90 (5-yr)

C_{AVG} = 1.00 (100-yr, Max 1.0)

Time Interval = 5.00 (mins)

Drainage Area = 0.1307 (hectares)

Duration (min)	Release Rate = 2.2 (L/sec); Return Period = 2 (years); IDF Parameters, A = 732.951, B = 0.810, C = 6.199 (I = A/(T_c+C))					Release Rate = 3.0 (L/sec); Return Period = 5 (years); IDF Parameters, A = 998.071, B = 0.814, C = 6.053 (I = A/(T_c+C))					Release Rate = 5.7 (L/sec); Return Period = 100 (years); IDF Parameters, A = 1735.688, B = 0.820, C = 6.014 (I = A/(T_c+C))				
	Rainfall Intensity, I (mm/hr)	Peak Flow (L/sec)	Release Rate (L/sec)	Storage Rate (L/sec)	Storage (m^3)	Rainfall Intensity, I (mm/hr)	Peak Flow (L/sec)	Release Rate (L/sec)	Storage Rate (L/sec)	Storage (m^3)	Rainfall Intensity, I (mm/hr)	Peak Flow (L/sec)	Release Rate (L/sec)	Storage Rate (L/sec)	Storage (m^3)
0	167.2	54.7	2.20	52.5	0.00	230.5	75.4	2.982	72.4	0.00	398.6	144.8	5.678	139.1	0.00
5	103.6	33.9	2.20	31.7	9.50	141.2	46.2	2.982	43.2	12.95	242.7	88.2	5.678	82.5	24.75
10	76.8	25.1	2.20	22.9	13.75	104.2	34.1	2.982	31.1	18.65	178.6	64.9	5.678	59.2	35.51
15	61.8	20.2	2.20	18.0	16.20	83.6	27.3	2.982	24.3	21.90	142.9	51.9	5.678	46.2	41.61
20	52.0	17.0	2.20	14.8	17.78	70.3	23.0	2.982	20.0	23.98	120.0	43.6	5.678	37.9	45.47
25	45.2	14.8	2.20	12.6	18.85	60.9	19.9	2.982	16.9	25.39	103.8	37.7	5.678	32.0	48.07
30	40.0	13.1	2.20	10.9	19.61	53.9	17.6	2.982	14.6	26.37	91.9	33.4	5.678	27.7	49.85
35	36.1	11.8	2.20	9.6	20.14	48.5	15.9	2.982	12.9	27.05	82.6	30.0	5.678	24.3	51.07
40	32.9	10.7	2.20	8.5	20.51	44.2	14.4	2.982	11.5	27.51	75.1	27.3	5.678	21.6	51.89
45	30.2	9.9	2.20	7.7	20.76	40.6	13.3	2.982	10.3	27.81	69.1	25.1	5.678	19.4	52.39
50	28.0	9.2	2.20	7.0	20.91	37.7	12.3	2.982	9.3	27.98	64.0	23.2	5.678	17.6	52.66
55	26.2	8.6	2.20	6.4	20.98	35.1	11.5	2.982	8.5	28.05	59.6	21.7	5.678	16.0	52.74
60	24.6	8.0	2.20	5.8	20.99	32.9	10.8	2.982	7.8	28.04	55.9	20.3	5.678	14.6	52.65
65	23.2	7.6	2.20	5.4	20.95	31.0	10.1	2.982	7.2	27.95	52.6	19.1	5.678	13.4	52.44
70	21.9	7.2	2.20	5.0	20.86	29.4	9.6	2.982	6.6	27.81	49.8	18.1	5.678	12.4	52.12
75	20.8	6.8	2.20	4.6	20.73	27.9	9.1	2.982	6.1	27.61	47.3	17.2	5.678	11.5	51.70
80	19.8	6.5	2.20	4.3	20.57	26.6	8.7	2.982	5.7	27.37	45.0	16.3	5.678	10.7	51.19
85	18.9	6.2	2.20	4.0	20.38	25.4	8.3	2.982	5.3	27.09	43.0	15.6	5.678	9.9	50.62
90	18.1	5.9	2.20	3.7	20.16	24.3	7.9	2.982	5.0	26.78	41.1	14.9	5.678	9.3	49.98
95	17.4	5.7	2.20	3.5	19.92	23.3	7.6	2.982	4.6	26.43	39.4	14.3	5.678	8.6	49.29
100	16.7	5.5	2.20	3.3	19.66	22.4	7.3	2.982	4.3	26.06	37.9	13.8	5.678	8.1	48.54
Max =					**20.99**					**28.05**					**52.74**

Notes

1) Peak flow is equal to the product of 2.78 x C x I x A

2) Rainfall Intensity, $I = A/(Tc+C)^B$

3) Release Rate = Min (Release Rate, Peak Flow)

4) Storage Rate = Peak Flow - Release Rate

5) Storage = Duration x Storage Rate

6) Maximium Storage = Max Storage Over Duration

7) Parameters a,b,c are for City of Ottawa

TABLE D-9

Storage Volumes for 2-year, 5-Year and 100-Year Storms

Area No: **S08,012,013 SURFACE STORAGE PARKING**

C_{AVG} = 0.87 (2-yr)

C_{AVG} = 0.87 (5-yr)

C_{AVG} = 1.00 (100-yr, Max 1.0)

Time Interval = 2.00 (mins)

Drainage Area = 0.1928 (hectares)

Actual Release Rate (L/sec) = 24.3

Percentage of Actual Rate (City of Ottawa requirement) = 50%

Release Rate Used for Estimation of 100-year Storage (L/sec) = 12.2

Duration (min)	Release Rate = 15.3 (L/sec); Return Period = 2 (years); IDF Parameters, A = 732.951, B = 0.810, C = 6.199; (I = A/(T_c+C)					Release Rate = 20.8 (L/sec); Return Period = 5 (years); IDF Parameters, A = 998.071, 0.814, C = 6.053; (I = A/(T_c+C)					Release Rate = 41.0 (L/sec); Return Period = 100 (years); IDF Parameters, A = 1735.688, 0.820, C = 6.014; (I = A/(T_c+C)				
	Rainfall Intensity, I (mm/hr)	Peak Flow (L/sec)	Release Rate (L/sec)	Storage Rate (L/sec)	Storage (m^3)	Rainfall Intensity, I (mm/hr)	Peak Flow (L/sec)	Release Rate (L/sec)	Storage Rate (L/sec)	Storage (m^3)	Rainfall Intensity, I (mm/hr)	Peak Flow (L/sec)	Release Rate (L/sec)	Storage Rate (L/sec)	Storage (m^3)
0	167.2	78.0	15.33	62.7	0.00	230.5	107.5	20.792	86.7	0.00	398.6	213.7	41.000	172.7	0.00
2	133.3	62.2	15.33	46.8	5.62	182.7	85.2	20.792	64.4	7.73	315.0	168.8	41.000	127.8	15.34
4	111.7	52.1	15.33	36.8	8.83	152.5	71.1	20.792	50.3	12.08	262.4	140.6	41.000	99.6	23.92
6	96.6	45.1	15.33	29.7	10.71	131.6	61.4	20.792	40.6	14.60	226.0	121.1	41.000	80.1	28.85
8	85.5	39.8	15.33	24.5	11.77	116.1	54.1	20.792	33.4	16.01	199.2	106.8	41.000	65.8	31.57
10	76.8	35.8	15.33	20.5	12.29	104.2	48.6	20.792	27.8	16.68	178.6	95.7	41.000	54.7	32.82
12	69.9	32.6	15.33	17.3	12.43	94.7	44.2	20.792	23.4	16.82	162.1	86.9	41.000	45.9	33.05
14	64.2	30.0	15.33	14.6	12.29	86.9	40.5	20.792	19.7	16.59	148.7	79.7	41.000	38.7	32.52
16	59.5	27.7	15.33	12.4	11.92	80.5	37.5	20.792	16.7	16.06	137.5	73.7	41.000	32.7	31.42
18	55.5	25.9	15.33	10.5	11.39	75.0	35.0	20.792	14.2	15.30	128.1	68.7	41.000	27.7	29.86
20	52.0	24.3	15.33	8.9	10.72	70.3	32.8	20.792	12.0	14.36	120.0	64.3	41.000	23.3	27.95
22	49.0	22.9	15.33	7.5	9.94	66.1	30.8	20.792	10.1	13.27	112.9	60.5	41.000	19.5	25.75
24	46.4	21.6	15.33	6.3	9.07	62.5	29.2	20.792	8.4	12.06	106.7	57.2	41.000	16.2	23.30
26	44.0	20.5	15.33	5.2	8.12	59.3	27.7	20.792	6.9	10.74	101.2	54.2	41.000	13.2	20.64
28	41.9	19.6	15.33	4.2	7.10	56.5	26.3	20.792	5.6	9.33	96.3	51.6	41.000	10.6	17.81
30	40.0	18.7	15.33	3.3	6.02	53.9	25.1	20.792	4.4	7.84	91.9	49.2	41.000	8.2	14.83
32	38.3	17.9	15.33	2.6	4.90	51.6	24.1	20.792	3.3	6.29	87.9	47.1	41.000	6.1	11.72
34	36.8	17.2	15.33	1.8	3.73	49.5	23.1	20.792	2.3	4.67	84.3	45.2	41.000	4.2	8.50
36	35.4	16.5	15.33	1.2	2.52	47.6	22.2	20.792	1.4	3.01	81.0	43.4	41.000	2.4	5.18
38	34.1	15.9	15.33	0.6	1.27	45.8	21.4	20.792	0.6	1.30	77.9	41.8	41.000	0.8	1.76
40	32.9	15.3	15.33	0.0	0.00	44.2	20.6	20.792	-0.2	-0.45	75.1	40.3	41.000	-0.7	-1.73
Max =					**12.43**					**16.82**					**33.05**

Notes

1) Peak flow is equal to the product of 2.78 x C x I x A

2) Rainfall Intensity, $I = A/(Tc+C)^B$

3) Release Rate = Min (Release Rate, Peak Flow)

4) Storage Rate = Peak Flow - Release Rate

5) Storage = Duration x Storage Rate

6) Maximium Storage = Max Storage Over Duration

7) Parameters a,b,c are for City of Ottawa

TABLE D-10

Storage Volumes for 2-year, 5-Year and 100-Year Storms

Area No: **S09** **SURFACE STORAGE PARKING**

C_{AVG} = 0.74 (2-yr)

C_{AVG} = 0.74 (5-yr)

C_{AVG} = 0.93 (100-yr, Max 1.0)

Time Interval = 2.00 (mins)

Drainage Area = 0.1716 (hectares)

Actual Release Rate (L/sec) = 24.3

Percentage of Actual Rate (City of Ottawa requirement) = 50%

Release Rate Used for Estimation of 100-year Storage (L/sec) = 12.2

Duration (min)	Release Rate = 6.3 (L/sec); Return Period = 2 (years); IDF Parameters, A = 732.951, B = 0.810, C = 6.199; (I = A/(T_c+C)^B					Release Rate = 8.5 (L/sec); Return Period = 5 (years); IDF Parameters, A = 998.071, B = 0.814, C = 6.053; (I = A/(T_c+C)^B					Release Rate = 18.3 (L/sec); Return Period = 100 (years); IDF Parameters, A = 1735.688, B = 0.820, C = 6.014; (I = A/(T_c+C)^B				
	Rainfall Intensity, I (mm/hr)	Peak Flow (L/sec)	Release Rate (L/sec)	Storage Rate (L/sec)	Storage (m^3)	Rainfall Intensity, I (mm/hr)	Peak Flow (L/sec)	Release Rate (L/sec)	Storage Rate (L/sec)	Storage (m^3)	Rainfall Intensity, I (mm/hr)	Peak Flow (L/sec)	Release Rate (L/sec)	Storage Rate (L/sec)	Storage (m^3)
0	167.2	59.0	6.30	52.7	0.00	230.5	81.4	8.543	72.8	0.00	398.6	175.9	18.300	157.6	0.00
2	133.3	47.1	6.30	40.8	4.89	182.7	64.5	8.543	56.0	6.71	315.0	139.0	18.300	120.7	14.49
4	111.7	39.4	6.30	33.1	7.96	152.5	53.8	8.543	45.3	10.87	262.4	115.8	18.300	97.5	23.40
6	96.6	34.1	6.30	27.8	10.02	131.6	46.5	8.543	37.9	13.65	226.0	99.7	18.300	81.4	29.32
8	85.5	30.2	6.30	23.9	11.46	116.1	41.0	8.543	32.5	15.58	199.2	87.9	18.300	69.6	33.41
10	76.8	27.1	6.30	20.8	12.49	104.2	36.8	8.543	28.2	16.95	178.6	78.8	18.300	60.5	36.30
12	69.9	24.7	6.30	18.4	13.23	94.7	33.4	8.543	24.9	17.92	162.1	71.6	18.300	53.3	38.34
14	64.2	22.7	6.30	16.4	13.76	86.9	30.7	8.543	22.2	18.61	148.7	65.6	18.300	47.3	39.76
16	59.5	21.0	6.30	14.7	14.12	80.5	28.4	8.543	19.9	19.07	137.5	60.7	18.300	42.4	40.71
18	55.5	19.6	6.30	13.3	14.36	75.0	26.5	8.543	17.9	19.36	128.1	56.5	18.300	38.2	41.29
20	52.0	18.4	6.30	12.1	14.49	70.3	24.8	8.543	16.3	19.51	120.0	52.9	18.300	34.6	41.57
22	49.0	17.3	6.30	11.0	14.53	66.1	23.4	8.543	14.8	19.55	112.9	49.8	18.300	31.5	41.60
24	46.4	16.4	6.30	10.1	14.51	62.5	22.1	8.543	13.5	19.49	106.7	47.1	18.300	28.8	41.44
26	44.0	15.5	6.30	9.2	14.43	59.3	21.0	8.543	12.4	19.36	101.2	44.7	18.300	26.4	41.11
28	41.9	14.8	6.30	8.5	14.29	56.5	19.9	8.543	11.4	19.16	96.3	42.5	18.300	24.2	40.64
30	40.0	14.1	6.30	7.8	14.11	53.9	19.0	8.543	10.5	18.89	91.9	40.5	18.300	22.2	40.04
32	38.3	13.5	6.30	7.2	13.90	51.6	18.2	8.543	9.7	18.58	87.9	38.8	18.300	20.5	39.33
34	36.8	13.0	6.30	6.7	13.65	49.5	17.5	8.543	8.9	18.23	84.3	37.2	18.300	18.9	38.53
36	35.4	12.5	6.30	6.2	13.37	47.6	16.8	8.543	8.3	17.83	81.0	35.7	18.300	17.4	37.65
38	34.1	12.0	6.30	5.7	13.06	45.8	16.2	8.543	7.6	17.40	77.9	34.4	18.300	16.1	36.70
40	32.9	11.6	6.30	5.3	12.73	44.2	15.6	8.543	7.1	16.94	75.1	33.2	18.300	14.9	35.67
Max =					**14.53**					**19.55**					**41.60**

Notes

1) Peak flow is equal to the product of 2.78 x C x I x A

2) Rainfall Intensity, $I = A/(Tc+C)^B$

3) Release Rate = Min (Release Rate, Peak Flow)

4) Storage Rate = Peak Flow - Release Rate

5) Storage = Duration x Storage Rate

6) Maximium Storage = Max Storage Over Duration

7) Parameters a,b,c are for City of Ottawa

TABLE D-11

Storage Volumes for 2-year, 5-Year and 100-Year Storms

Area No: **S10** **SURFACE STORAGE PARKING**

C_{AVG} = 0.68 (2-yr)

C_{AVG} = 0.68 (5-yr)

C_{AVG} = 0.85 (100-yr, Max 1.0)

Time Interval = 2.00 (mins)

Drainage Area = 0.0506 (hectares)

Actual Release Rate (L/sec) = 24.3

Percentage of Actual Rate (City of Ottawa requirement) = 50%

Release Rate Used for Estimation of 100-year Storage (L/sec) = 12.2

Duration (min)	Release Rate = 2.1 (L/sec); Return Period = 2 (years); IDF Parameters, A = 732.951, B = 0.810, C = 6.199; (I = A/(T_c+C)					Release Rate = 2.8 (L/sec); Return Period = 5 (years); IDF Parameters, A = 998.071, B = 0.814, C = 6.053; (I = A/(T_c+C)					Release Rate = 6.0 (L/sec); Return Period = 100 (years); IDF Parameters, A = 1735.688, B = 0.820, C = 6.014; (I = A/(T_c+C)				
	Rainfall Intensity, I (mm/hr)	Peak Flow (L/sec)	Release Rate (L/sec)	Storage Rate (L/sec)	Storage (m^3)	Rainfall Intensity, I (mm/hr)	Peak Flow (L/sec)	Release Rate (L/sec)	Storage Rate (L/sec)	Storage (m^3)	Rainfall Intensity, I (mm/hr)	Peak Flow (L/sec)	Release Rate (L/sec)	Storage Rate (L/sec)	Storage (m^3)
0	167.2	16.0	2.06	13.9	0.00	230.5	22.1	2.801	19.3	0.00	398.6	47.7	6.000	41.7	0.00
2	133.3	12.8	2.06	10.7	1.28	182.7	17.5	2.801	14.7	1.76	315.0	37.7	6.000	31.7	3.80
4	111.7	10.7	2.06	8.6	2.07	152.5	14.6	2.801	11.8	2.83	262.4	31.4	6.000	25.4	6.10
6	96.6	9.2	2.06	7.2	2.59	131.6	12.6	2.801	9.8	3.53	226.0	27.0	6.000	21.0	7.57
8	85.5	8.2	2.06	6.1	2.94	116.1	11.1	2.801	8.3	3.99	199.2	23.8	6.000	17.8	8.56
10	76.8	7.4	2.06	5.3	3.17	104.2	10.0	2.801	7.2	4.30	178.6	21.4	6.000	15.4	9.22
12	69.9	6.7	2.06	4.6	3.33	94.7	9.1	2.801	6.3	4.51	162.1	19.4	6.000	13.4	9.65
14	64.2	6.1	2.06	4.1	3.43	86.9	8.3	2.801	5.5	4.64	148.7	17.8	6.000	11.8	9.91
16	59.5	5.7	2.06	3.6	3.49	80.5	7.7	2.801	4.9	4.70	137.5	16.5	6.000	10.5	10.04
18	55.5	5.3	2.06	3.2	3.51	75.0	7.2	2.801	4.4	4.73	128.1	15.3	6.000	9.3	10.07
20	52.0	5.0	2.06	2.9	3.50	70.3	6.7	2.801	3.9	4.71	120.0	14.4	6.000	8.4	10.02
22	49.0	4.7	2.06	2.6	3.47	66.1	6.3	2.801	3.5	4.66	112.9	13.5	6.000	7.5	9.91
24	46.4	4.4	2.06	2.4	3.42	62.5	6.0	2.801	3.2	4.59	106.7	12.8	6.000	6.8	9.74
26	44.0	4.2	2.06	2.1	3.35	59.3	5.7	2.801	2.9	4.49	101.2	12.1	6.000	6.1	9.52
28	41.9	4.0	2.06	1.9	3.27	56.5	5.4	2.801	2.6	4.38	96.3	11.5	6.000	5.5	9.27
30	40.0	3.8	2.06	1.8	3.18	53.9	5.2	2.801	2.4	4.25	91.9	11.0	6.000	5.0	8.99
32	38.3	3.7	2.06	1.6	3.08	51.6	4.9	2.801	2.1	4.11	87.9	10.5	6.000	4.5	8.67
34	36.8	3.5	2.06	1.5	2.97	49.5	4.7	2.801	1.9	3.95	84.3	10.1	6.000	4.1	8.33
36	35.4	3.4	2.06	1.3	2.85	47.6	4.6	2.801	1.8	3.79	81.0	9.7	6.000	3.7	7.96
38	34.1	3.3	2.06	1.2	2.73	45.8	4.4	2.801	1.6	3.61	77.9	9.3	6.000	3.3	7.58
40	32.9	3.1	2.06	1.1	2.59	44.2	4.2	2.801	1.4	3.43	75.1	9.0	6.000	3.0	7.18
Max =					**3.51**					**4.73**					**10.07**

Notes

1) Peak flow is equal to the product of 2.78 x C x I x A

2) Rainfall Intensity, $I = A/(Tc+C)^B$

3) Release Rate = Min (Release Rate, Peak Flow)

4) Storage Rate = Peak Flow - Release Rate

5) Storage = Duration x Storage Rate

6) Maximium Storage = Max Storage Over Duration

7) Parameters a,b,c are for City of Ottawa

TABLE D-12

Storage Volumes for 2-year, 5-Year and 100-Year Storms

Area No: **S04** **DINING TERRACE**

C_{AVG} = 0.90 (2-yr)

C_{AVG} = 0.90 (5-yr)

C_{AVG} = 1.00 (100-yr, Max 1.0)

Time Interval = 5.00 (mins)

Drainage Area = 0.0220 (hectares)

Duration (min)	Release Rate = 2.2 (L/sec); Return Period = 2 (years); IDF Parameters, A = 732.951, B = 0.810, C = 6.199 (I = A/(T_c+C))					Release Rate = 3.0 (L/sec); Return Period = 5 (years); IDF Parameters, A = 998.071, B = 0.814, C = 6.053 (I = A/(T_c+C))					Release Rate = 5.7 (L/sec); Return Period = 100 (years); IDF Parameters, A = 1735.688, B = 0.820, C = 6.014 (I = A/(T_c+C))				
	Rainfall Intensity, I (mm/hr)	Peak Flow (L/sec)	Release Rate (L/sec)	Storage Rate (L/sec)	Storage (m^3)	Rainfall Intensity, I (mm/hr)	Peak Flow (L/sec)	Release Rate (L/sec)	Storage Rate (L/sec)	Storage (m^3)	Rainfall Intensity, I (mm/hr)	Peak Flow (L/sec)	Release Rate (L/sec)	Storage Rate (L/sec)	Storage (m^3)
0	167.2	9.2	2.22	7.0	0.00	230.5	12.7	3.008	9.7	0.00	398.6	24.3	5.728	18.6	0.00
5	103.6	5.7	2.22	3.5	1.04	141.2	7.8	3.008	4.8	1.43	242.7	14.8	5.728	9.1	2.73
10	76.8	4.2	2.22	2.0	1.20	104.2	5.7	3.008	2.7	1.63	178.6	10.9	5.728	5.2	3.11
15	61.8	3.4	2.22	1.2	1.06	83.6	4.6	3.008	1.6	1.43	142.9	8.7	5.728	3.0	2.70
20	52.0	2.9	2.22	0.6	0.77	70.3	3.9	3.008	0.9	1.02	120.0	7.3	5.728	1.6	1.92
25	45.2	2.5	2.22	0.3	0.40	60.9	3.3	3.008	0.3	0.51	103.8	6.3	5.728	0.6	0.92
30	40.0	2.2	2.22	0.0	-0.03	53.9	3.0	3.008	0.0	-0.08	91.9	5.6	5.728	-0.1	-0.21
35	36.1	2.0	2.22	-0.2	-0.49	48.5	2.7	3.008	-0.3	-0.72	82.6	5.0	5.728	-0.7	-1.44
40	32.9	1.8	2.22	-0.4	-0.99	44.2	2.4	3.008	-0.6	-1.39	75.1	4.6	5.728	-1.1	-2.73
45	30.2	1.7	2.22	-0.6	-1.50	40.6	2.2	3.008	-0.8	-2.09	69.1	4.2	5.728	-1.5	-4.08
50	28.0	1.5	2.22	-0.7	-2.03	37.7	2.1	3.008	-0.9	-2.81	64.0	3.9	5.728	-1.8	-5.46
55	26.2	1.4	2.22	-0.8	-2.57	35.1	1.9	3.008	-1.1	-3.56	59.6	3.6	5.728	-2.1	-6.88
60	24.6	1.4	2.22	-0.9	-3.12	32.9	1.8	3.008	-1.2	-4.31	55.9	3.4	5.728	-2.3	-8.33
65	23.2	1.3	2.22	-0.9	-3.68	31.0	1.7	3.008	-1.3	-5.08	52.6	3.2	5.728	-2.5	-9.80
70	21.9	1.2	2.22	-1.0	-4.25	29.4	1.6	3.008	-1.4	-5.85	49.8	3.0	5.728	-2.7	-11.28
75	20.8	1.1	2.22	-1.1	-4.83	27.9	1.5	3.008	-1.5	-6.64	47.3	2.9	5.728	-2.8	-12.79
80	19.8	1.1	2.22	-1.1	-5.41	26.6	1.5	3.008	-1.5	-7.43	45.0	2.7	5.728	-3.0	-14.30
85	18.9	1.0	2.22	-1.2	-6.00	25.4	1.4	3.008	-1.6	-8.23	43.0	2.6	5.728	-3.1	-15.83
90	18.1	1.0	2.22	-1.2	-6.59	24.3	1.3	3.008	-1.7	-9.03	41.1	2.5	5.728	-3.2	-17.37
95	17.4	1.0	2.22	-1.3	-7.18	23.3	1.3	3.008	-1.7	-9.84	39.4	2.4	5.728	-3.3	-18.92
100	16.7	0.9	2.22	-1.3	-7.78	22.4	1.2	3.008	-1.8	-10.66	37.9	2.3	5.728	-3.4	-20.48
Max =					**1.20**					**1.63**					**3.11**

Notes

1) Peak flow is equal to the product of 2.78 x C x I x A

2) Rainfall Intensity, $I = A/(Tc+C)^B$

3) Release Rate = Min (Release Rate, Peak Flow)

4) Storage Rate = Peak Flow - Release Rate

5) Storage = Duration x Storage Rate

6) Maximium Storage = Max Storage Over Duration

7) Parameters a,b,c are for City of Ottawa

TABLE D-13

Storage Volumes for 2-year, 5-Year and 100-Year Storms

Area No: **S07** **LOWER TERRACE**

C_{AVG} = 0.90 (2-yr)

C_{AVG} = 0.90 (5-yr)

C_{AVG} = 1.00 (100-yr, Max 1.0)

Time Interval = 1.00 (mins)

Drainage Area = 0.0318 (hectares)

Duration (min)	Release Rate = 3.2 (L/sec); Return Period = 2 (years); IDF Parameters, A = 732.951, B = 0.810, C = 6.199; (I = A/(T_c+C))					Release Rate = 4.3 (L/sec); Return Period = 5 (years); IDF Parameters, A = 998.071, B = 0.814, C = 6.053; (I = A/(T_c+C))					Release Rate = 8.3 (L/sec); Return Period = 100 (years); IDF Parameters, A = 1735.688, B = 0.820, C = 6.014; (I = A/(T_c+C))				
	Rainfall Intensity, I (mm/hr)	Peak Flow (L/sec)	Release Rate (L/sec)	Storage Rate (L/sec)	Storage (m^3)	Rainfall Intensity, I (mm/hr)	Peak Flow (L/sec)	Release Rate (L/sec)	Storage Rate (L/sec)	Storage (m^3)	Rainfall Intensity, I (mm/hr)	Peak Flow (L/sec)	Release Rate (L/sec)	Storage Rate (L/sec)	Storage (m^3)
0	167.2	13.3	3.20	10.1	0.00	230.5	18.3	4.348	14.0	0.00	398.6	35.2	8.279	26.9	0.00
1	148.1	11.8	3.20	8.6	0.51	203.5	16.2	4.348	11.8	0.71	351.4	31.0	8.279	22.7	1.36
2	133.3	10.6	3.20	7.4	0.89	182.7	14.5	4.348	10.2	1.22	315.0	27.8	8.279	19.5	2.34
3	121.5	9.7	3.20	6.4	1.16	166.1	13.2	4.348	8.8	1.59	286.0	25.3	8.279	17.0	3.06
4	111.7	8.9	3.20	5.7	1.36	152.5	12.1	4.348	7.8	1.86	262.4	23.2	8.279	14.9	3.57
5	103.6	8.2	3.20	5.0	1.51	141.2	11.2	4.348	6.9	2.06	242.7	21.4	8.279	13.1	3.94
6	96.6	7.7	3.20	4.5	1.61	131.6	10.5	4.348	6.1	2.20	226.0	20.0	8.279	11.7	4.20
7	90.7	7.2	3.20	4.0	1.68	123.3	9.8	4.348	5.4	2.29	211.7	18.7	8.279	10.4	4.37
8	85.5	6.8	3.20	3.6	1.72	116.1	9.2	4.348	4.9	2.34	199.2	17.6	8.279	9.3	4.47
9	80.9	6.4	3.20	3.2	1.74	109.8	8.7	4.348	4.4	2.36	188.3	16.6	8.279	8.3	4.50
10	76.8	6.1	3.20	2.9	1.74	104.2	8.3	4.348	3.9	2.36	178.6	15.8	8.279	7.5	4.49
11	73.2	5.8	3.20	2.6	1.72	99.2	7.9	4.348	3.5	2.33	169.9	15.0	8.279	6.7	4.44
12	69.9	5.6	3.20	2.3	1.69	94.7	7.5	4.348	3.2	2.29	162.1	14.3	8.279	6.0	4.35
13	66.9	5.3	3.20	2.1	1.65	90.6	7.2	4.348	2.9	2.23	155.1	13.7	8.279	5.4	4.22
14	64.2	5.1	3.20	1.9	1.59	86.9	6.9	4.348	2.6	2.15	148.7	13.1	8.279	4.9	4.07
15	61.8	4.9	3.20	1.7	1.53	83.6	6.6	4.348	2.3	2.06	142.9	12.6	8.279	4.3	3.90
16	59.5	4.7	3.20	1.5	1.46	80.5	6.4	4.348	2.0	1.96	137.5	12.1	8.279	3.9	3.71
17	57.4	4.6	3.20	1.4	1.38	77.6	6.2	4.348	1.8	1.85	132.6	11.7	8.279	3.4	3.50
18	55.5	4.4	3.20	1.2	1.30	75.0	6.0	4.348	1.6	1.74	128.1	11.3	8.279	3.0	3.27
19	53.7	4.3	3.20	1.1	1.21	72.5	5.8	4.348	1.4	1.61	123.9	10.9	8.279	2.7	3.03
20	52.0	4.1	3.20	0.9	1.12	70.3	5.6	4.348	1.2	1.48	120.0	10.6	8.279	2.3	2.77
Max =					**1.74**					**2.36**					**4.50**

Notes

1) Peak flow is equal to the product of 2.78 x C x I x A

2) Rainfall Intensity, $I = A/(Tc+C)^B$

3) Release Rate = Min (Release Rate, Peak Flow)

4) Storage Rate = Peak Flow - Release Rate

5) Storage = Duration x Storage Rate

6) Maximium Storage = Max Storage Over Duration

7) Parameters a,b,c are for City of Ottawa

TABLE D-14
ESTIMATION OF ROOF STORAGE AND OUTFLOW - TOWER B

WATTS ADJ ACCUTROL WEIR FLOW RATES (Flow Rates at Various Depths)

Depth	Weir Position					
	1-None	2-Closed	3-25% open	4-50% open	5-75% open	6-Full Open
	Max Flow Rate per wier @150mm in gpm					
0	0	0	0	0	0	0
0.025	0	5	5	5	5	5
0.05	0	5	10	10	10	10
0.075	0	5	11.25	12.35	13.75	15
0.1	0	5	12.5	15	17.5	20
0.125	0	5	13.75	17.5	21.25	25
0.15	0	5	15	20	25	30

WATTS ADJ ACCUTROL WEIR FLOW RATES (Data From Manufacturer's Catalog)

Weir Position	Flow (gpm) per depth							Max Flow Rate per Weir @150mm
	0	25	50	75	100	125	150	
	0	0.025	0.05	0.075	0.1	0.125	0.15	
1-None	0	0	0	0	0	0	0	0
2-Closed	0	5	5	5	5	5	5	0.315
3-25% open	0	5	10	11.25	12.5	13.75	15	0.946
4-50% open	0	5	10	12.35	15	17.5	20	1.262
5-75% open	0	5	10	13.75	17.5	21.25	25	1.577
6-Full Open	0	5	10	15	20	25	30	1.893

GRAPH OF FLOW RATE VERSUS DEPTH FOR VARIOUS WEIR POSITIONS

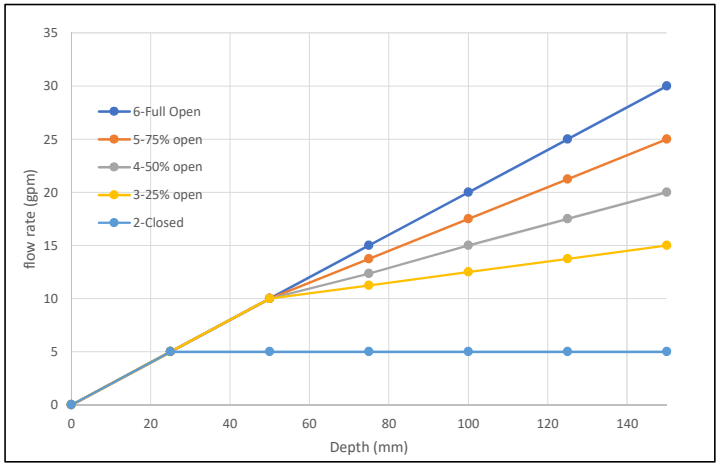

BUILDING ROOF INFORMATION

Buidling Number	**Tower B**	
Total Roof Area (m2)	**1307**	
Minimium Number of Drains Required	1.5	*Minimium of 1 drain every 900 sqaure metres (OBC 7.4.10.4)*
15-min Rainfall Factor for Ottawa (mm)	**23**	*(OBC Supp SB-1)*
Max Permitted Load from All Drains (Litres)	30,061	
Max Permitted Load from All Drains (L/sec)	33.4	*Hydraulic Load expressed in L/sec (OBC Section 7.4.10.3)*
Estimated area per drain (m2)	400	
Estimated Distance from roof edge to drains (m)	**10**	*Not more than 15m from Edge of Roof and 30m to Adjacent Dains (OBC Section 7.4.10.3)*
Estimated No. of Drains Requried	4	*Based on Total Roof Area / Area per Drain*
Actual No. of Drains Used	6	*Use if known*
Effecive Roof Percentage (%)	**85%**	*Allowance for ±200 s.m. of Mechanical units on roof*
Effecive Total Roof Area (m2)	1111	
Area per Drain (m2)	185	*Based on Effectiive Roof Area / Actual Number of Drains Used*
Max Depth of Ponding at Drains (mm)	**150**	
Estimated Total Volume for Ponding on Roof (m3)	65.4	*Prisim formula, V = 1/3*A*d*
Maximium release rate per drain at 150mm (usgpm)	**15**	*Based on 1 Wier Per Drain and Fully Open Position*
Max Release Rate from Roof (L/sec)	5.7	*Based on Maximum Depth of Ponding of 150mm*
Equiv Runoff C for 100-yr Storm	0.09	*Based on 100-yr storm Intensity of 178.6 mm/hr, where I =1735.688 / (Tc + 6.014)^0.820, with Tc=10min)*

RATING CURVE FOR ROOF

DISCHARGE VERSUS DEPTH				AREA VERSUS DEPTH			Total Ponding Volume - All Drains (m3)
Ponding Depth (m)	Discharge Rate Per Drain (gpm)	Discharge Rate Per Drain (m3/sec)	Total Discharge All Drains (m3/sec)	Ponding Depth (m)	Ponding Area (m2)	Ponding Volume Per Drain (m3)	
0	0	0.00	0.00000	0	0.0	0.0	0.0
0.025	5	0.32	0.00189	0.025	5.1	0.0	0.3
0.05	10	0.63	0.00379	0.05	20.6	0.3	2.1
0.075	11.25	0.71	0.00426	0.075	46.3	1.2	6.9
0.1	12.5	0.79	0.00473	0.1	82.3	2.7	16.5
0.125	13.75	0.87	0.00520	0.125	128.6	5.4	32.1
0.15	15	0.95	0.00568	0.15	185.2	9.3	55.5
Weir Position = **3-25% open**							

RATING CURVE FOR MODELLING OUTLET

Head or Ponding Depth (m)	Outlfow (L/sec)
0	0.0000
0.025	1.8927
0.05	3.7854
0.075	4.2586
0.1	4.7318
0.125	5.2049
0.15	5.6781

RATING CURVE FOR MODELLING ROOF STORAGE

Head or Ponding Depth (m)	Ponding Area (m2)
0	0.0
0.025	5.1
0.05	20.6
0.075	46.3
0.1	82.3
0.125	128.6
0.15	185.2

TABLE D-15
ESTIMATION OF ROOF STORAGE AND OUTFLOW - TOWER C

WATTS ADJ ACCUTROL WEIR FLOW RATES (Flow Rates at Various Depths)

Depth	Weir Position					
	1-None	2-Closed	3-25% open	4-50% open	5-75% open	6-Full Open
	Max Flow Rate per wier @150mm in gpm					
0	0	0	0	0	0	0
0.025	0	5	5	5	5	5
0.05	0	5	10	10	10	10
0.075	0	5	11.25	12.35	13.75	15
0.1	0	5	12.5	15	17.5	20
0.125	0	5	13.75	17.5	21.25	25
0.15	0	5	15	20	25	30

WATTS ADJ ACCUTROL WEIR FLOW RATES (Data From Manufacturer's Catalog)

Weir Position	Flow (gpm) per depth							Max Flow Rate per Weir @150mm
	0	25	50	75	100	125	150	
	0	0.025	0.05	0.075	0.1	0.125	0.15	
1-None	0	0	0	0	0	0	0	0
2-Closed	0	5	5	5	5	5	5	0.315
3-25% open	0	5	10	11.25	12.5	13.75	15	0.946
4-50% open	0	5	10	12.35	15	17.5	20	1.262
5-75% open	0	5	10	13.75	17.5	21.25	25	1.577
6-Full Open	0	5	10	15	20	25	30	1.893

GRAPH OF FLOW RATE VERSUS DEPTH FOR VARIOUS WEIR POSITIONS

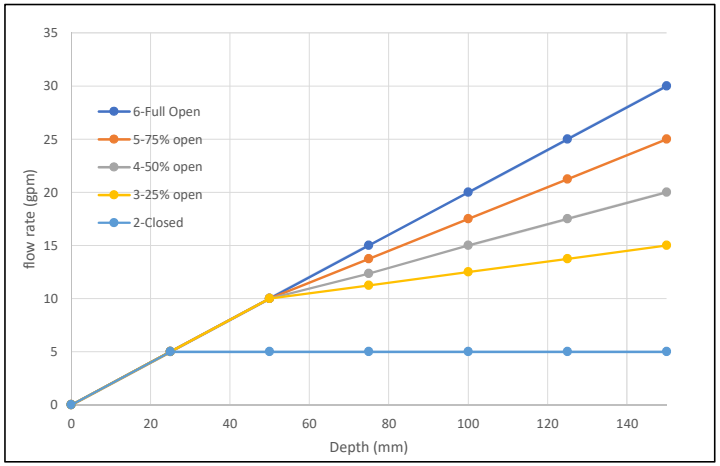

BUILDING ROOF INFORMATION

Buidling Number	**Tower C**	
Total Roof Area (m2)	**1301**	
Minimium Number of Drains Required	1.4	*Minimium of 1 drain every 900 sqaure metres (OBC 7.4.10.4)*
15-min Rainfall Factor for Ottawa (mm)	**23**	*(OBC Supp SB-1)*
Max Permitted Load from All Drains (Litres)	29,923	
Max Permitted Load from All Drains (L/sec)	33.2	*Hydraulic Load expressed in L/sec (OBC Section 7.4.10.3)*
Estimated area per drain (m2)	400	
Estimated Distance from roof edge to drains (m)	**10**	*Not more than 15m from Edge of Roof and 30m to Adjacent Dains (OBC Section 7.4.10.3)*
Estimated No. of Drains Requried	4	*Based on Total Roof Area / Area per Drain*
Actual No. of Drains Used	6	*Use if known*
Effecive Roof Percentage (%)	**85%**	*Allowance for ±200 s.m. of Mechanical units on roof*
Effecive Total Roof Area (m2)	1106	
Area per Drain (m2)	184	*Based on Effectiive Roof Area / Actual Number of Drains Used*
Max Depth of Ponding at Drains (mm)	**150**	
Estimated Total Volume for Ponding on Roof (m3)	65.1	*Prisim formula, V = 1/3*A*d*
Maximium release rate per drain at 150mm (usgpm)	**15**	*Based on 1 Wier Per Drain and Fully Open Position*
Max Release Rate from Roof (L/sec)	5.7	*Based on Maximum Depth of Ponding of 150mm*
Equiv Runoff C for 100-yr Storm	0.09	*Based on 100-yr storm Intensity of 178.6 mm/hr, where I =1735.688 / (Tc + 6.014)^0.820, with Tc=10min)*

RATING CURVE FOR ROOF

DISCHARGE VERSUS DEPTH				AREA VERSUS DEPTH			Total Ponding Volume - All Drains (m3)
Ponding Depth (m)	Discharge Rate Per Drain (gpm)	Discharge Rate Per Drain (m3/sec)	Total Discharge All Drains (m3/sec)	Ponding Depth (m)	Ponding Area (m2)	Ponding Volume Per Drain (m3)	
0	0	0.00	0.00000	0	0.0	0.0	0.0
0.025	5	0.32	0.00189	0.025	5.1	0.0	0.3
0.05	10	0.63	0.00379	0.05	20.5	0.3	2.0
0.075	11.25	0.71	0.00426	0.075	46.1	1.2	6.9
0.1	12.5	0.79	0.00473	0.1	81.9	2.7	16.4
0.125	13.75	0.87	0.00520	0.125	128.0	5.3	32.0
0.15	15	0.95	0.00568	0.15	184.3	9.2	55.3
Weir Position =	**3-25% open**						

RATING CURVE FOR MODELLING OUTLET

Head or Ponding Depth (m)	Outlfow (L/sec)
0	0.0000
0.025	1.8927
0.05	3.7854
0.075	4.2586
0.1	4.7318
0.125	5.2049
0.15	5.6781

RATING CURVE FOR MODELLING ROOF STORAGE

Head or Ponding Depth (m)	Ponding Area (m2)
0	0.0
0.025	5.1
0.05	20.5
0.075	46.1
0.1	81.9
0.125	128.0
0.15	184.3

TABLE D-16
ESTIMATION OF ROOF STORAGE AND OUTFLOW - PODIUM LINK

WATTS ADJ ACCUTROL WEIR FLOW RATES (Flow Rates at Various Depths)

Depth	Weir Position					
	1-None	2-Closed	3-25% open	4-50% open	5-75% open	6-Full Open
	Max Flow Rate per wier @150mm in gpm					
0	0	0	0	0	0	0
0.025	0	5	5	5	5	5
0.05	0	5	10	10	10	10
0.075	0	5	11.25	12.35	13.75	15
0.1	0	5	12.5	15	17.5	20
0.125	0	5	13.75	17.5	21.25	25
0.15	0	5	15	20	25	30

WATTS ADJ ACCUTROL WEIR FLOW RATES (Data From Manufacturer's Catalog)

Weir Position	Flow (gpm) per depth							Max Flow Rate per Weir @150mm
	0	25	50	75	100	125	150	
	0	0.025	0.05	0.075	0.1	0.125	0.15	
1-None	0	0	0	0	0	0	0	0
2-Closed	0	5	5	5	5	5	5	0.315
3-25% open	0	5	10	11.25	12.5	13.75	15	0.946
4-50% open	0	5	10	12.35	15	17.5	20	1.262
5-75% open	0	5	10	13.75	17.5	21.25	25	1.577
6-Full Open	0	5	10	15	20	25	30	1.893

GRAPH OF FLOW RATE VERSUS DEPTH FOR VARIOUS WEIR POSITIONS

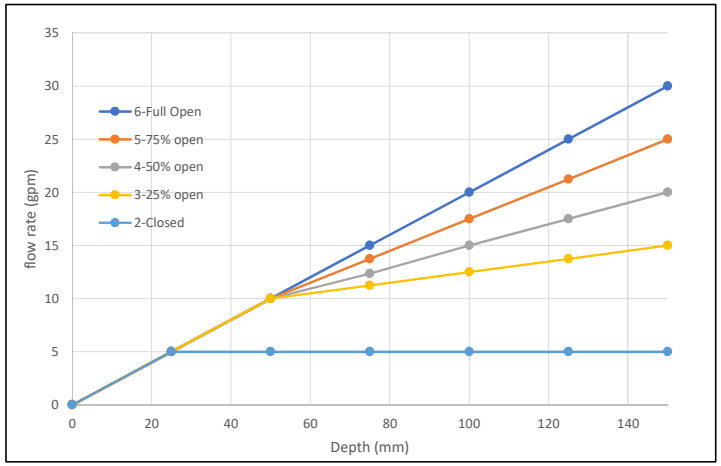

BUILDING ROOF INFORMATION

Buidling Number	**Towers B & C Link**	
Total Roof Area (m2)	**1696**	
Minimium Number of Drains Required	1.9	*Minimium of 1 drain every 900 sqaure metres (OBC 7.4.10.4)*
15-min Rainfall Factor for Ottawa (mm)	**23**	*(OBC Supp SB-1)*
Max Permitted Load from All Drains (Litres)	39,008	
Max Permitted Load from All Drains (L/sec)	43.3	*Hydraulic Load expressed in L/sec (OBC Section 7.4.10.3)*
Estimated area per drain (m2)	400	
Estimated Distance from roof edge to drains (m)	**10**	*Not more than 15m from Edge of Roof and 30m to Adjacent Dains (OBC Section 7.4.10.3)*
Estimated No. of Drains Requried	5	*Based on Total Roof Area / Area per Drain*
Actual No. of Drains Used	5	*Use if known*
Effecive Roof Percentage (%)	**90%**	*Allowance for 100 s.m. of Mechanical units on roof*
Effecive Total Roof Area (m2)	1526	
Area per Drain (m2)	305	*Based on Effectiive Roof Area / Actual Number of Drains Used*
Max Depth of Ponding at Drains (mm)	**150**	
Estimated Total Volume for Ponding on Roof (m3)	84.8	*Prisim formula, V = 1/3*A*d*
Maximium release rate per drain at 150mm (usgpm)	**5**	*Based on 1 Wier Per Drain and Fully Open Position*
Max Release Rate from Roof (L/sec)	1.6	*Based on Maximum Depth of Ponding of 150mm*
Equiv Runoff C for 100-yr Storm	0.02	*Based on 100-yr storm Intensity of 178.6 mm/hr, where I =1735.688 / (Tc + 6.014)^0.820, with Tc=10min)*

RATING CURVE FOR ROOF

DISCHARGE VERSUS DEPTH				AREA VERSUS DEPTH			Total Ponding Volume - All Drains (m3)
Ponding Depth (m)	Discharge Rate Per Drain (gpm)	Discharge Rate Per Drain (m3/sec)	Total Discharge All Drains (m3/sec)	Ponding Depth (m)	Ponding Area (m2)	Ponding Volume Per Drain (m3)	
0	0	0.00	0.00000	0	0.0	0.0	0.0
0.025	5	0.32	0.00158	0.025	8.5	0.1	0.4
0.05	5	0.32	0.00158	0.05	33.9	0.6	2.8
0.075	5	0.32	0.00158	0.075	76.3	1.9	9.5
0.1	5	0.32	0.00158	0.1	135.7	4.5	22.6
0.125	5	0.32	0.00158	0.125	212.0	8.8	44.2
0.15	5	0.32	0.00158	0.15	305.3	15.3	76.3
Weir Position =	**2-Closed**						

RATING CURVE FOR MODELLING OUTLET

Head or Ponding Depth (m)	Outlfow (L/sec)
0	0.0000
0.025	1.5773
0.05	1.5773
0.075	1.5773
0.1	1.5773
0.125	1.5773
0.15	1.5773

RATING CURVE FOR MODELLING ROOF STORAGE

Head or Ponding Depth (m)	Ponding Area (m2)
0	0.0
0.025	8.5
0.05	33.9
0.075	76.3
0.1	135.7
0.125	212.0
0.15	305.3

Appendix E – Consultation / Correspondence

Email on Water System Boundary Conditions

Moe Ghadban

From: Baker, Adam <adam.baker@ottawa.ca>
Sent: Wednesday, March 25, 2020 12:25 PM
To: Bruce Thomas
Cc: Jason Fitzpatrick
Subject: RE: 150 Central Park Drive Request for Boundary Conditions
Attachments: 150 Central Park March 2020.pdf

Hi Bruce and Jason,

Please find below and attached the boundary conditions for 150 Central Park –

The following are boundary conditions, HGL, for hydraulic analysis at 150 Central Park (zone ME) assumed to be connected to the 305mm and 406mm on Central Park (see attached PDF for location).

Note: HGL is the same at both connections

Minimum HGL = 155.0m

Maximum HGL = 161.0m. The maximum pressure is estimated to be above 80 psi. A pressure check at completion of construction is recommended to determine if pressure control is required.

MaxDay + FireFlow (133 L/s) = 153.0m

MaxDay + FireFlow (167 L/s) = 150.0m

These are for current conditions and are based on computer model simulation.

Disclaimer: The boundary condition information is based on current operation of the city water distribution system. The computer model simulation is based on the best information available at the time. The operation of the water distribution system can change on a regular basis, resulting in a variation in boundary conditions. The physical properties of watermains deteriorate over time, as such must be assumed in the absence of actual field test data. The variation in physical watermain properties can therefore alter the results of the computer model simulation.

Thank you,
Adam

Adam Baker, EIT
Engineering Intern
Planning, Infrastructure and Economic Development Department - Services de la planification, de l'infrastructure et du développement économique
Development Review - South Branch
City of Ottawa | Ville d'Ottawa
110 Laurier Avenue West Ottawa, ON | 110, avenue. Laurier Ouest. Ottawa (Ontario) K1P 1J1
613.580.2424 ext./poste 26552, Adam.Baker@ottawa.ca

From: Bruce Thomas <bruce.thomas@exp.com>
Sent: March 25, 2020 8:08 AM
To: Baker, Adam <adam.baker@ottawa.ca>

Appendix F – Background Information

Central Park Subdivision Retirement Residence, Site Servicing Plan 1

WATTS ACCUTROL Weir for Roof Drains

WATTS ACCUTROL Area Drain

Tempest Inlet Control Devises (Page 9)

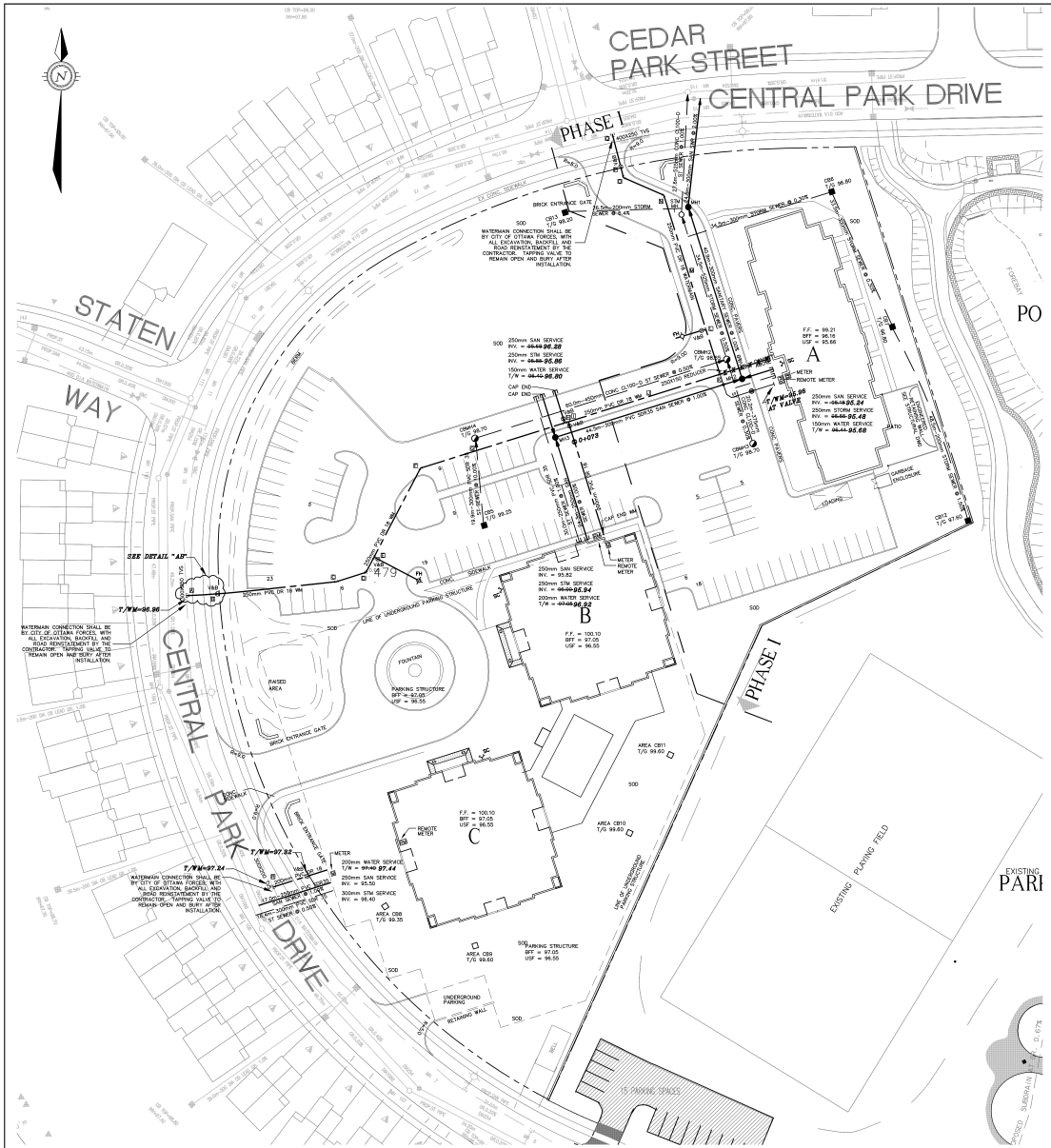

SANITARY AND STORM SEWER DATA								
Structure From	Structure To	Diameter (mm)	Type of pipe	Class of pipe	Length (m)	Slope (%)	Invert Elevation	
							Upstream	Downstream
BUILDING 'A'	MH2	250	PVC	SDR 35	9.0	1.00%	95.18	95.08
BUILDING 'B'	MH3	250	PVC	SDR 35	24.3	1.00%	95.82	95.58
MH3	MH2	300	PVC	SDR 35	44.5	1.00%	95.53	95.08
MH2	MH1	300	PVC	SDR 35	40.9	1.00%	95.03	94.62
MH1	EX SAN SWR	300	PVC	SDR 35	24.8	2.00%	94.57	94.07
BUILDING 'C'	EX SAN SWR	250	PVC	SDR 35	33.5	1.00%	95.50	95.33
BUILDING 'A'	TEE	250	PVC	SDR 35	9.0	1.00%	95.55	95.44
CB5	CBMH4	300	PVC	SDR 35	19.9	10.00%	97.85	95.85
CBMH4	CBMH2	450	CONC	CL 100-D	60.0	0.50%	95.65	95.35
CBMH3	CBMH2	375	CONC	CL 100-D	20.2	0.30%	95.48	95.42
CBMH2	STM MH1	525	CONC	CL 100-D	34.5	0.50%	95.27	95.10
STM MH1	EX MH115	525	CONC	CL 100-D	27.6	1.00%	95.07	94.75
CB12	CB7	200	PVC	SDR 35	48.5	1.50%	96.28	95.55
CB7	CB6	300	PVC	SDR 35	33.5	0.30%	95.50	95.40
CB6	TEE	300	PVC	SDR 35	34.5	0.30%	95.34	95.24
BUILDING 'B'	TEE	250	PVC	SDR 35	30.0	1.00%	96.00	95.75
BUILDING 'C'	EX STM SWR	250	PVC	SDR 35	18.4	1.00%	96.40	96.23
CB13	STM MH1	200	PVC	SDR 35	26.5	6.40%	96.80	95.10

MANHOLE STRUCTURE DATA						
No.	Invert Elevation					Remarks
	Grate	West Invert	East Invert	North Invert	South Invert	
EX MH115	98.80	~~91.91~~	~~91.78~~			
MH1	98.86			~~97.57~~ 94.60	~~97.76~~ 94.60	
MH2	98.84	~~95.00~~ 95.04	95.08	~~95.53~~ 95.08		
MH3	99.07		~~95.53~~ 95.58	~~95.58~~ 95.63	~~95.58~~ 95.63	
EXMH115	98.80	~~94.80~~	~~94.68~~		~~94.78~~	
STM MH1	98.77			~~95.07~~ 94.88	~~95.10~~ 94.94	
CBMH2	98.65	~~95.35~~ 95.40		~~95.57~~ 95.38	~~95.53~~ 95.38	
CBMH3	~~99.70~~ 98.66			~~95.63~~ 95.63		
CBMH4	98.70		~~95.65~~ 95.68		~~95.85~~ 95.82	
CB5	99.25			~~97.85~~ 97.89		
CB6	~~99.80~~ 98.89	~~95.34~~ 95.40			~~95.40~~ 95.42	
CB7	~~99.80~~ 98.69			~~95.77~~ 95.74	~~95.25~~ 95.86	
CB12	~~97.80~~ 97.47			~~95.28~~ 95.40		
CB13	~~99.70~~ 98.16		~~96.80~~ 96.62			

WATERMAIN TABLE					
Location	Station	Description	Finished Grade (m)	Top of Watermain (m)	As-Built Watermain (m)
A	0+000	300mmx250mm TVS	99.55	MATCH	
A1	0+005.5				96.82
A2	0+005	45° BEND			96.68
A3	0+005.5	45° BEND			97.23
B	0+007	VALVE AND VALVE BOX	99.80	97.40	97.40
C	~~0+080~~ 0+074.5	11.25° BEND	99.30	96.90	97.19
D	0+041.3	45° BEND	99.25	96.85	96.83
E	~~0+044~~ 0+038.8	250mmx150mm TEE, VBB, HYD	99.23	96.83	96.83
F	0+068	45° BEND	98.80	96.40	96.81
G	0+081.2		98.65	96.25	96.99
H	0+102.3	250mmx250mm TEE	98.85	96.45	96.70
I	~~0+110~~ 0+107	250mmx250mm TEE	98.85	96.45	96.85
J	~~0+125~~ 0+122.5		98.90	96.50	96.89
K	0+139.3	250mmx250mm TEE	98.70	96.30	96.81
L	0+150	250mmx150mm TEE HYD	98.65	96.25	96.22
M	0+166		98.90	96.40	96.42
N	0+182	45° BEND	98.90	96.50	96.64
O	0+192	45° BEND	98.98	96.58	96.42
P	0+194.5	VALVE AND VALVE BOX	99.00	96.60	96.43
Q	0+202	400mmx250mm TVS	98.75		96.35
R	0+000	300mmx200mm TVS	99.70	MATCH	

NOTE

FOR BUILDING 'A' THE PEAK WATER DEMAND IS 200 l/sp. GPM FOR A TOTAL FIXTURE UNIT COUNT OF 950.

FOR BUILDING 'B' THE PEAK WATER DEMAND IS 280 l/sp. GPM FOR A TOTAL FIXTURE UNIT COUNT OF 1600.

FOR BUILDING 'C' THE PEAK WATER DEMAND IS 280 l/sp. GPM FOR A TOTAL FIXTURE UNIT COUNT OF 1600.

DETAIL AB

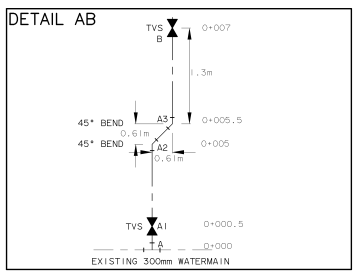

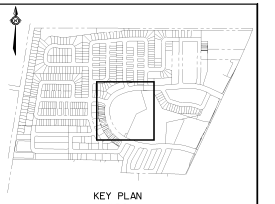

KEY PLAN
N.T.S.

LEGEND

DESCRIPTION	PROPOSED	EXISTING
ASPHALT EDGE		
CONCRETE BARRIER CURB		
SIDEWALK & TYPE	ASPH CONC	ASPH CONC
PROPERTY LINE		
SANITARY SEWER & MANHOLE (TYPE & SIZE)	MH 1	MH
STORM SEWER & MANHOLE (TYPE & SIZE)	MH 2	MH
CATCHBASIN	CB1	CB
CATCHBASIN MANHOLE	CBMH 300	CBMH 300
DOUBLE CATCHBASIN	DCB	
DITCH INLET CATCHBASIN	DICB	
VALVE & BOX	VBB	VBB
WATER SERVICE VALVE	WSV	WSV
FIRE HYDRANT AND VALVE		
AREA CATCHBASIN	CB1	CB

Ottawa

No.	DESCRIPTION	DATE	BY	APP'D
7	RECORD DRAWING	21/06/03	ABZ	CCC
6	REVISED AS PER CITY OF OTTAWA	5/09/01	CCC	CCC
5	SUBMITTED FOR APPROVAL	13/08/01	CCC	CCC
4	SUBMITTED FOR BUILDING PERMIT	29/06/01	CCC	CCC
3	ENTRANCE ALIGNMENT	27/06/01	CCC	CCC
2	GENERAL REVISIONS	03/05/01	CCC	CCC
1	SUBMITTED FOR APPROVAL	25/04/01	CCC	CCC

REVISIONS

HORIZONTAL 1:500

OLIVER, MANGIONE, McCALLA & ASSOCIATES
a division of Trow Consulting Engineers Ltd.
154 COLONNADE ROAD SOUTH, NEPEAN, ONTARIO K2E 7J5
Tel: (613) 225-9640
Fax: (613) 225-7337

CLIENT: ASHCROFT HOMES

PROJECT: CENTRAL PARK SUBDIVISION
RETIREMENT RESIDENCE

TITLE: SITE SERVICING PLAN 1

design by	C. COLLINS
drawn by	C. COLLINS
checked by	B. THOMAS
date	29/06/01
scale	HORIZ 1:500
project no.	MP12491J
drawing no.	SP1
revision no.	

R:\12000\12400\12491J Retirement Complex\RECORD DWGS\MP12491J-SP1-REV7-RECORD.dwg, SP1, 04/28/2003 08:05:35 AM, alexandra, XP pltdrv.pc3, ANSI D (24 x 36 inches), 1:1

WATTS®	Adjustable Accutrol Weir Tag: _____	Adjustable Flow Control for Roof Drains

ADJUSTABLE ACCUTROL (for Large Sump Roof Drains only)

For more flexibility in controlling flow with heads deeper than 2", Watts Drainage offers the Adjustable Accutrol. The Adjustable Accutrol Weir is designed with a single parabolic opening that can be covered to restrict flow above 2" of head to less than 5 gpm per inch, up to 6" of head. To adjust the flow rate for depths over 2" of head, set the slot in the adjustable upper cone according to the flow rate required. Refer to Table 1 below.
Note: Flow rates are directly proportional to the amount of weir opening that is exposed.

EXAMPLE:

For example, if the adjustable upper cone is set to cover 1/2 of the weir opening, flow rates above 2"of head will be restricted to 2-1/2 gpm per inch of head.

Therefore, at 3"of head, the flow rate through the Accutrol Weir that has 1/2 the slot exposed will be:
[5 gpm (per inch of head) x 2 inches of head] + 2-1/2 gpm (for the third inch of head) = 12-1/2 gpm.

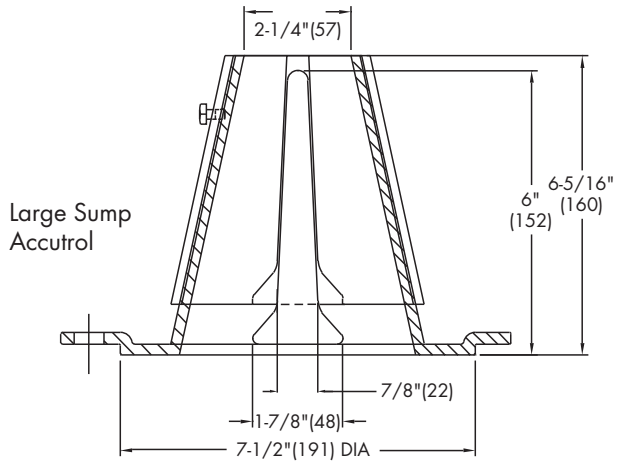

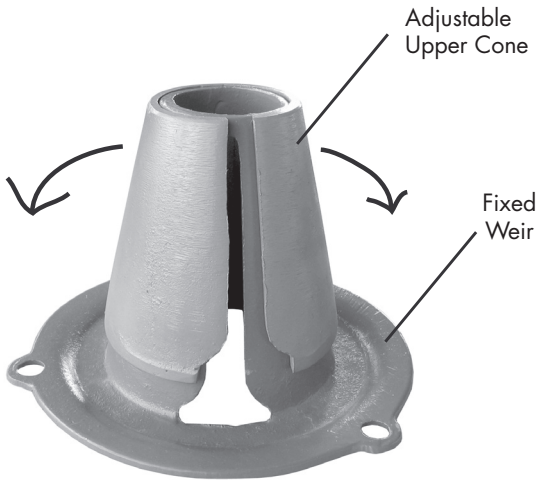

1/2 Weir Opening Exposed Shown Above

TABLE 1. Adjustable Accutrol Flow Rate Settings

Weir Opening Exposed	1"	2"	3"	4"	5"	6"
	Flow Rate (gallons per minute)					
Fully Exposed	5	10	15	20	25	30
3/4	5	10	13.75	17.5	21.25	25
1/2	5	10	12.5	15	17.5	20
1/4	5	10	11.25	12.5	13.75	15
Closed	5	5	5	5	5	5

Job Name _____ Contractor _____

Job Location _____ Contractor's P.O. No. _____

Engineer _____ Representative _____

Watts product specifications in U.S. customary units and metric are approximate and are provided for reference only. For precise measurements, please contact Watts Technical Service. Watts reserves the right to change or modify product design, construction, specifications, or materials without prior notice and without incurring any obligation to make such changes and modifications on Watts products previously or subsequently sold.

USA: Tel: (800) 338-2581 • Fax: (828) 248-3929 • Watts.com
Canada: Tel: (905) 332-4090 • Fax: (905) 332-7068 • Watts.ca
Latin America: Tel: (52) 81-1001-8600 • Fax: (52) 81-8000-7091 • Watts.com

WATTS®
A Watts Water Technologies Company

© 2016 Watts

FD-460-AF

Tag: _____

Area Drain with 12" Square Adjustable Top

Components:

B2

FD-460-AF

SPECIFICATION: Watts Drainage Products FD-460-AF epoxy coated cast iron area drain with anchor flange, weepholes, 12-3/4"x12-3/4"(324x324) adjustable top with ductile iron (standard) tractor grate, no hub (MJ) (standard) outlet.

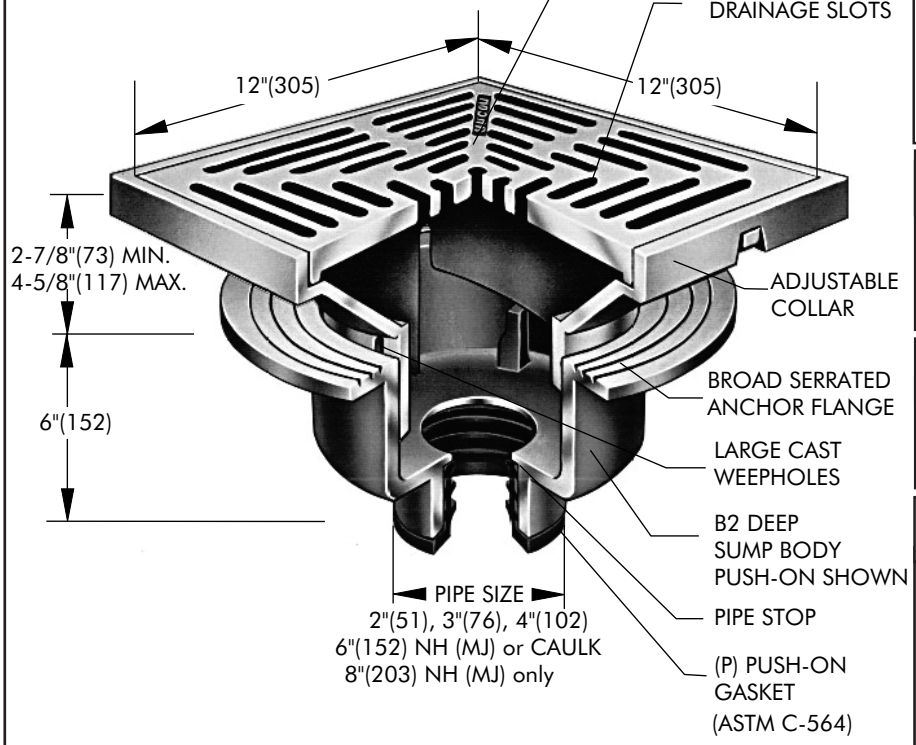

Order Code: FD-46☐☐-☐-☐

Ex. FD-462P-AF-1

Pipe Sizing (Select One)		
Suffix	**Description**	
2	2"(51) Pipe Size	☐
3	3"(76) Pipe Size	☐
4	4"(102) Pipe Size	☐
6	6"(152) Pipe Size	☐
8	8"(203) Pipe Size	☐

Outlet Type (Select One)		
Suffix	**Description**	
NH	No Hub (MJ)	☐
P	Push On	☐
T	Threaded Outlet	☐
X	Inside Caulk	☐

Grate (Select One)		
Suffix	**Description**	
AF-1	Nickel Bronze	☐
AF-4	Ductile Iron	☐
AF-28	Cast S.S.	☐

Options (Select One or More)		
Suffix	**Description**	
-5	Sediment Bucket	☐
-6	Vandal Proof	☐
-7	Trap Primer Tapping	☐
-8	Backwater Valve (3" / 4" Only)	☐
-9	Hinged Grate	☐
-10	Secured Top c/w Phillips screws	☐
-12	Galvanized Top	☐
-13	All Galvanized	☐
-15	Adj. Extension (4" to 5-5/8")	☐
-26	Hinged Locking Grate	☐
-34	Closure Plug	☐
-113M	Special Epoxy from 3M Range	☐
-Z	Elastomeric Flange	☐

Load Rating & Free Area

Suffix	Load Rating	Free Area Sq. In.
AF-1	*XHD	41
AF-4	*XHD	41
AF-28	*XHD	41

* The load classifications are in accordance with the American National Standards ASME A112.21.1M
ASME Ratings are as follows:
XHD - Safe Live Load 7500-10000 lbs.(3375-4500kg)
The above categories are given as a guide only.
Please consult factory.

Job Name _____ Contractor _____

Job Location _____ Contractor's P.O. No. _____

Engineer _____ Representative _____

WATTS Drainage reserves the right to modify or change product design or construction without prior notice and without incurring any obligation to make similar changes and modifications to products previously or subsequently sold. See your WATTS Drainage representative for any clarification. Dimensions are subject to manufacturing tolerances.

CANADA: 5435 North Service Road, Burlington, ON, L7L 5H7 TEL: 905-332-6718 TOLL-FREE: 1-888-208-8927 Website: www.wattsdrainage.ca

© Watts Drainage 2004

Chart 3: HF & MHF Preset Flow Curves

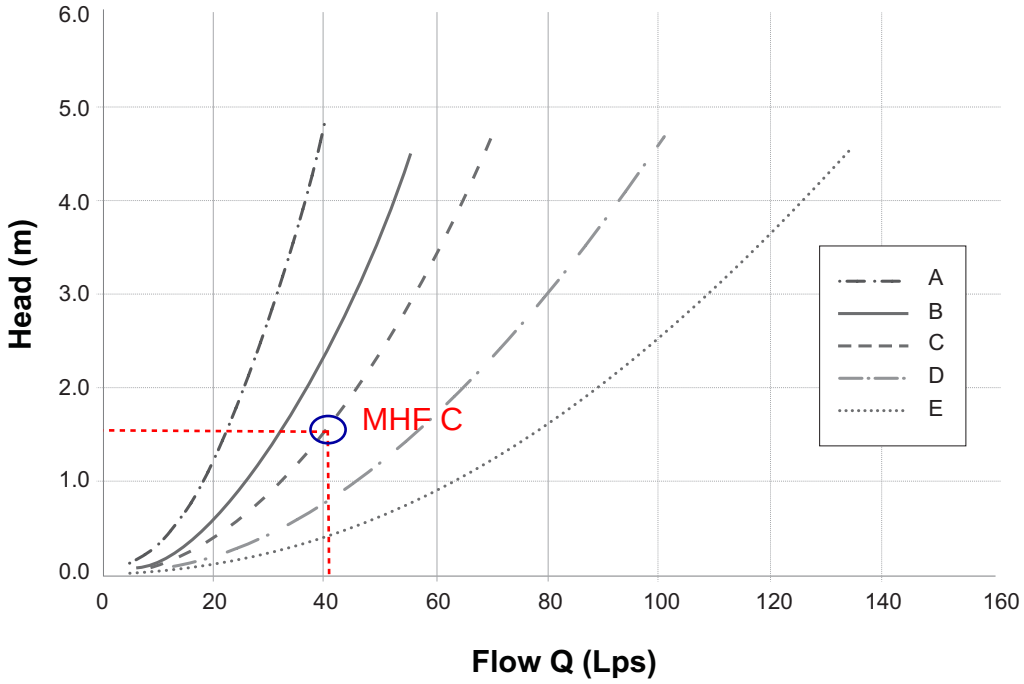

NOTE: Do not use or test the products in this manual with compressed air or other gases including air-over-water-boosters

Appendix G – Checklist

GENERAL CONTENT		RESPONSE
☐	Executive Summary (for larger reports only).	Not included
☒	Date and revision number of the report.	Date of report provided
☒	Location map and plan showing municipal address, boundary, and layout of proposed development.	Page 1, and Appendix A
☒	Development statistics, land use, density, adherence to zoning and official plan, and reference to applicable subwatershed and watershed plans that provide context to which individual developments must adhere.	Section 2 of report
☒	Summary of Pre-consultation Meetings with City and other approval agencies.	In Appendix E
☐	Reference and confirm conformance to higher level studies and reports (Master Servicing Studies, Environmental Assessments, Community Design Plans), or in the case where it is not in conformance, the proponent must provide justification and develop a defendable design criteria.	No Master Servicing Studies.
☒	Statement of objectives and servicing criteria.	Section 1 of report
☒	Identification of existing and proposed infrastructure available in the immediate area.	Section 2 & 3 of report
☐	Identification of Environmentally Significant Areas, watercourses and Municipal Drains potentially impacted by the proposed development (Reference can be made to the Natural Heritage Studies, if available).	Not applicable
☐	Concept level master grading plan to confirm existing and proposed grades in the development. This is required to confirm the feasibility of proposed stormwater management and drainage, soil removal and fill constraints, and potential impacts to neighbouring properties. This is also required to confirm that the proposed grading will not impede existing major system flow paths.	Not applicable
☐	Identification of potential impacts of proposed piped services on private services (such as wells and septic fields on adjacent lands) and mitigation required to address potential impacts.	Not applicable
☐	Proposed phasing of the development, if applicable.	Not applicable
☐	Reference to geotechnical studies and recommendations concerning servicing.	Not applicable
☒	All preliminary and formal site plan submissions should have the following information: Metric scale North arrow (including construction North) Key plan name and contact information of applicant and property owner Property limits including bearings and dimensions Existing and proposed structures and parking areas Easements, road widening and rights-of-way Adjacent street names	Functional Report, Civil and Architectural Plans provided all this information.
DEVELOPMENT SERVICING REPORT: WATER		**RESPONSE**
☐	Confirm consistency with Master Servicing Study, if available Availability of public infrastructure to service proposed development Identification of system constraints	Not applicable
☒	Identify boundary conditions	Section 4.5
☒	Confirmation of adequate domestic supply and pressure	Section 4.2
☒	Confirmation of adequate fire flow protection and confirmation that fire flow is calculated as per the Fire Underwriter's Survey. Output should show available fire flow at locations throughout the development.	Section 4.2
☒	Provide a check of high pressures. If pressure is found to be high, an assessment is required to confirm the application of pressure reducing valves.	Section 4.2 & Table B-5 Appendix B
☐	Definition of phasing constraints. Hydraulic modeling is required to confirm servicing for all defined phases of the project including the ultimate design	Not applicable
☒	Address reliability requirements such as appropriate location of shut-off valves Check on the necessity of a pressure zone boundary modification.	Section 4.2, Drawing C100
☒	Reference to water supply analysis to show that major infrastructure is capable of delivering sufficient water for the proposed land use. This includes data that shows that the expected demands under average day, peak hour and fire flow conditions provide water within the required pressure range	Section 4.4 & Table B-1, Table B-2, Appendix B
☒	Description of the proposed water distribution network, including locations of proposed connections to the existing system, provisions for necessary looping, and appurtenances (valves, pressure reducing valves, valve chambers, and fire hydrants) including special metering provisions.	Section 4.2

☐	Description of off-site required feeder mains, booster pumping stations, and other water infrastructure that will be ultimately required to service proposed development, including financing, interim facilities, and timing of implementation.	Not applicable
☒	Confirmation that water demands are calculated based on the City of Ottawa Design Guidelines.	Table B-1 Appendix B
☐	Provision of a model schematic showing the boundary conditions locations, streets, parcels, and building locations for reference.	Not applicable
DEVELOPMENT SERVICING REPORT: WASTEWATER		**RESPONSE**
☒	Summary of proposed design criteria (Note: Wet-weather flow criteria should not deviate from the City of Ottawa Sewer Design Guidelines. Monitored flow data from relatively new infrastructure cannot be used to justify capacity requirements for proposed infrastructure).	Section 5.1
☐	Confirm consistency with Master Servicing Study and/or justifications for deviations.	Not applicable
☒	Consideration of local conditions that may contribute to extraneous flows that are higher than the recommended flows in the guidelines. This includes groundwater and soil conditions, and age and condition of sewers.	Section 5.2
☒	Description of existing sanitary sewer available for discharge of wastewater from proposed development.	Section 5.2
☐	Verify available capacity in downstream sanitary sewer and/or identification of upgrades necessary to service the proposed development. (Reference can be made to previously completed Master Servicing Study if applicable)	Not applicable
☒	Calculations related to dry-weather and wet-weather flow rates from the development in standard MOE sanitary sewer design table (Appendix 'C') format.	Table C-1 in Appendix C
☒	Description of proposed sewer network including sewers, pumping stations, and forcemains.	Section 5.2
☐	Discussion of previously identified environmental constraints and impact on servicing (environmental constraints are related to limitations imposed on the development in order to preserve the physical condition of watercourses, vegetation, soil cover, as well as protecting against water quantity and quality).	Not applicable
☐	Pumping stations: impacts of proposed development on existing pumping stations or requirements for new pumping station to service development.	Not applicable
☐	Forcemain capacity in terms of operational redundancy, surge pressure and maximum flow velocity.	Not applicable
☐	Identification and implementation of the emergency overflow from sanitary pumping stations in relation to the hydraulic grade line to protect against basement flooding.	Not applicable
☐	Special considerations such as contamination, corrosive environment etc.	Not applicable
DEVELOPMENT SERVICING REPORT: STORMWATER CHECKLIST		**RESPONSE**
☒	Description of drainage outlets and downstream constraints including legality of outlets (i.e. municipal drain, right-of-way, watercourse, or private property)	Section 6
☐	Analysis of available capacity in existing public infrastructure.	Not applicable
☐	A drawing showing the subject lands, its surroundings, the receiving watercourse, existing drainage patterns, and proposed drainage pattern.	Site is too small to be considered
☐	Water quantity control objective (e.g. controlling post-development peak flows to pre-development level for storm events ranging from the 2 or 5 year event (dependent on the receiving sewer design) to 100 year return period); if other objectives are being applied, a rationale must be included with reference to hydrologic analyses of the potentially affected subwatersheds, taking into account long-term cumulative effects.	Not Applicable
☐	Water Quality control objective (basic, normal or enhanced level of protection based on the sensitivities of the receiving watercourse) and storage requirements.	Not Applicable
☒	Description of the stormwater management concept with facility locations and descriptions with references and supporting information.	Section 6.2 & 6.3
☐	Set-back from private sewage disposal systems. Watercourse and hazard lands setbacks.	Not Applicable
☒	Record of pre-consultation with the Ontario Ministry of Environment and the Conservation Authority that has jurisdiction on the affected watershed.	Appendix E
☐	Confirm consistency with sub-watershed and Master Servicing Study, if applicable study exists.	Not Applicable
☒	Storage requirements (complete with calculations) and conveyance capacity for minor events (1:5 year return period) and major events (1:100 year return period).	Section 6.9 & Table D-5 of Appendix D

☐	Identification of watercourses within the proposed development and how watercourses will be protected, or, if necessary, altered by the proposed development with applicable approvals.	Not Applicable
☒	Calculate pre and post development peak flow rates including a description of existing site conditions and proposed impervious areas and drainage catchments in comparison to existing conditions.	Section 6.6, 6.8 & Table D-1 & D-4 of Appendix D
☐	Any proposed diversion of drainage catchment areas from one outlet to another.	Not Applicable
☒	Proposed minor and major systems including locations and sizes of stormwater trunk sewers, and stormwater management facilities.	Section 6.8
☐	If quantity control is not proposed, demonstration that downstream system has adequate capacity for the post-development flows up to and including the 100-year return period storm event.	Not Applicable
☐	Identification of potential impacts to receiving watercourses Identification of municipal drains and related approval requirements.	Not Applicable
☒	Descriptions of how the conveyance and storage capacity will be achieved for the development.	Section 6.9
☒	100-year flood levels and major flow routing to protect proposed development from flooding for establishing minimum building elevations (MBE) and overall grading.	Site Grading and Erosion and Sediment Plan
☐	Inclusion of hydraulic analysis including hydraulic grade line elevations.	Not Applicable
☒	Description of approach to erosion and sediment control during construction for the protection of receiving watercourse or drainage corridors.	Section 7
☐	Identification of floodplains – proponent to obtain relevant floodplain information from the appropriate Conservation Authority. The proponent may be required to delineate floodplain elevations to the satisfaction of the Conservation Authority if such information is not available or if information does not match current conditions.	Not Applicable – No requirements from Conservation Authority
☐	Identification of fill constraints related to floodplain and geotechnical investigation.	See geotechnical report
☒	The Servicing Study shall provide a list of applicable permits and regulatory approvals necessary for the proposed development as well as the relevant issues affecting each approval. The approval and permitting shall include but not be limited to the following:	Appendix E
☐	Conservation Authority as the designated approval agency for modification of floodplain, potential impact on fish habitat, proposed works in or adjacent to a watercourse, cut/fill permits and Approval under Lakes and Rivers Improvement Act. The Conservation Authority is not the approval authority for the Lakes and Rivers Improvement Act. Where there are Conservation Authority regulations in place, approval under the Lakes and Rivers Improvement Act is not required, except in cases of dams as defined in theAct.	Not Applicable
☐	Application for Certificate of Approval (CofA) under the Ontario Water Resources Act.	Not Applicable
☐	Changes to Municipal Drains.	Not Applicable
☐	Other permits (National Capital Commission, Parks Canada, Public Works and Government Services Canada, Ministry of Transportation etc.)	Not Applicable
CONCLUSION CHECKLIST		**RESPONSE**
☒	Clearly stated conclusions and recommendations	In Section 8
☒	Comments received from review agencies including the City of Ottawa and information on how the comments were addressed. Final sign-off from the responsible reviewing agency.	Appendix E
☒	All draft and final reports shall be signed and stamped by a professional Engineer registered in Ontario	Signed and stamped

Appendix H – Drawings

Site Plan, 1 Page

Existing Conditions and Removals Plan, C000

Notes and Legend Sheet, C001

Site Servicing Plan, C100

Site Grading Plan, C200

Erosion and Sediment Control Plan, C300

Post-Development Catchments Plan, C400

Sanitary Drainage Area Plan

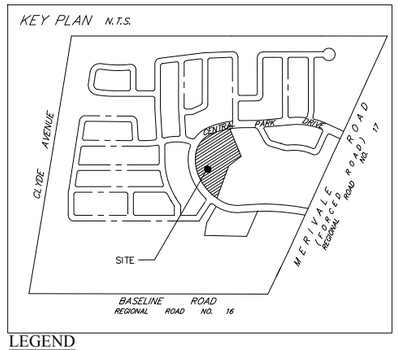

LEGEND

- BUILDING EXIT
- WALL LIGHT FIXTURE
- LIGHT FIXTURE
- L.P. LAMP POST
- F.F. FINISHED GROUND FLOOR
- F.H. FIRE HYDRANT
- BUS BUS STOP
- CB CATCH BASIN
- R=00.00 TOP OF ROCK
- 00.00 X FINISHED GRADE
- LOADING 3.6mx 7.0m MIN. LOADING SPACE
- D.C. DROPPED CURB
- AMENITY AREA
- PROPOSED SEVERANCE LINE
- EXISTING PROPERTY LINE
- 110 MUNICIPAL ADDRESS
- 25D PARKING SPACE 25 ASSIGNED TO BLDG D
- V VISITOR PARKING SPACE
- S STAFF PARKING SPACE

BUILDING IDENTIFICATION

BUILDING		SUITES	GRADE
A	EXISTING FIVE (5) STOREY (15m HIGH) RETIREMENT BLDG. (110 CENTRAL PARK DRIVE)	– 103 ROOMING UNITS	– F.F. = 99.21
B	PROPOSED TEN (10) STOREY (30.5m HIGH) RESIDENTIAL CARE FACILITY (130 CENTRAL PARK DRIVE)	– 190 ROOMING UNITS	– F.F. = 100.1
C	PROPOSED EIGHT (8) STOREY (25m HIGH) RESIDENTIAL CARE FACILITY (136 CENTRAL PARK DRIVE)	– 154 ROOMING UNITS	– F.F. = 100.1
D	EXISTING SIX (6) STOREY (17.85m HIGH) RETIREMENT APARTMENT BLDG. (120 CENTRAL PARK DRIVE)	– 14 ROOMING UNITS – 85 DWELLING UNITS 461 ROOMING UNITS TOTAL 85 DWELLING UNITS TOTAL 546 TOTAL RESIDENTIAL UNITS	– F.F. = 99.30

PARKING REQUIRED

5 STOREY RETIREMENT BLDG A – EXISTING
- – HEALTH SERVICE AREA = 900 SQ.FT. = 1 SPACE REQ'D
- – 103 ROOMING UNITS @ 1/4 UNITS = 26 SPACES REQ'D

VISITORS PARKING : 0 DWELLING UNITS = 0 VISITORS SPACES REQ'D

10 STOREY RESIDENTIAL CARE FACILITY BLDG B
- – 190 ROOMING UNITS UNITS @ 0.25 SPACES / UNIT = 47.5 SPACES REQ'D

VISITORS PARKING : 0 DWELLING UNITS = 0 VISITORS SPACES REQ'D

8 STOREY RESIDENTIAL CARE FACILITY BLDG C
- – 154 ROOMING UNITS UNITS @ 0.25 SPACES / UNIT = 38.5 SPACES REQ'D

VISITORS PARKING : 0 DWELLING UNITS = 0 VISITORS SPACES REQ'D

6 STOREY RETIREMENT BLDG D
- – HEALTH SERVICE AREA = 0 SQ.FT. = 1 SPACES REQ'D
- – 14 ROOMING UNITS @ 0.25 SPACES/ UNIT = 3.5 SPACES REQ'D
- – 85 DWELLING UNITS @ 0.7 SPACES/ UNIT = 59.5 SPACES REQ'D

VISITORS PARKING : (85 D/U –12) x 0.17 = 13 VISITORS SPACES REQ'D
- TOTAL HEALTH SERVICES SPACES REQUIRED = 2 SPACES
- TOTAL VISITOR SPACES REQUIRED = 13 SPACES

TOTAL OVERALL PARKING SPACES REQUIRED = 191 SPACES

PARKING PROVIDED

5 STOREY RETIREMENT BLDG A
- –TOTAL 27 SPACES PROVIDED ABOVE GROUND

10 STOREY APARTMENT BLDG B
- –17 SPACES PROVIDED ABOVE GROUND
- –97 SPACES PROVIDED UNDER GROUND
- –TOTAL 114 SPACES PROVIDED.

8 STOREY APARTMENT BLDG C
- –11 SPACES PROVIDED ABOVE GROUND
- –74 SPACES PROVIDED UNDER GROUND
- –TOTAL 97 SPACES PROVIDED.

6 STOREY RETIREMENT BLDG D
- –6 SPACES PROVIDED UNDERGROUND
- –77 SPACES PROVIDED ABOVE GROUND
- –TOTAL 83 SPACES PROVIDED.

HEALTH SERVICES/ STAFF PARKING PROVIDED FOR SITE = 7 SPACES

VISITORS PARKING FOR SITE: 35 VISITOR SPACES ABOVE GROUND

TOTAL PARKING PROVIDED

ABOVE GROUND/ SURFACE = 132 SPACES

UNDERGROUND PARKING STRUCTURES:
BDLG D BASEMENT = 6 SPACES
EXISTING STRUCTURE = 16 SPACES
PROPOSED U/G STRUCTURE = 167 SPACES

TOTAL SPACES PROVIDED = 321 SPACES

BICYCLE PARKING

BUILDING 'B'
0.25 SPACES PER ROOMING UNIT = 48.25 SPACES REQUIRED

BUILDING 'C'
0.25 SPACES PER ROOMING UNIT = 38.5 SPACES REQUIRED
87 BIKE PARKING SPACES REQUIRED

90 SPACES PROVIDED IN BASEMENT BICYCLE PARKING ROOMS.
0 SPACES PROVIDED AT GRADE.
51 SPACES ARE 1.8m x 0.6m x 1.9m HIGH
39 SPACES ARE 1.5m x 0.5m x 1.9m HIGH
TOTAL 90 BIKE PARKING SPACES PROVIDED.

5 15 30 50 100m
0 10 20 40 75

SITE INFORMATION - BLDG'S B&C

RSX ZONE - PERMITTED USE - RESIDENTIAL CARE FACILITY.
AMENITY AREA REQUIRED FOR RESIDENTIAL CARE FACILITY = 6m2 PER ROOMING UNIT, ALL REQUIRED MUST BE COMMUNAL AREA.
RESIDENTIAL UNITS - APARTMENT MID-RISE, APARTMENT HIGH RISE.
AVERAGE FINISHED GRADES: BLDG "B" = 100.31m, BLDG "C" = 99.85
TOP OF FLAT ROOF OF TOWER "B" ELEVATION = 132.00m, TOP OF FLAT ROOF OF TOWER "C" ELEVATION = 126.10m

ZONING INFORMATION

SITE ZONING: RSX [932] H(28) SCHEDULE 1: AREA "B", SCHEDULE 2: AREA "Y"

REGULATIONS	REQ'D	PROVIDED
LOT AREA MINIMUM	540 m2 MIN.	9809m2 (22,402m2 TOTAL FOR RETIREMENT SITE BLDG'S A,B,C, & D.)
LOT FRONTAGE MINIMUM	18 m MIN.	152 m
FRONT YARD SETBACK	4.5m MIN.	4.5 m (BASEMENT EXIT), 4.89m (BLDG 'C'), 23.56m (BLDG 'B')
SIDEYARD SETBACK - ABUTTING A PARK	1.2m MIN.	11m
SIDEYARD SETBACK - ABUTTING A STREET	2.4m MIN.	N/A
SETBACK - ALL OTHER CASES	0.3m MIN.	N/A
REAR YARD MINIMUM DEPTH - CORNER	3m MIN.	10.55m
REAR YARD MINIMUM DEPTH - ALL OTHER CASES	6m MIN.	N/A
MINIMUM DRIVEWAY WIDTH	2.6m MIN.	MIN. WIDTH 6.7m - MAX. WIDTH = 9.0m
LANDSCAPED OPEN SPACE MINIMUM	30% MIN.	41.3%
HEIGHT MAXIMUM	28m	BLDG 'B' = 31.69m, BLDG 'C' =26.25m
AMENITY AREA - RESIDENTIAL CARE FACILITY (NOTE: AMENITIES ARE SHARED WITH BLDGS A & D, AREAS ARE CALCULATED FOR BLDG B & C ONLY)	6m2 PER ROOMING UNIT 344 X 6 = 2064m2 REQ'D.	872m2 BASEMENT, 2440m2 GROUND FLOOR TOTAL = 3312m2 ALL AMENITY AREA NOTED IS COMMUNAL PRIVATE SUITE BALCONIES ARE NOT INCLUDED IN AMENITY CALCULATIONS
DENSITY MAXIMUM	____	350 UNITS PER HECTARE

NOTE: THIS PLAN IS TO READ IN CONJUNCTION WITH SITE SERVICES, UTILITY & GRADING PLANS PREPARED BY EXP (OTTAWA), LANDSCAPE PLAN BY J. WHEELER LANDSCAPE ARCHITECT, SURVEY 4R–21512, PART OF BLOCK 69, REGISTERED PLAN 4M–1047 PREPARED BY PAUL A. RIDDELL O.L.S. 2006

M. David Blakely Architect Inc.
2200 Prince of Wales Dr. - Suite 101
Ottawa, Ontario K2E 6Z9
Phone (613) 226-8811 Fax (613) 226-7942

GENERAL NOTES:

1. THIS DRAWING SHALL NOT BE USED FOR PERMIT OR CONSTRUCTION UNLESS THE DRAWING BEARS THE ARCHITECT'S SEAL AND SIGNATURE.

CONSTRUCTION NORTH

No.	DATE	DESCRIPTION	INIT
4.	26/03/20	UPDATE UNIT INFORMATION	KB
3.	19/03/20	ADD GAS METER & FIRE DEPT. CONNECTIONS	KB
2.	18/03/20	FOR REVIEW	KB
1.	17/01/20	FOR REVIEW	KB

REVISIONS

SEAL.

A - DETAIL NUMBER
B - SHEET NUMBER (DETAIL REQUIRED)
C - SHEET NUMBER (DETAIL LOCATION)

PROJECT
ASTORIA
PROPOSED 10 STOREY APARTMENT BUILDING 'B'
PROPOSED 8 STOREY APARTMENT BUILDING 'C'
130 & 136 CENTRAL PARK DRIVE OTTAWA ONTARIO

CLIENT
ASHCROFT HOMES

DRAWING TITLE
SITE PLAN

DATE	SCALE	SHEET No.
JANUARY 2020	1 : 500	SP-1
DRAWN BY: KFWB	CHECKED MDB	