- **Ms. Siffan Rahman**

Geotechnical Investigation

Type of Document:
Final

Project Name:
Proposed Multi- Use Development
185 Preston Street
Ottawa, Ontario

Project Number:
OTT-00257522-A0

Prepared By: Susan M. Potyondy, P.Eng.

Reviewed By: Ismail M. Taki, M.Eng., P.Eng.

EXP Services Inc.
100-2650 Queensview Drive
Ottawa, ON K2B 8H6
Canada

Date Submitted
March 5, 2020

Ms. Siffan Rahman

404-655 Beauparc Private
Ottawa, Ontario
K1J 0B6

Geotechnical Investigation

Type of Document:
Final

Project Name:
Proposed Multi-Use Development
185 Preston Street
Ottawa, Ontario

Project Number:
OTT-00257522-A0

Prepared By:
EXP Services Inc.
100-2650 Queensview Drive
Ottawa, ON K2B 8H6
Canada
T: 613-688-1899
F: 613-225-7337
www.exp.com

LICENSED PROFESSIONAL ENGINEER
MARCH 5, 2020
S.M. POTYONDY
37232568
PROVINCE OF ONTARIO

Susan M. Potyondy, P.Eng.
Senior Project Manager, Geotechnical Services
Earth and Environment

Ismail M. Taki, M.Eng., P.Eng.
Manager, Geotechnical Services
Earth and Environment

Date Submitted:
March 5, 2020

Legal Notification

This report was prepared by EXP Services Inc. for the account of **Ms. Siffan Rahman.**

Any use which a third party makes of this report, or any reliance on or decisions to be made based on it, are the responsibility of such third parties. EXP Services Inc. accepts no responsibility for damages, if any, suffered by any third party as a result of decisions made or actions based on this project.

Executive Summary

EXP Services Inc. (EXP) is pleased to present the results of the geotechnical investigation completed for the proposed multi-use development to be located at 185 Preston Street, Ottawa, Ontario. Authorization to proceed with this geotechnical investigation was provided by Ms. Siffan Rahman in our signed work authorization form dated November 26, 2019.

This geotechnical investigation was undertaken concurrently with Phase One and Two Environmental Site Assessments (ESAs) conducted by EXP with the results reported under separate covers.

Based on the available design information, the proposed multi-use development includes a 4-storey building with basement that will be occupied by commercial and residential spaces. Based on the grading plan (Sheet No. G-1) dated December 17, 2019, (Revision No. 3) and prepared by W. Elias and Associates Consulting Engineers, the building footprint will measure approximately 5.0 m by 20.0 m. The design elevation of the ground floor will be Elevation 57.52 m. The basement floor will be at Elevation 54.47 m. If any changes are made to the design, this office must be contacted to review our recommendations and update the geotechnical report, if required.

The fieldwork for the geotechnical investigation was undertaken on December 18, 2019 and January 24, 2020 and consists of three (3) boreholes (Borehole Nos. 1 to 3). The borehole fieldwork was supervised on a full-time basis by EXP. Borehole Nos. 1 and 3 were located exterior to the buildings on site and extended to depths of 8.4 m to 11.4 m whereas Borehole No. 2 was drilled in the basement of one (1) of the buildings to a 4.3 m depth.

The investigation revealed the subsurface conditions at the site to consist of fill underlain by loose to compact sand to silty sand and compact glacial till followed by limestone bedrock contacted at 10.2 m depth (Elevation 48.0 m). Groundwater levels were established at 4.0 m and 5.4 m depths (Elevation 52.8 m).

The proposed building with basement elevation at Elevation 54.47 m is expected to be founded on the loose sand contacted between 4.5 m and 8.8 m depths below existing grade and is expected to be above the groundwater table.

A liquefaction analysis undertaken at the site revealed that the sand below the groundwater table is susceptible to liquefaction during a seismic event with a post-liquefaction settlement of up to 170 mm. Therefore, in view of the high post-settlement, founding the proposed building on conventional strip or spread footing or on a mat foundation is not considered feasible. Soil densification was also contemplated but is not considered feasible due to proximity of the site to surrounding building structures that are likely founded on strip and spread footings.

Based on the results of the liquefaction analysis, the proposed building may be supported by closed end concrete filled steel pipe piles driven to the bedrock or by cased micro-piles set in the bedrock. The basement floor slab will have to be designed as a structural slab supported by the driven piles or micro-piles. The design of the driven piles and micro-piles will have to take into consideration the liquefiable soil.

The 2012 Ontario Building Code (OBC) indicates that for soil that is susceptible to liquefaction, the site classification for seismic site response would be Class F. However, for a fundamental period of vibration of less than 0.5 seconds for the site, the 2012 OBC permits that the site class and the corresponding acceleration and velocity-based site coefficients, F_a and F_V, may be determined by assuming the soils are not liquefiable. In this case, the site classification was determined to be Class C.

Since the subsurface soils consist of cohesionless sandy soils that are not susceptible to consolidation settlement, there is no restriction to raising the grades at the site from a consolidation settlement perspective.

The basement floor slab of the proposed building will have to be designed as a structural slab supported by the driven piles or micro-piles. The slab-on-grade should be set on a bed of well packed 19 mm clear stone at least 200 mm thick placed on an engineered fill pad at least 300 mm thick and compacted to 98 percent of the standard Proctor maximum dry density (SPMDD). The engineered fill pad should be placed on the native sand. The clear stone will prevent the capillary rise of moisture from the underlying soil to the floor slab. Adequate saw cuts should be provided in the floor slab to control cracking. As a precautionary measure, underfloor drains should be installed beneath the floor slab.

The subsurface basement walls of the building should be backfilled with free draining material, such as Ontario Provincial Standard Specification (OPSS) 1010 Granular B Type II and equipped with a perimeter drainage system to prevent the buildup of hydrostatic pressure behind the walls. The walls will be subjected to lateral static and dynamic (seismic) earth forces.

All excavations must be undertaken in accordance with the Occupational Health and Safety Act (OHSA), Ontario Reg. 213/91. Based on the definitions provided in OHSA, the subsurface soils on site are considered to be Type 3 and as such must be cut back at 1H:1V from the bottom of the excavation above the groundwater level. Within zones of persistent seepage and below the groundwater level in the soils, the excavation side slopes are expected to slough and eventually stabilize at a slope of 2H:1V to 3H:1V. It is assumed that the base of the proposed new building will match the foundation level of the existing surrounding buildings. If space restrictions on site cannot accommodate the required gradient of the excavation side slopes, a shoring system may be required and should be designed in accordance with OHSA and the 2006 Canadian Foundation Engineering Manual (CFEM) by a professional engineer specializing in shoring design.

Seepage of groundwater into the excavation should be anticipated but may be removed by collecting the water at low points within the excavation and pumping from sumps. In areas of high infiltration, a higher seepage rate should be anticipated and the need for high capacity pumps to keep the excavation dry should not be ignored.

It is anticipated that the majority of fill required for construction will have to be imported to the site and should conform to the Ontario Provincial Standard Specification (OPSS) requirements for Granular A, B Type II and Select Subgrade Material (SSM).

The above and other related considerations are discussed in greater detail in the main body of this report.

Table of Contents

Page

List of Tables

Page

List of Figures

List of Appendices

1 Introduction

EXP Services Inc. (EXP) is pleased to present the results of the geotechnical investigation completed for the proposed multi-use development to be located at 185 Preston Street, Ottawa, Ontario. Authorization to proceed with this geotechnical investigation was provided by Ms. Siffan Rahman in our signed work authorization form dated November 26, 2019.

This geotechnical investigation was undertaken concurrently with Phase One and Two Environmental Site Assessments (ESAs) conducted by EXP with the results reported under separate covers.

Based on the available design information, the proposed multi-use development includes a 4-storey building with basement that will be occupied by commercial and residential spaces. Based on the grading plan (Sheet No. G-1) dated December 17, 2019, (Revision No. 3) and prepared by W. Elias and Associates Consulting Engineers, the building footprint will measure approximately 5.0 m by 20.0 m. The design elevation of the ground floor will be Elevation 57.52 m. The basement floor will be at Elevation 54.47 m. If any changes are made to the design, this office must be contacted to review our recommendations and update the geotechnical report, if required.

This geotechnical investigation was undertaken to:

a) Establish the subsurface soil and groundwater conditions at three (3) borehole located at the site;

b) Classify the site for seismic site response in accordance with the requirements of the 2012 Ontario Building Code (OBC) and assess the potential for liquefaction of the subsurface soils during a seismic event;

c) Comment on grade-raise restrictions;

d) Make recommendations regarding the most suitable type of foundations, founding depth and bearing pressure at serviceability limit state (SLS) and factored geotechnical resistance at ultimate limit state (ULS) of the founding strata and comment on the anticipated total and differential settlements of the recommended foundation type;

e) Discuss the feasibility of constructing the lowest floor slab as a slab on grade and provide comments regarding perimeter and underfloor drainage systems;

f) Provide lateral earth pressure parameters (for static and seismic conditions) for the subsurface foundation walls of the proposed building;

g) Comment on excavation conditions and de-watering requirements during construction;

h) Provide comments regarding pipe bedding requirements;

i) Discuss backfilling requirements and suitability of on-site soils for backfilling purposes;

j) Provide a pavement structure for the outdoor surface parking lot; and

k) Comment on the corrosion potential of the subsurface soils to buried concrete and structures/members.

The comments and recommendations given in this report are based on the assumption that the above-described design concept will proceed into construction. If changes are made either in the design phase or during construction, this office must be retained to review these modifications. The result of this review may be a modification of our recommendations or it may require additional field or laboratory work to check whether the changes are acceptable from a geotechnical viewpoint.

2 Site Description

The site is located on the east side of Preston Street in the block between Poplar Street and Willow Street in Ottawa, ON. The subject property (site) is rectangular in shape and approximately 0.022 hectares in size. The property is currently occupied by a two-storey residential building (with a basement) in the front of the property and a shed of concrete block type construction at the back of the property. The neighboring properties on the north and south sides of the property are occupied by buildings. The location of the site is shown on the Site Location Plan, Figure 1.

Based on the ground surface elevation of Elevation 58.2 m at the locations of Borehole Nos.1 and 3, the topography of the site is relatively flat.

3 Geology of Site

3.1 Surficial Geology

The surficial geology map (Map 1506A – Surficial Geology, Ontario-Quebec, Geological Survey of Canada, printed by the Surveys and Mapping Branch, 1982) indicates the site is underlain by glacial till.

3.2 Bedrock Geology

The bedrock geology map (Map 1508A – Generalized Bedrock Geology, Ottawa-Hull, Ontario and Quebec, Geological Survey of Canada, printed by the Surveys and Mapping Branch, 1979) indicates the site is underlain by limestone bedrock of the Eastview formation.

4 Procedure

The fieldwork for the geotechnical investigation was undertaken on December 18, 2019 and January 24, 2020 and consists of three (3) boreholes (Borehole Nos. 1 to 3). Borehole No. 1 was located outside between the existing residential building and the shed and advanced to a cone refusal depth of 8.4 m below existing grade. Borehole No. 2 was located inside the existing residential building in the basement and advanced to a termination depth of 4.3 m below the basement floor slab. Borehole No.3 was located on the southeast side of the shed and extends to a termination depth of 11.4 m. The borehole fieldwork was supervised on a full-time basis by EXP. The borehole locations are shown on the borehole location plan, Figure 2.

The borehole locations and geodetic elevations were established in the field by a representative from EXP. The borehole locations were cleared from any underground services by USL-1 cable locators, prior to drilling the boreholes.

The boreholes were drilled with a portable type drill and a mini-rubber track mounted drill rig equipped with soil sampling and rock coring capabilities. Standard penetration tests (SPTs) were performed in all the boreholes on a continuous basis to a 1.3 m depth interval. The soil samples were retrieved by the split-barrel sampler, in accordance with the American Society for Testing and Materials (ASTM). In Borehole No. 2, the SPTs were undertaken using one-half of the weight of the standard hammer weight. The 'N' values from the one-half weight hammer weight were corrected to the SPT standard 'N' value by dividing the measured 'N' value by two. The corrected 'N' values are shown in the attached borehole logs (Figures 3 to 5). Dynamic cone penetration test (DCPT) was undertaken in Borehole No. 1 from 5.8 m to cone refusal at an 8.4 m depth. Borehole No. 3 was advanced to a 4.6 m depth by power augering technique followed by sampling to a 10.2 m depth. The bedrock was cored in Borehole No. 3 using a NQ size core barrel from 10.2 m to the termination depth of 11.4 m below existing grade. A careful record of any sudden drops of the casing and core barrel, color of wash water and wash water return was kept during rock coring operations.

Borehole No. 1 was equipped with a 32 mm diameter PVC monitoring well (with screened section) and Borehole No. 2 was equipped with a 19 mm diameter standpipe (with slotted section), for long-term monitoring of the groundwater levels. The installation configuration of the monitoring well and standpipe is documented on the respective borehole log. All boreholes were backfilled upon completion of drilling operations.

4.1 Laboratory Testing Program

All soil samples were visually examined in the field for textural classification, logged, preserved in plastic bags and identified accordingly. The rock core was visually examined, placed in the core box, identified and logged.

On completion of the fieldwork, all the soil samples and the rock core were transported to the EXP laboratory located in the City of Ottawa.

The soil samples were visually examined in the laboratory by a senior geotechnical engineer. The soil samples were classified in accordance with the Unified Soil Classification System (USCS).

A summary of the soil sample laboratory testing program is shown in Table I. The laboratory testing program for selected soil samples was undertaken in accordance with American Society for Testing and Materials (ASTM). The testing procedures for the corrosion analysis are referenced in Appendix A.

Table I: Summary of Laboratory Testing Program

Type of Test	Number of Tests Completed
Moisture Content Determination	19
Grain Size Analysis	6
Corrosion Analysis (pH, sulphate, chloride and resistivity)	1

5 Subsurface Conditions and Groundwater Levels

A detailed description of the subsurface conditions and groundwater levels from the boreholes are given on the attached Borehole Logs, Figure Nos. 3 to 5 inclusive. The borehole logs and related information depict subsurface conditions only at the specific locations and times indicated. Subsurface conditions and water levels at other locations may differ from conditions at the locations where sampling was conducted. The passage of time also may result in changes in the conditions interpreted to exist at the locations where sampling was conducted.

Boreholes were drilled to provide representation of subsurface conditions as part of a geotechnical exploration program and are not intended to provide evidence of potential environmental conditions.

It should be noted that the soil boundaries indicated on the borehole logs are inferred from non-continuous sampling and observations during drilling operations. These boundaries are intended to reflect approximate transition zones for the purpose of geotechnical design and should not be interpreted as exact planes of geological change. The “Note on Sample Descriptions” preceding the borehole logs form an integral part of this report and should be read in conjunction with this report.

A review of the borehole logs indicates the following subsurface conditions with depth and groundwater level measurements.

5.1 Concrete

A concrete pad was contacted at ground surface in Borehole No. 1 and is approximately 100 mm thick and appears to be reinforced with a 20 mm diameter steel reinforcing bar. The concrete is underlain by 600 mm thick granular fill base with a moisture content of 13 percent. Borehole No. 2 located in the basement of the existing residential building indicates the basement floor slab is approximately 80 mm thick and is underlain by an approximate 180 mm thick granular fill base.

5.2 Fill

The granular fill base in Borehole No. 1 is underlain by fill to a 1.5 m depth below existing grade (Elevation 56.7 m). The fill consists of cobbles and boulders. The borehole was advanced through the cobbles and boulders by rock coring method.

5.3 Glacial Till

The fill in Borehole No. 1 is underlain by glacial till that extends to a 2.1 m depth below existing grade (Elevation 56.1 m). Based on the SPT N-value of 15, the glacial till is in a compact state. The glacial till consists of silty sand with gravel, cobbles and boulders. The natural moisture content of the glacial till is 13 percent.

5.4 Sand to Silty Sand

Sand to silty sand was encountered beneath the fill and glacial till in Borehole Nos. 1 and 2. Sand was also encountered in Borehole No. 3 and extends to an 8.8 m depth (Elevation 49.4 m).

The SPT N values of the sand to silty sand are 4 to 23 indicating the sand to silty sand is in a loose to compact state. The natural moisture content of the sand to silty sand is 8 percent to 23 percent.

Grain size analysis of five (5) samples of the soil were conducted and the results are summarized in Table II. The grain size distribution curves are shown in Figures 6 to 10.

Table II: Summary of Results from Grain-size Analysis – Sand to Silty Sand Samples

Borehole No. - Sample No.	Depth (m)	Grain-size Analysis (%)			Soil Classification (USCS)
		Gravel	Sand	Fines (Silt and Clay)	
BH1-SS6	3.3-3.9	0	96	4	Poorly Graded Sand (SP)
BH1-SS9	5.2-5.8	2	94	4	Poorly Graded Sand (SP)
BH2-SS1	0.3-0.9	13	53	34	Silty Sand (SM)
BH3-SS3	6.1-6.7	0	98	2	Poorly Graded Sand (SP)
BH3-SS5	7.6-8.2	0	99	1	Poorly Graded Sand (SP)

Based on a review of the results from the grain size analysis, the soil may be classified as a poorly graded sand (SP) to a silty sand (SM) in accordance with the USCS.

5.5 Glacial Till

Glacial till was contacted below the sand in Borehole No. 3 at 8.8 m depth (Elevation 49.4 m) and extends to a 10.2 m depth (Elevation 48.0 m). The glacial till contains gravel, cobbles and boulders. Based on SPT N-values of 23, the glacial till is in a compact state. The natural moisture content of the glacial till is 10 percent.

Grain size analysis was conducted on one (1) sample of the glacial till and the results are summarized in Table III. The grain size distribution curves are shown in Figure 11.

Table III: Summary of Results from Grain-size Analysis – Glacial Till Sample					
Borehole No. - Sample No.	Depth (m)	Grain-size Analysis (%)			Soil Classification (USCS)
		Gravel	Sand	Fines (Silt and Clay)	
BH3-SS8	9.4-10.0	15	69	16	Silty Sand with Gravel (SM)

Based on a review of the results from the grain size analysis, the glacial till may be classified as a silty sand with gravel (SM) in accordance with the USCS. The glacial till contains cobbles and boulders.

5.6 Limestone Bedrock

The dynamic cone penetration test (DCPT) conducted in Borehole No. 1 indicates that cone refusal was met at an 8.4 m depth below existing grade on inferred bedrock or boulders.

Limestone bedrock was contacted in Borehole No. 3 beneath the glacial till at a 10.2 m depth (Elevation 48.0 m). A 1.2 length of the bedrock was cored to a termination depth of 11.4 m (Elevation 46.8 m). Total Core Recovery (TCR) and Rock Quality Designation (RQD) values are 100 percent and 52 percent respectively. The RQD value indicates the bedrock has a fair quality.

5.7 Groundwater Level Measurements

A summary of a set of groundwater level measurements taken on January 8, 2020 in the monitoring well and standpipe installed in Borehole Nos.1 and 2 is shown in Table IV.

Table IV: Summary of Groundwater Level Measurements			
Borehole No. (BH)	Approximate Ground Surface Elevation (m)	Date of Measurement (elapsed time in days from date of installation)	Groundwater Depth Below Ground Surface (Elevation), m
BH 1	58.2 (ground surface)	January 8, 2020 (21 days)	5.4 (52.8)
BH 2	56.8 (basement slab)	January 8, 2020 (21 days)	4.0 (52.8)

Water levels were determined in the boreholes at the times and under the conditions stated in the scope of services. Note that fluctuations in the level of groundwater may occur due to a seasonal variation such as precipitation, snowmelt, rainfall activities, and other factors not evident at the time of measurement and therefore may be at a higher level during wet weather periods.

6 Liquefaction Potential of Soils and Site Classification for Seismic Site Response

6.1 Liquefaction Potential of Soils

Below the proposed design basement floor elevation of Elevation 54.47 m, loose sand was encountered in the boreholes between 4.5 m and 8.8 m depths below existing grade. The majority of this sand is below the groundwater table. Liquefaction analysis undertaken at the site revealed the sand to be susceptible to liquefaction during a seismic event with a post-liquefaction settlement of 170 mm.

Therefore, due to the high post-settlement, founding the proposed building on a mat foundation or by strip and spread footings on the sand is not considered feasible. Soil densification was also contemplated but is not considered feasible due to proximity of the site to surrounding building structures that are likely founded on strip and spread footings.

Therefore, the proposed building may be supported by closed end concrete filled steel pipe piles driven to the bedrock or by cased micro-piles set in the bedrock. The design of the driven piles and micro-piles will have to take into consideration the liquefiable soil.

6.2 Site Classification for Seismic Site Response

The 2012 Ontario Building Code indicates that for soil that is susceptible to liquefaction, the site classification for seismic site response would be Class F. However, for a fundamental period of vibration of less than 0.5 seconds for the site, the 2012 OBC indicates the site class and the corresponding acceleration and velocity-based site coefficients, F_a and F_v may be determined by assuming the soils are not liquefiable. In this case, the site classification was determined to be Class C.

For the site, the 2015 National Building Code Seismic Hazard Calculation shown in Appendix B indicates that for the site the following spectral accelerations for 2 percent probability of exceedance in 50 years (0.000404 probability of exceedance per annum) for Site Class C; Sa(0.2)=0.437g, Sa(0.5)=0.236g, Sa(1.0)=0.118g, Sa(2.0)=0.056g and the reference peak ground acceleration (PGA) is 0.280g (g=acceleration due to gravity = 9.81 m/s^2).

From the 2012 OBC, the respective Fa and Fv values for the Site Class C are 1.0. Therefore, the spectral accelerations noted above may be used for this site for a fundamental period of vibration equal to or less than 0.5.

If the fundamental period of vibration for the structures is greater than 0. 5 seconds, this office should be contacted to provide revised parameters for seismic design.

7 Grade Raise Restrictions

Since the subsurface soils consist of cohesionless sandy soils that are not susceptible to consolidation settlement, there is no restriction to raising the grades at the site from a consolidation settlement perspective.

Based on the proposed development and setting of the site, significant grade raise is not expected at the site.

8 Foundation Considerations

As indicated in Section 6 of this report, the loose sand is liquefiable and will result in significant settlement of 170 mm following a seismic event. Due to the high liquefaction settlement, it is not considered feasible to support the proposed building on a mat foundation or by strip and spread footings founded on the sand. Therefore, it is recommended that the proposed building be supported by closed end concrete filled steel pipe piles driven to the bedrock or by cased micro-piles set in the bedrock. The basement floor slab will have to be designed as a structural slab supported by the driven piles or micro-piles.

Since the site is located in a high density area with existing buildings very close to the site, micro-piles may be the preferred foundation since micro-piles are typically drilled into the ground and will generate less vibration during installation compared with the pipe piles that are driven into the ground.

It is recommended that for driven piles and micro-piles, vibration monitoring be conducted on site and at adjacent existing buildings and infrastructure during the installation of the foundations.

The two (2) foundation options are discussed in the following sections of this report.

8.1 Impact of Liquefiable Soils on Driven Pile and Micro-Pile Design

The seismic response of piles in liquefiable soil occurs in two (2) phases and are considered applicable for this site. Firstly, a cyclic phase during the ground shaking and development of liquefaction and secondly, lateral spreading following liquefaction. The soil-pile interaction in the cyclic phase is characterized by dynamic loads on the pile from both ground movements and inertial loads form the superstructure. In addition, the loose sand between 4.5 m and 8.8 m will liquefy and will not provide any lateral support to the pile.

The combination of these loads will govern the critical load for the integrity of the piles during ground shaking. The piling contractor's design engineer should confirm that the piles would perform satisfactorily under the above loading conditions. The pile design should be submitted to EXP for review.

Soil liquefaction may impart down-drag loads on the pile. The down-drag load that the pile will be subjected to due to subsequent consolidation of the loose sand have been computed for the two (2) different pile sizes for the driven pipe piles. For the micro-pile option, the designer of the micro-piles will have to assess the down-drag in the design of the micro-pile.

The second phase is the lateral spreading of the soil following liquefaction. It is characterized by large bending moment and lateral load and deflection of the pile which will have to be taken into consideration in the design of driven piles and the micro-piles. Reference is made in *Section 4.1.8.16 Foundation Provisions* of the 2012 OBC regarding measures that should be considered in the design of the driven piles and micro-piles in liquefiable soils.

8.2 Driven Pipe Piles

The geotechnical conditions at the site are suitable for supporting the proposed structure by concrete filled closed end steel pipe piles driven to practical refusal on the limestone bedrock contacted in Borehole No. 3 at a 10.2 m depth (Elevation 48.0 m). The depth at which the piles will meet practical refusal on the limestone bedrock may vary at locations away from Borehole No. 3. Since the piles are expected to meet refusal in the bedrock, the factored geotechnical resistance at ULS will govern the design. The factored geotechnical resistance (axial capacity) at ULS includes a resistance factor of 0.40. The factored geotechnical resistance at ULS has been given on Table V. The factored geotechnical resistance at ULS was based on steel piles with a yield strength of 350 MPa and concrete compressive strength of 35 MPa. The calculated down-drag load created by soil liquefaction as discussed previously is also shown in Table V. The estimated load carrying capacity of the pile is determined by deducting the down-drag load from the factored geotechnical resistance at ULS as shown in Table V.

Table V: Factored Geotechnical Resistance at Ultimate Limit State (ULS) and Estimated Down-Drag Load

Description	Factored Geotechnical Resistance at ULS (kN)	Estimated Negative Skin Friction (kN)	Estimated Load Carrying Capacity of Pile (kN)
178 mm O.D. (outside diameter) by 12 mm wall thickness	957	165	792
245 mm O.D. by 12 mm wall thickness	1445	227	1218

The estimated unfactored lateral load in ULS on the piles due to liquefaction of the soil is 44 kN for the 178mm O.D. pile and 115 kN for the 245 mm O.D. pile.

Settlements induced by the above recommended pile loads are expected to be less than normally tolerated limits of 25 mm total and 19 mm differential movements.

To achieve the capacity given previously, the pile driving hammer must seat the pile into bedrock without overstressing the pile material. For guidance purposes, it is estimated that a hammer with rated energy of 54 kJ to 70 kJ (40,000 ft. lbs. to 52,000 ft. lbs.) per blow would be required to drive the piles to practical refusal in the bedrock. Practical refusal is considered to have been achieved at a set of 5 blows for 6 mm or less of pile penetration. However, the driving criteria for a particular hammer-pile system must be established at the beginning of the project. This may be achieved with a Pile Driving Analyzer.

The till is expected to contain cobbles and boulders. It is therefore recommended that the pile tips should be reinforced with a 25-mm thick steel plate and equipped with a driving shoe in accordance with Ontario Provincial Standard Drawing (OPSD) 3001.100, Type II, dated November 2010 and shown in Appendix C.

Piles driven at the site may be subject to relaxation, i.e. loss of load carrying capacity with time. Therefore, it is recommended that the piles should be re-struck, minimum of 24 hours after initial driving to determine if the piles have relaxed. If relaxation is observed, this procedure should be repeated every 24 hours until it can be proven that relaxation is no longer a problem.

The installation of the piles at the site should be monitored on a full-time basis by a geotechnician working under the direction and supervision of a qualified geotechnical engineer to verify that the piles are driven in accordance with the project specifications. It is recommended that vibration monitoring be conducted at the site and at adjacent existing buildings and infrastructure during the installation of the piles.

The recommended factored geotechnical resistances at ULS have been calculated by EXP from the borehole information for the design stage only. The investigation and comments are necessarily on-going as new information of underground conditions becomes available. For example, more specific information is available with respect to conditions between boreholes, when foundation construction is underway. The interpretation between boreholes, and the recommendations of this report must therefore be checked through field monitoring provided by an experienced geotechnical engineer to validate the information for use during the construction stage.

8.3 Micro-Piles

It is considered that an alternative to driven piles is cased micro-piles. The micro-pile is cased in the overburden soil and the upper level of the limestone bedrock with the remainder of the micro pile advanced by drilling an uncased hole into the bedrock. Such a pile will carry the load in bond between the grout and the bedrock. The load carrying capacity of a cased micro-pile with the casing embedded in the upper level of the bedrock may be computed from the following expression:

$$P_{ult} = \pi \, \alpha_1 \, l_1 \, d_1$$

Where P_{ult} = Ultimate load carrying capacity of pile, kN.

α_1 = 1500 kPa ultimate bond between limestone bedrock and grout

l_1 = Height of pile socketed in bedrock, m

d_1 = Diameter of drilled hole in bedrock, m

In this case, the bond between the casing and the soil should be neglected.

The computed ultimate capacity of the piles should be multiplied by a geotechnical resistance factor of 0.40 when computing the ULS factored axial capacity of the piles.

The impact of liquefiable soils on the micro-piles will have to be assessed along with the down-drag forces and lateral load on the pile once the size of the micro-pile is known.

It is noted that the pile borings should be cased in the overburden to prevent cave-in of the granular soils and to reduce the groundwater seepage into the pile holes. It is imperative that the holes for installation of

the piles are cleaned properly so that the grout is in contact with the overburden soil and clean bedrock that is free of any soil smearing. All water should be pumped out from the pile boring prior to the placement of the grout.

It is noted from the subsurface investigation that the overburden contains numerous boulders and cobbles which the installation contractor should take into consideration when selecting the method of drilling of the micro-piles. Also, water inflow into the drilled micro-piles holes should be expected.

It is recommended that the pile capacity should be proven by performing pile load tests in accordance with the requirements of ATSM D1143/D1143M-07. If the piles will also be subjected to tension and lateral loads, the capability of the piles to support these loads should also be proven by performing appropriate pile load tests in accordance with the procedures specified in ASTM.

It is recommended that vibration monitoring be conducted at the site and at adjacent existing buildings and infrastructure during the installation of the driven pipe or micro-piles.

9 Floor Slab Construction and Drainage Requirements

The basement floor slab of the proposed building will have to be designed as a structural slab supported by the driven piles or micro-piles. The slab-on-grade should be set on a bed of well packed 19 mm clear stone at least 200 mm thick placed on an engineered fill pad at least 300 mm thick and compacted to 98 percent of the standard Proctor maximum dry density (SPMDD). The engineered fill pad should be placed on the native sand. The clear stone will prevent the capillary rise of moisture from the underlying soil to the floor slab. Adequate saw cuts should be provided in the floor slab to control cracking.

It is recommended that perimeter and as a precautionary measure underfloor drains should be provided for the proposed building. The underfloor drainage system may consist of 100 mm diameter perforated pipe or equivalent placed in parallel rows at 5 m to 6 m centres and at least 300 mm below the underside of the floor slab. The drains should be set on 100 mm of pea-gravel and covered on top and sides with 150 mm of pea-gravel and 300 mm of CSA Fine Concrete Aggregate. The CSA Fine Concrete Aggregate may be replaced by an approved porous geotextile membrane, such as Terrafix 270R or equivalent. The perimeter drains may also consist of 100 mm diameter perforated pipe set on the footings and surrounded with 150 mm of pea-gravel and 300 mm of CSA Concrete Aggregate. The perimeter and underfloor drains should be connected to separate sumps so that at least one system would be operational should the other fail.

The finished exterior grade should be sloped away from the building to prevent surface ponding close to the exterior walls.

10 Lateral Earth Pressures Against Subsurface Walls

The subsurface basement walls of the building should be backfilled with free draining material, such as Ontario Provincial Standard Specification (OPSS) 1010 Granular B Type II and equipped with a perimeter drainage system to prevent the buildup of hydrostatic pressure behind the walls. The walls will be subjected to lateral static and dynamic (seismic) earth forces. The expressions below assume free draining backfill material, a perimeter drainage system, level backfill surface behind the wall and vertical face on the back side of the wall.

For design purposes, the lateral static earth thrust against the subsurface walls may be computed from the following equation:

$$P = K_0 h (\tfrac{1}{2} \gamma h + q)$$

where P = lateral earth thrust acting on the subsurface wall; kN/m

K_0 = lateral earth pressure coefficient for 'at rest' condition for Granular B Type II backfill material = 0.50

γ = unit weight of free draining granular backfill; Granular B Type II = 22 kN/m^3

h = depth of point of interest below top of backfill, m

q = surcharge load stress, kPa

The lateral seismic thrust may be computed from the equation given below:

$$\Delta_{Pe} = \gamma H^2 \frac{a_h}{g} F_b$$

where Δ_{Pe} = dynamic thrust in kN/m of wall

H = height of wall, m

γ = unit weight of backfill material = 22 kN/m^3

$\frac{a_h}{g}$ = seismic coefficient = 0.32

F_b = thrust factor = 1.0

The dynamic thrust does not take into account the surcharge load. The resultant force acts approximately at 0.63H above the base of the wall.

All subsurface walls should be properly waterproofed.

11 Excavations and De-Watering Requirements

11.1 Excavations

Excavation for the proposed building is assumed to extend to a 3.0 m to 4.0 m depth below existing grade. The excavations are expected to extend through the fill, glacial till and into the sand to silty sand and are anticipated to be approximately 1.7 m above the groundwater level.

Excavation of the soils may be undertaken using heavy equipment through the fill, the upper glacial till layer and into the sand to silty sand.

All excavations must be undertaken in accordance with the Occupational Health and Safety Act (OHSA), Ontario Reg. 213/91. Based on the definitions provided in OHSA, the subsurface soils on site are considered to be Type 3 and as such must be cut back at 1H:1V from the bottom of the excavation above the groundwater level. Within zones of persistent seepage and below the groundwater level in the soils, the excavation side slopes are expected to slough and eventually stabilize at a slope of 2H:1V to 3H:1V. It is assumed that the base of the proposed new building will match the foundation level of the existing surrounding buildings. If space restrictions on site cannot accommodate the required gradient of the excavation side slopes, a shoring system may be required and should be designed in accordance with OHSA and the 2006 Canadian Foundation Engineering Manual (CFEM) by a professional engineer specializing in shoring design.

A pre-construction survey of buildings and infrastructure within the influence zone of the construction should be undertaken prior to start of construction.

The shoring system as well as adjacent settlement sensitive structures (buildings) and infrastructure should be monitored for movement (deflection) on a periodic basis during construction operations.

It is recommended that vibration monitoring be conducted at the site and at adjacent existing buildings and infrastructure during the installation of the shoring system and the pile foundations.

Many geologic materials deteriorate rapidly upon exposure to meteorological elements. Unless otherwise specifically indicated in this report, walls and floors of excavations must be protected from moisture, desiccation, and frost action throughout the course of construction.

11.2 De-Watering Requirements

Seepage of groundwater into the excavation should be anticipated but may be removed by collecting the water at low points within the excavation and pumping from sumps. In areas of high infiltration, a higher seepage rate should be anticipated and the need for high capacity pumps to keep the excavation dry should not be ignored.

Although this investigation has estimated the groundwater levels at the time of the fieldwork, and commented on dewatering and general construction problems, conditions may be present which are difficult to establish from standard boring and excavating techniques and which may affect the type and nature of dewatering procedures used by the contractor in practice. These conditions include local and seasonal fluctuations in the groundwater table, erratic changes in the soil profile, thin layers of soil with large or small permeabilities compared with the soil mass, etc. Only carefully controlled tests using pumped wells and observation wells will yield the quantitative data on groundwater volumes and pressures that are necessary to adequately engineer construction dewatering systems.

12 Pipe Bedding Requirements

The invert depths of the underground services are not known at the time of this geotechnical investigation.

The bedding for the underground services including material specifications, thickness of cover material and compaction requirements should conform to the City of Ottawa requirements and/or Ontario Provincial Standard Specification and Drawings (OPSS and OPSD).

It is recommended the pipe bedding consist of 300 mm thick OPSS 1010 Granular A bedding material. The bedding and surround materials should be compacted to at least 95 percent SPMDD. The bedding material should also be placed along the sides and on top of the pipe to provide a minimum cover of 300 mm. The bedding and surround material should be compacted to at least 95 percent of the SPMDD.

13 Backfilling Requirements and Suitability of On-Site Soils for Backfilling Purposes

The soils to be excavated from the site will comprise of fill, silty sand till and sand to silty sand. From a geotechnical perspective, these soils are not considered suitable for reuse as backfill material in the interior of the building. It may be possible to use portions of these materials above the groundwater level outside the building area, subject to further evaluation and testing at time of construction. Some portions of these soils may be used in landscaped areas.

Therefore, it is anticipated that the majority of the material required for backfilling purposes in the interior and exterior of the proposed building, in the service trenches and parking lot will need to be imported and should preferably conform to OPSS 1010 requirements for Granular A, Granular B Type II and Select Subgrade Material (SSM) placed in 300 mm thick lifts and each lift compacted to 98 percent SPMDD.

14 Pavement Structure

The subgrade for the outdoor surface parking lot at the site is anticipated to consist of approved existing fill subgrade and imported granular fill (compacted to 95 percent SPMDD) used to raise the grades at the site. Pavement structure thicknesses required for light duty traffic in the parking lot were computed and are shown in Table VI. The pavement structure thicknesses are based upon an estimate of the properties of the imported granular fill subgrade and functional design life of eight (8) to ten (10) years. The proposed functional design life represents the number of years to the first rehabilitation, assuming regular maintenance is carried out.

Table VI: Recommended Pavement Structure Thicknesses

Pavement Layer	Compaction Requirements	Light Duty Traffic (Cars only)
Asphaltic Concrete (PG 58-34)	92% to 97 % MRD	65 mm – 12.5 Cat B/HL3
Granular A Base (OPSS 1010) (crushed limestone)	100% SPMDD	150 mm
Granular B Type II Sub-base (OPSS 1010)	100% SPMDD	300 mm
SPMDD denotes Standard Proctor Maximum Dry Density, ASTM-D698-12e2 MRD denotes Maximum Relative Density, ASTM D2041		

The foregoing design assumes that construction is carried out during dry periods and that the subgrade is stable under the load of construction equipment. If construction is carried out during wet weather, and heaving or rolling of the subgrade is experienced, additional thickness of granular material and/or geotextile may be required.

Additional comments on the construction of the parking lot are as follows:

(1) As part of the subgrade preparation, the proposed parking lot should be stripped of unsuitable fill and other obviously unsuitable material. The subgrade should be properly shaped, crowned and proofrolled with a heavy roller in the full-time presence of a representative of this office. Any soft or spongy subgrade areas detected should be subexcavated and properly replaced with suitable approved backfill compacted to 95 percent SPMDD.

(2) The granular materials used for pavement construction should conform to Ontario Provincial Standard Specifications (OPSS) for Granular A and Granular B Type II and should be compacted to 100 percent SPMDD. The asphaltic concrete and its placement should meet OPSS 1151 requirements. It should be placed and compacted to OPSS 311 and 313.

It is recommended that EXP be retained to review the final pavement structure design and drainage plans prior to construction to ensure that they are consistent with the recommendations of this report.

15 Corrosion Potential of Subsurface Soils

Chemical tests limited to pH, sulphate, chloride and resistivity were undertaken on one (1) selected soil sample and the results are shown in Table VII. The laboratory certificate of analysis is provided in Appendix A.

Table VII: Corrosion Analyses on Selected Soil Sample

Borehole No. – Sample No.	Soil Type	Depth (m)	pH	Sulphate (%)	Chloride (%)	Resistivity (ohm-cm)
BH No. 1 – SS4	Sand	2.2-2.8	8.04	0.0094	0.0003	5460

The results indicate the sand sample has a negligible sulphate attack on subsurface concrete. The concrete mix design should be in accordance with CSA A.23.1-14.

Based on a review of the resistivity test results, the sand sample is considered to be mildly corrosive to bare steel as per the National Association of Corrosion Engineers (NACE). Appropriate measures should be undertaken to protect buried steel elements from corrosion.

16 General Comments

The comments given in this report are intended only for the guidance of the design engineers. The number of boreholes required to determine the localized underground conditions between boreholes affecting construction costs, techniques, sequencing, equipment, scheduling, etc., would be much greater than has been carried out for design purposes. Contractors bidding on or undertaking the works should in this light, decide on their own investigations, as well as their own interpretation of the factual borehole results to draw their own conclusions as to how the subsurface conditions may affect them.

The information contained in this report is not intended to reflect on environmental aspects of the soils. Reference is made to the Phase One and Two Environmental Site Assessments completed by EXP and reported under separate covers.

We trust this report will be satisfactory for your purposes. Should you have any questions, please do not hesitate to contact this office.

Figures

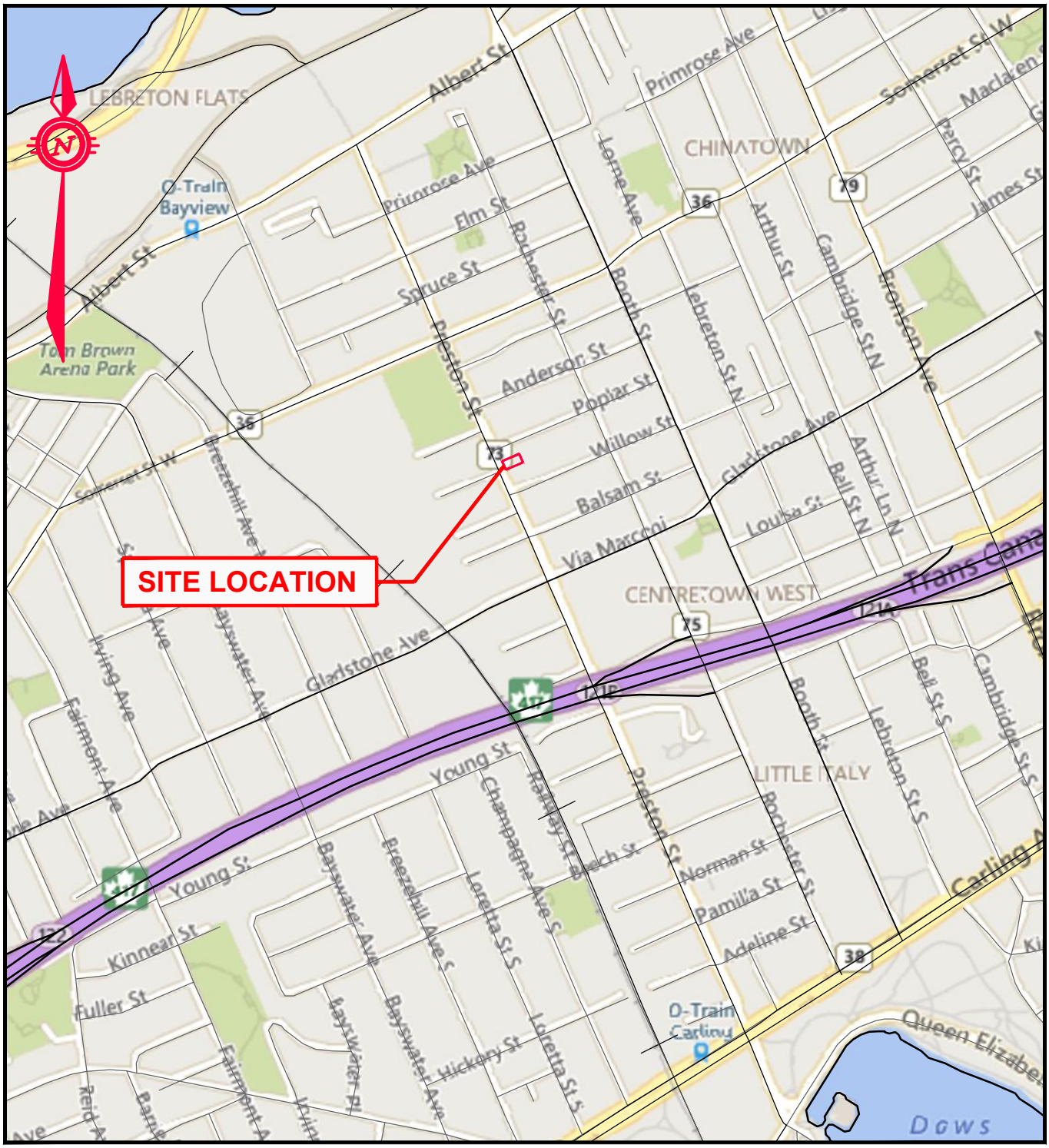

BACKGROUND MAP DATA © 2010, MAP ART PUBLISHING CORP.

0 100m 200m 400m

HORIZONTAL 1:10,000

EXP Services Inc. www.exp.com
t: +1.613.688.1899 | f: +1.613.225.7337
2650 Queensview Drive, Suite 100
Ottawa, ON K2B 8H6, Canada

DATE DEC. 2020	PROJECT: PROPOSED MULTI-USE DEVELOPMENT 185 PRESTON STREET, OTTAWA, ON		project no. OTT-00257522-A0
DESIGN S.P.	CHECKED S.P.		scale 1:10,000
DRAWN BY G.C.	TITLE: SITE LOCATION PLAN		FIG 1

Filename: e:\ott\ott-00257522-a0\60 execution\65 drawings_geot\185 present-site location plan.dwg
Last Saved: 1/8/2020 2:47:31 PM
Last Plotted: 1/8/2020 2:52:12 PM
Plotted by: CuiG
Pen Table: exp-64.ctb

BACKGROUND MAP DATA FROM CITY OF OTTAWA © 2019, TERANET ENTERPRISES

0 5m 10m 20m
HORIZONTAL 1:500

NOTES:
1. THE BOUNDARIES AND SOIL TYPES HAVE BEEN ESTABLISHED ONLY AT BOREHOLE LOCATIONS. BETWEEN BOREHOLES THEY ARE ASSUMED AND MAY BE SUBJECT TO CONSIDERABLE ERROR.
2. SOIL SAMPLES WILL BE RETAINED IN STORAGE FOR THREE MONTHS AND THEN DESTROYED UNLESS THE CLIENT ADVISES THAT AN EXTENDED TIME PERIOD IS REQUIRED.
3. BOREHOLE ELEVATIONS SHOULD NOT BE USED TO DESIGN BUILDING(S) OR FLOOR SLABS OR PARKING LOT(S) GRADES.
4. THIS DRAWING FORMS PART OF THE REPORT PROJECT NUMBER AS REFERENCED AND SHOULD BE USED ONLY IN CONJUNCTION WITH THIS REPORT.

LEGEND

BH2 — BOREHOLE NUMBER AND LOCATION

EXP Services Inc. www.exp.com
t: +1.613.688.1899 | f: +1.613.225.7337
2650 Queensview Drive, Suite 100
Ottawa, ON K2B 8H6, Canada

DATE: JAN. 2020	PROJECT: PROPOSED MULTI-USE DEVELOPMENT 185 PRESTON STREET, OTTAWA, ON	project no. OTT-00257522-A0
DESIGN: S.P. / CHECKED: S.P.		scale: 1:500
DRAWN BY: G.C.	TITLE: BOREHOLE LOCATION PLAN	FIG 2

Filename: \\exp\data\ott\ott-00257522-a\060 execution\65 drawings_geot\257522 figures.dwg
Last Saved: 1/13/2020 3:08:23 PM Plotted by: NugentM Pen Table: exp.ctb
Last Plotted: 2/11/2020 1:41:13 PM

Notes On Sample Descriptions

1. All sample descriptions included in this report follow the Canadian Foundations Engineering Manual soil classification system. This system follows the standard proposed by the International Societv for Soil Mechanics and Foundation Engineering. Laboratory grain size analyses provided by **exp** Services Inc. also follow the same system. Different classification systems may be used by others; one such system is the Unified Soil Classification. Please note that, with the exception of those samples where a grain size analysis has been made, all samples are classified visually. Visual classification is not sufficiently accurate to provide exact grain sizing or precise differentiation between size classification systems.

ISSMFE SOIL CLASSIFICATION

CLAY	SILT			SAND			GRAVEL			COBBLES	BOULDERS
	FINE	MEDIUM	COARSE	FINE	MEDIUM	COARSE	FINE	MEDIUM	COARSE		

0.002 0.006 0.02 0.06 0.2 0.6 2.0 6.0 20 60 200

EQUIVALENT GRAIN DIAMETER IN MILLIMETRES

CLAY (PLASTIC) TO	FINE	MEDIUM	CRS.	FINE	COARSE
SILT (NONPLASTIC)	SAND			GRAVEL	

UNIFIED SOIL CLASSIFICATION

2. Fill: Where fill is designated on the borehole log it is defined as indicated by the sample recovered during the boring process. The reader is cautioned that fills are heterogeneous in nature and variable in density or degree of compaction. The borehole description may therefore not be applicable as a general description of site fill materials. All fills should be expected to contain obstruction such as wood, large concrete pieces or subsurface basements, floors, tanks, etc., none of these may have been encountered in the boreholes. Since boreholes cannot accurately define the contents of the fill, test pits are recommended to provide supplementary information. Despite the use of test pits, the heterogeneous nature of fill will leave some ambiguity as to the exact composition of the fill. Most fills contain pockets, seams, or layers of organically contaminated soil. This organic material can result in the generation of methane gas and/or significant ongoing and future settlements. Fill at this site may have been monitored for the presence of methane gas and, if so, the results are given on the borehole logs. The monitoring process does not indicate the volume of gas that can be potentially generated nor does it pinpoint the source of the gas. These readings are to advise of the presence of gas only, and a detailed study is recommended for sites where any explosive gas/methane is detected. Some fill material may be contaminated by toxic/hazardous waste that renders it unacceptable for deposition in any but designated land fill sites; unless specifically stated the fill on this site has not been tested for contaminants that may be considered toxic or hazardous. This testing and a potential hazard study can be undertaken if requested. In most residential/commercial areas undergoing reconstruction, buried oil tanks are common and are generally not detected in a conventional geotechnical site investigation.

3. Till: The term till on the borehole logs indicates that the material originates from a geological process associated with glaciation. Because of this geological process the till must be considered heterogeneous in composition and as such may contain pockets and/or seams of material such as sand, gravel, silt or clay. Till often contains cobbles (60 to 200 mm) or boulders (over 200 mm). Contractors may therefore encounter cobbles and boulders during excavation, even if they are not indicated by the borings. It should be appreciated that normal sampling equipment cannot differentiate the size or type of any obstruction. Because of the horizontal and vertical variability of till, the sample description may be applicable to a very limited zone; caution is therefore essential when dealing with sensitive excavations or dewatering programs in till materials.

Log of Borehole BH-1

Project No: OTT-00257522-A0

Project: Proposed Multi-Use Development

Location: 185 Preston Street, Ottawa, Ontario

Date Drilled: 'December 18, 2019

Drill Type: Portable Drill

Datum: Geodetic Elevation

Logged by: M.L. Checked by: S.P.

Figure No. 3

Page. 1 of 1

Split Spoon Sample ☒
Auger Sample ◧
SPT (N) Value ○
Dynamic Cone Test ——
Shelby Tube ■
Shear Strength by Vane Test +S
Combustible Vapour Reading □
Natural Moisture Content ×
Atterberg Limits ⊢—⊖
Undrained Triaxial at % Strain at Failure ⊕
Shear Strength by Penetrometer Test ▲

Geodetic Elevation m	SOIL DESCRIPTION
58.2	
58.1	**CONCRETE** ~100mm With 20 mm diameter steel reinforcing bar
	GRANULAR FILL (BASE) Silty sand with gravel, brown, moist, (loose)
57.5	**FILL** Cobbles and boulders
56.7	**GLACIAL TILL** Silty sand with gravel, cobbles and boulders, grey, wet, (compact)
56.1	**SAND** Brown, moist to wet, (loose to compact)
52.8	
52.4	Dynamic Cone Penetration Test (DCPT) conducted from 5.8 m depth to cone refusal at 8.4 m depth.
49.8	**Cone Refusal at 8.4 m Depth**

Standard Penetration Test N Value (20, 40, 60, 80); Shear Strength (50, 100, 150, 200 kPa); Combustible Vapour Reading (ppm) (250, 500, 750); Natural Moisture Content % / Atterberg Limits (% Dry Weight) (20, 40, 60)

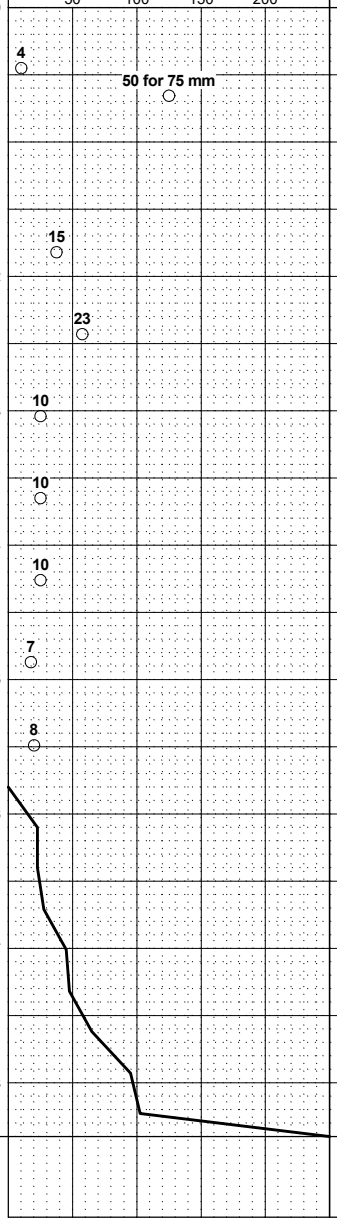

Sample	Natural Unit Wt. kN/m³
SS1	
SS2	
Run 1	
SS3	
SS4	
SS5	
SS6	
SS7	
SS8	
SS9	

NOTES:
1. Borehole data requires interpretation by EXP before use by others
2. A 32 mm diameter monitoring well installed as shown.
3. Field work supervised by an EXP representative.
4. See Notes on Sample Descriptions
5. Log to be read with EXP Report OTT-00257522-A0

WATER LEVEL RECORDS

Date	Water Level (m)	Hole Open To (m)
21 days	5.4	

CORE DRILLING RECORD

Run No.	Depth (m)	% Rec.	RQD %

Log of Borehole BH-2

Project No: OTT-00257522-A0

Project: Proposed Multi-Use Development

Location: 185 Preston Street, Ottawa, Ontario

Figure No. 4

Page. 1 of 1

Date Drilled: 'December 18, 2019

Drill Type: Portable Drill

Datum: Geodetic Elevation

Logged by: M.L. Checked by: S.P.

Split Spoon Sample ⊠
Auger Sample ◧
SPT (N) Value ○
Dynamic Cone Test ——
Shelby Tube ■
Shear Strength by Vane Test +S
Combustible Vapour Reading □
Natural Moisture Content ×
Atterberg Limits ⊢—⊖
Undrained Triaxial at % Strain at Failure ⊕
Shear Strength by Penetrometer Test ▲

GWL	SYMBOL	SOIL DESCRIPTION	Geodetic Elevation m	Depth	Standard Penetration Test N Value (20 40 60 80) / Shear Strength kPa (50 100 150 200)	Combustible Vapour Reading (ppm) (250 500 750) / Natural Moisture Content % / Atterberg Limits (% Dry Weight) (20 40 60)	SAMPLES	Natural Unit Wt. kN/m³
		CONCRETE ~80 mm	56.75	0				
		GRANULAR FILL (BASE) ~180 mm	56.7					
		SILTY SAND Brown, moist to wet, (loose to compact)	56.5		5	×	SS1	
				1	6	×	SS2	
				2	7	×	SS3	
				3	10	×	SS4	
			52.75	4	12		SS5	
		Borehole Terminated at 4.3 m Depth	52.5					

NOTES:

1. Borehole data requires interpretation by EXP before use by others
2. A 19 mm diameter standpipe installed as shown.
3. Field work supervised by an EXP representative.
4. See Notes on Sample Descriptions
5. Log to be read with EXP Report OTT-00257522-A0

WATER LEVEL RECORDS

Date	Water Level (m)	Hole Open To (m)
21 days	4.0	

CORE DRILLING RECORD

Run No.	Depth (m)	% Rec.	RQD %

Log of Borehole BH-3

Project No: OTT-00257522-A0

Project: Proposed Multi-Use Development

Location: 185 Preston Street, Ottawa, Ontario

Date Drilled: 'January 24, 2020

Drill Type: Mini-Rubber Track Mounted Drill Rig

Datum: Geodetic Elevation

Logged by: M.L. Checked by: S.P.

Figure No. 5

Page. 1 of 1

Split Spoon Sample ☒
Auger Sample ◧
SPT (N) Value ○
Dynamic Cone Test ——
Shelby Tube ■
Shear Strength by Vane Test +S

Combustible Vapour Reading □
Natural Moisture Content ×
Atterberg Limits ⊢—⊖
Undrained Triaxial at % Strain at Failure ⊕
Shear Strength by Penetrometer Test ▲

GWL	SYMBOL	SOIL DESCRIPTION	Geodetic Elevation m	Depth	Standard Penetration Test N Value (20 40 60 80) / Shear Strength kPa (50 100 150 200)	Combustible Vapour Reading (ppm) (250 500 750) / Natural Moisture Content % / Atterberg Limits (% Dry Weight) (20 40 60)	SAMPLES	Natural Unit Wt. kN/m³
		Power Augered from Ground Surface to a 4.6 m Depth.	58.2	0				
			53.6	5	6		SS1	
		SAND Brown to grey-brown, wet, (loose)		5	5		SS2	
			52.2	6	4		SS3	
		SAND Grey, wet, (loose to compact)		7	7		SS4	
				8	8		SS5	
				8	11		SS6	
			49.4	9	23		SS7	
		GLACIAL TILL Silty sand with gravel, cobbles and boulders, grey, wet, (compact)		9	23		SS8	
			48.0	10	50/150 mm		SS9	
		LIMESTONE BEDROCK Shale partings, grey, (fair quality)		11			RUN 1	
			46.8					
		Borehole Terminated at 11.4 m Depth						

NOTES:

1. Borehole data requires interpretation by EXP before use by others
2. Borehole backfilled upon completion of drilling.
3. Field work supervised by an EXP representative.
4. See Notes on Sample Descriptions
5. Log to be read with EXP Report OTT-00257522-A0

WATER LEVEL RECORDS

Date	Water Level (m)	Hole Open To (m)

CORE DRILLING RECORD

Run No.	Depth (m)	% Rec.	RQD %
1	10.2 - 11.4	100	52

EXP Services Inc.
100-2650 Queensview Drive
Ottawa, ON K2B 8H6

Grain-Size Distribution Curve
Method of Test For Particle Size Analysis of Soil
ASTM C-136/ASTM D422

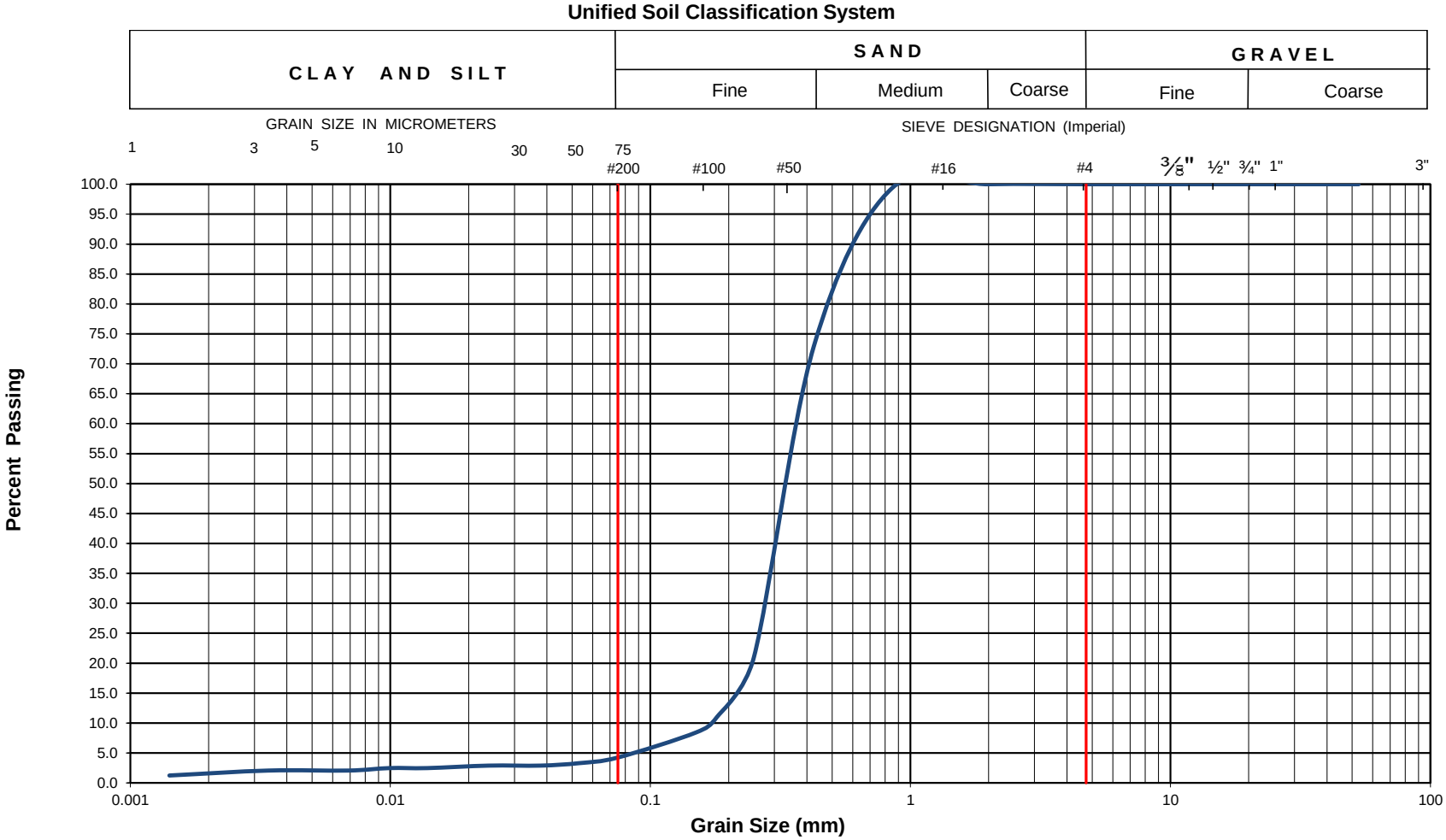

EXP Project No.:	**OTT-00257522-A0**	**Project Name :**	**Proposed Multi-Use Development**						
Client :	**Ms. Siffan Rahman**	**Project Location :**	**185 Preston Street, Ottawa, ON**						
Date Sampled :	**December 18, 2020**	**Borehole No:**	**BH1**	**Sample No.:**	**SS6**	**Depth (m) :**	**3.3-3.9**		
Sample Description :		**% Silt and Clay**	**4**	**% Sand**	**96**	**% Gravel**	**0**	**Figure :**	**6**
Sample Description :		**Poorly Graded Sand (SP)**							

EXP Services Inc.
100-2650 Queensview Drive
Ottawa, ON K2B 8H6

Grain-Size Distribution Curve
Method of Test For Particle Size Analysis of Soil
ASTM C-136/ASTM D422

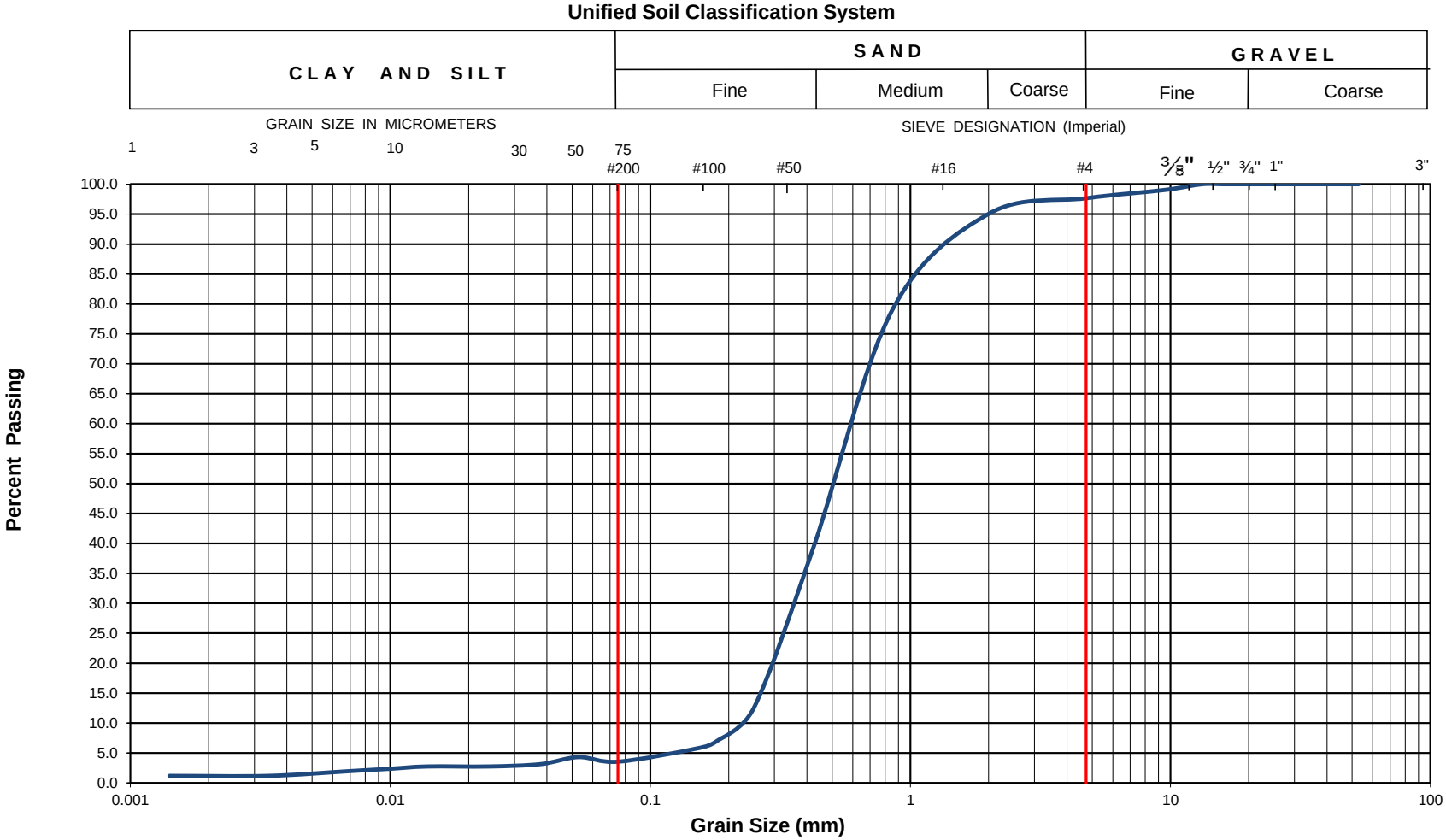

EXP Project No.:	**OTT-00257522-A0**	**Project Name :**	**Proposed Multi-Use Development**						
Client :	**Ms. Siffan Rahman**	**Project Location :**	**185 Preston Street, Ottawa, ON**						
Date Sampled :	**December 18, 2020**	**Borehole No:**	**BH1**	**Sample No.:**	**SS9**	**Depth (m) :**	**5.2-5.8**		
Sample Description :		**% Silt and Clay**	**4**	**% Sand**	**94**	**% Gravel**	**2**	**Figure :**	**7**
Sample Description :		**Poorly Graded Sand (SP)**							

EXP Services Inc.
100-2650 Queensview Drive
Ottawa, ON K2B 8H6

Grain-Size Distribution Curve
Method of Test For Particle Size Analysis of Soil
ASTM C-136/ASTM D422

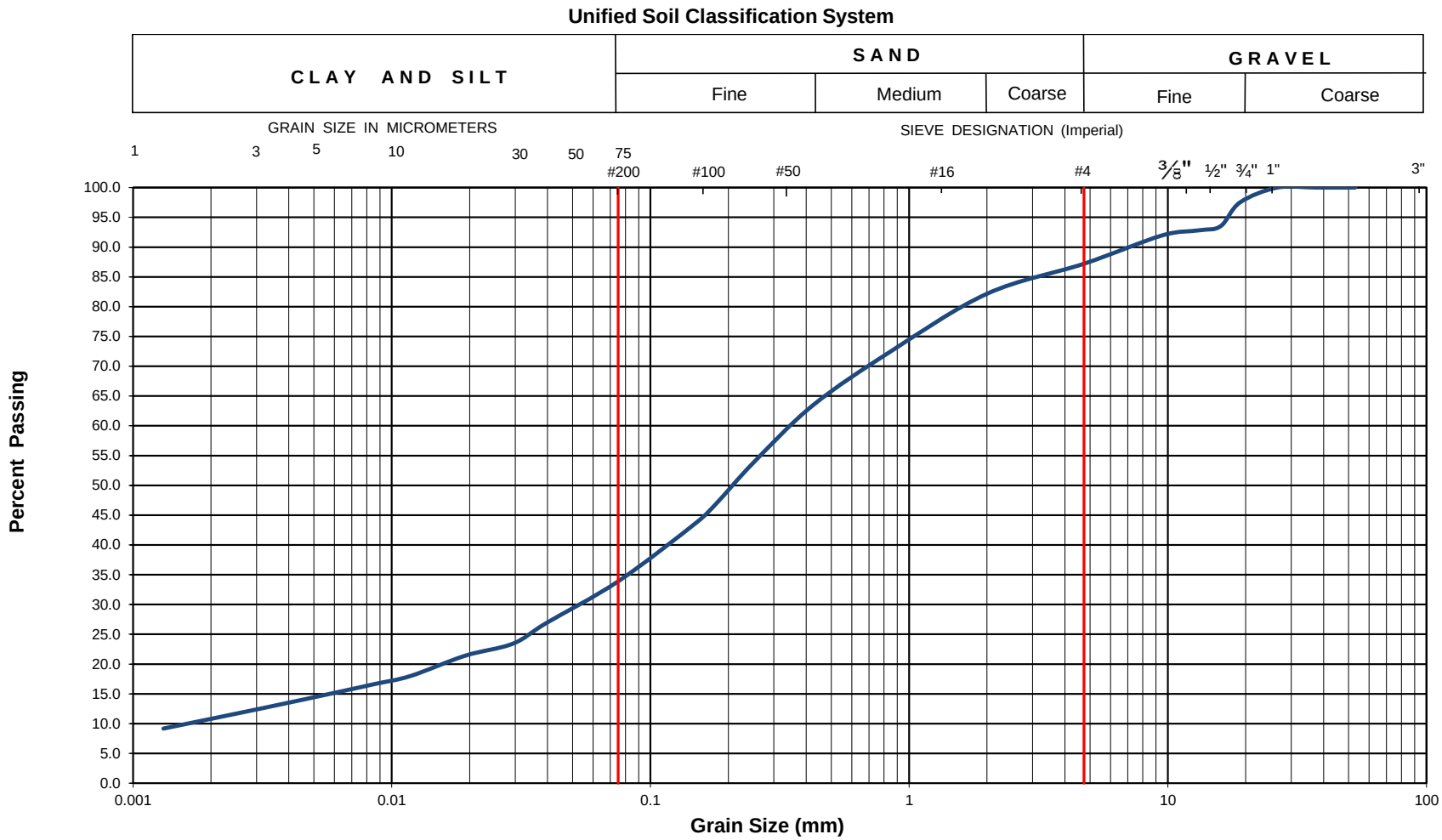

EXP Project No.:	**OTT-00257522-A0**	**Project Name :**	**Proposed Multi-Use Development**						
Client :	**Ms. Siffan Rahman**	**Project Location :**	**185 Preston Street, Ottawa, ON**						
Date Sampled :	**December 18, 2020**	**Borehole No:**	**BH2**	**Sample No.:**	**SS1**	**Depth (m) :**	**0.3-0.9**		
Sample Description :		**% Silt and Clay**	**34**	**% Sand**	**53**	**% Gravel**	**13**	**Figure :**	**8**
Sample Description :		**Silty Sand (SM)**							

EXP Services Inc.
100-2650 Queensview Drive
Ottawa, ON K2B 8H6

Grain-Size Distribution Curve
Method of Test For Sieve Analysis of Aggregate
ASTM C-136

Unified Soil Classification System

CLAY AND SILT	SAND			GRAVEL	
	Fine	Medium	Coarse	Fine	Coarse

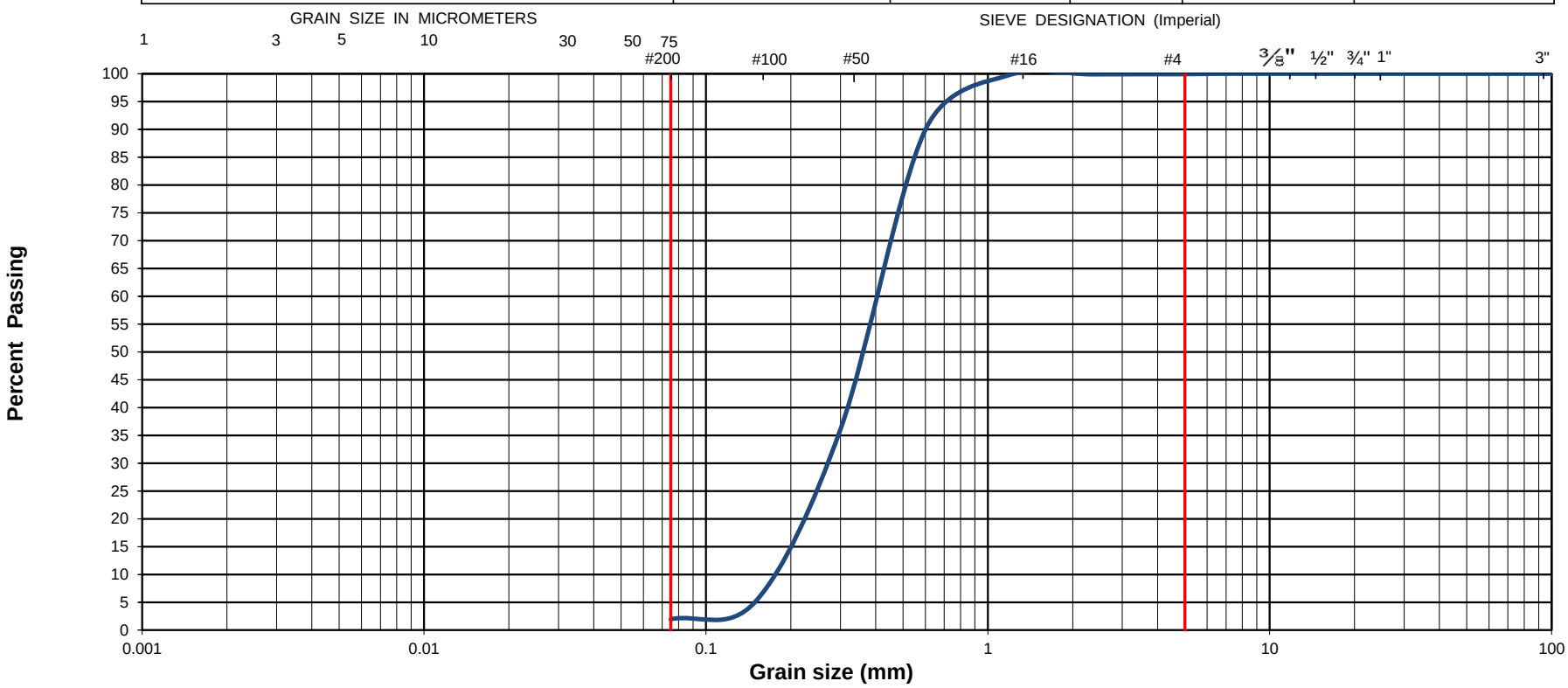

EXP Project No.:	**OTT-00257522-A0**	**Project Name :**	**Proposed Multi-Use Development**				
Client :	**Ms. Siffan Rahman**	**Project Location :**	**185 Preston Street, Ottawa, ON**				
Date Sampled :	**January 24, 2020**	**Borehole No:**	**BH3**	**Sample:**	**SS3**	**Depth (m) :**	**6.1-6.7**
Sample Composition :		**Gravel (%)**	**0**	**Sand (%)**	**98**	**Silt & Clay (%)**	**2**
Sample Description :		**Poorly Graded Sand (SP)**				**Figure :**	**9**

EXP Services Inc.
100-2650 Queensview Drive
Ottawa, ON K2B 8H6

Grain-Size Distribution Curve
Method of Test For Sieve Analysis of Aggregate
ASTM C-136

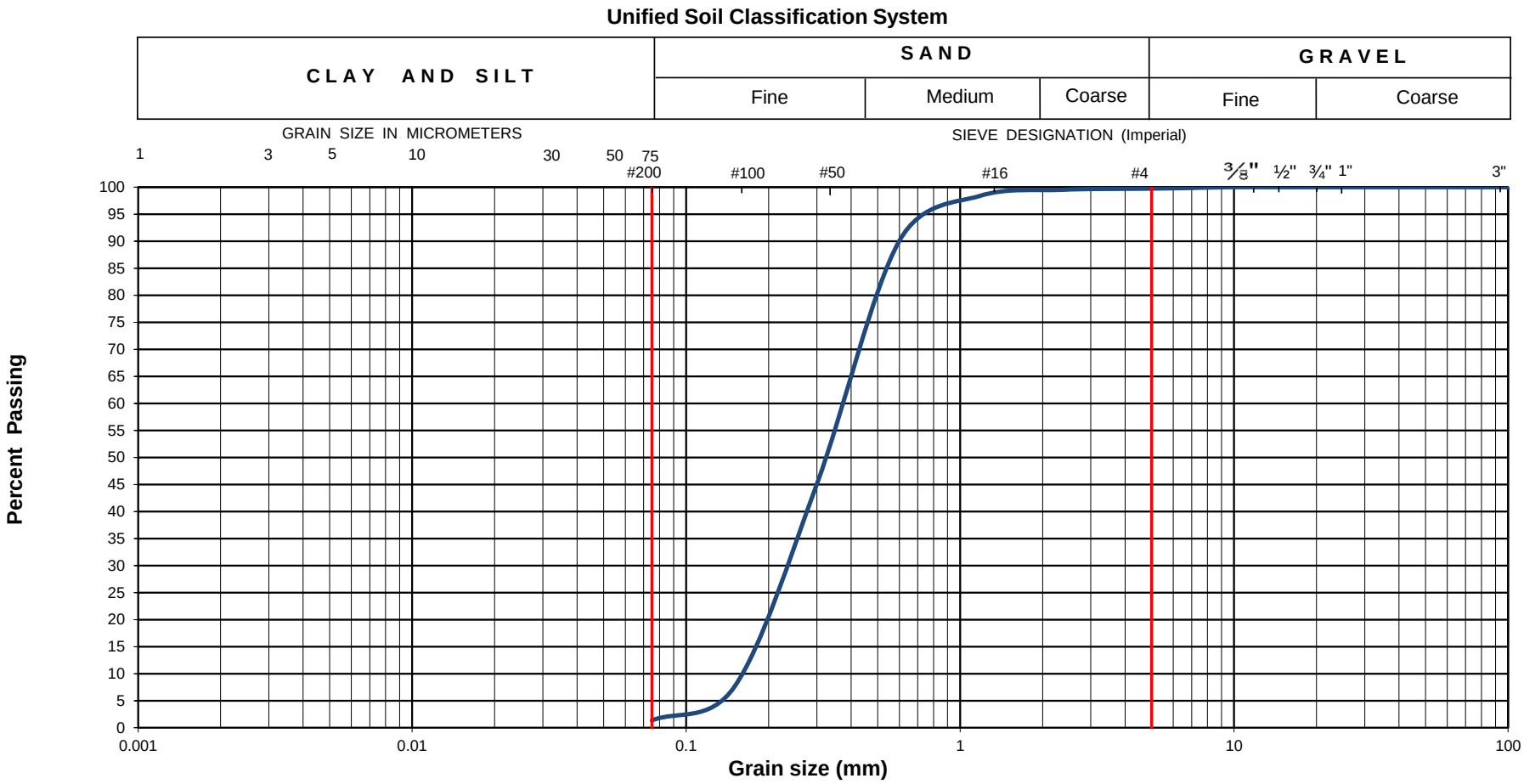

EXP Project No.:	**OTT-00257522-A0**	**Project Name :**	**Proposed Multi-Use Development**				
Client :	**Ms. Siffan Rahman**	**Project Location :**	**185 Preston Street, Ottawa, ON**				
Date Sampled :	**January 24, 2020**	**Borehole No:**	**BH3**	**Sample:**	**SS5**	**Depth (m) :**	**7.6-8.2**
Sample Composition :		**Gravel (%)**	**0**	**Sand (%)**	**99**	**Silt & Clay (%)**	**1**
Sample Description :		**Poorly Graded Sand (SP)**				**Figure :**	**10**

EXP Services Inc.
100-2650 Queensview Drive
Ottawa, ON K2B 8H6

Grain-Size Distribution Curve
Method of Test For Sieve Analysis of Aggregate
ASTM C-136

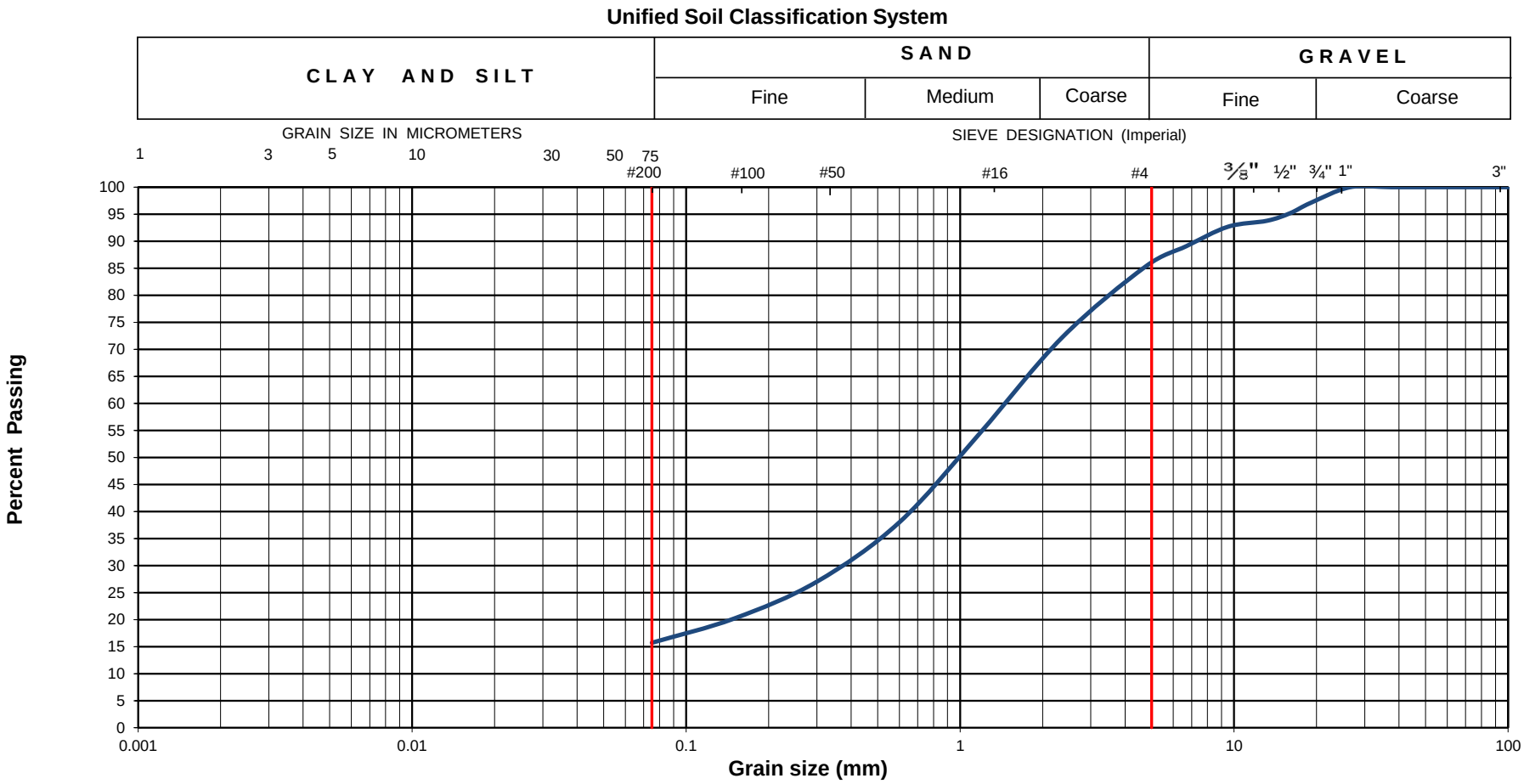

EXP Project No.:	**OTT-00257522-A0**	**Project Name :**	**Proposed Multi-Use Development**				
Client :	**Ms. Siffan Rahman**	**Project Location :**	**185 Preston Street, Ottawa, ON**				
Date Sampled :	**January 24, 2020**	**Borehole No:**	**BH3**	**Sample:**	**SS8**	**Depth (m) :**	**9.4-10.0**
Sample Composition :		**Gravel (%)**	**15**	**Sand (%)**	**69**	**Silt & Clay (%)**	**16**
Sample Description :		**Glacial Till: Silty Sand with Gravel (SM)**				**Figure :**	**11**

Appendix A: Laboratory Certificate of Analysis

5835 COOPERS AVENUE
MISSISSAUGA, ONTARIO
CANADA L4Z 1Y2
TEL (905)712-5100
FAX (905)712-5122
http://www.agatlabs.com

CLIENT NAME: **EXP SERVICES INC**
2650 QUEENSVIEW DRIVE, UNIT 100
OTTAWA, ON K2B8H6
(613) 688-1899

ATTENTION TO: **Maxime Leroux**

PROJECT: **OTT-257522-AO**

AGAT WORK ORDER: **20Z561491**

SOIL ANALYSIS REVIEWED BY: **Amanjot Bhela, Inorganic Supervisor**

DATE REPORTED: **Jan 14, 2020**

PAGES (INCLUDING COVER): **5**

VERSION*: **1**

Should you require any information regarding this analysis please contact your client services representative at (905) 712-5100

NOTES

All samples will be disposed of within 30 days following analysis. Please contact the lab if you require additional sample storage time.

5835 COOPERS AVENUE
MISSISSAUGA, ONTARIO
CANADA L4Z 1Y2
TEL (905)712-5100
FAX (905)712-5122
http://www.agatlabs.com

Certificate of Analysis

AGAT WORK ORDER: 20Z561491

PROJECT: OTT-257522-AO

CLIENT NAME: EXP SERVICES INC

ATTENTION TO: Maxime Leroux

SAMPLING SITE:185 Preston

SAMPLED BY:exp

Inorganic Chemistry (Soil)

DATE RECEIVED: 2020-01-07 **DATE REPORTED: 2020-01-14**

		SAMPLE DESCRIPTION:		BH1 SS4 7'-9'
		SAMPLE TYPE:		Soil
		DATE SAMPLED:		2019-12-18
Parameter	**Unit**	**G / S**	**RDL**	**849663**
Chloride (2:1)	µg/g		2	3
Sulphate (2:1)	µg/g		2	94
pH (2:1)	pH Units		NA	8.04
Resistivity (2:1) (Calculated)	ohm.cm		1	5460

Comments: RDL - Reported Detection Limit; G / S - Guideline / Standard

849663 pH, Chloride and Sulphate were determined on the extract obtained from the 2:1 leaching procedure (2 parts DI water: 1 part soil). Resistivity is a calculated parameter.

Analysis performed at AGAT Toronto (unless marked by *)

Certified By:

Amanjot Bhela

ASSOCIATION OF THE CHEMICAL PROFESSION OF ONTARIO
CHARTERED
AMANJOT BHELA
CHEMIST

AGAT Laboratories

5835 COOPERS AVENUE
MISSISSAUGA, ONTARIO
CANADA L4Z 1Y2
TEL (905)712-5100
FAX (905)712-5122
http://www.agatlabs.com

Quality Assurance

CLIENT NAME: EXP SERVICES INC

PROJECT: OTT-257522-AO

SAMPLING SITE:185 Preston

AGAT WORK ORDER: 20Z561491

ATTENTION TO: Maxime Leroux

SAMPLED BY:exp

Soil Analysis

RPT Date: Jan 14, 2020			DUPLICATE				REFERENCE MATERIAL			METHOD BLANK SPIKE			MATRIX SPIKE		
PARAMETER	Batch	Sample Id	Dup #1	Dup #2	RPD	Method Blank	Measured Value	Acceptable Limits		Recovery	Acceptable Limits		Recovery	Acceptable Limits	
								Lower	Upper		Lower	Upper		Lower	Upper
Inorganic Chemistry (Soil)															
Chloride (2:1)	848656		44	45	2.2%	< 2	92%	80%	120%	103%	80%	120%	110%	70%	130%
Sulphate (2:1)	848656		47	47	0.0%	< 2	99%	80%	120%	105%	80%	120%	109%	70%	130%
pH (2:1)	848656		7.96	8.11	1.9%	NA	101%	90%	110%	NA			NA		

Comments: NA signifies Not Applicable.
Duplicate Qualifier: As the measured result approaches the RL, the uncertainty associated with the value increases dramatically, thus duplicate acceptance limits apply only where the average of the two duplicates is greater than five times the RL
pH duplicates QA acceptance criteria was met relative as stated in Table 5-15 of Analytical Protocol document.

Certified By: Amanjot Bhela

CHARTERED CHEMIST AMANJOT BHELA — ASSOCIATION OF THE CHEMICAL PROFESSION OF ONTARIO

5835 COOPERS AVENUE
MISSISSAUGA, ONTARIO
CANADA L4Z 1Y2
TEL (905)712-5100
FAX (905)712-5122
http://www.agatlabs.com

Method Summary

CLIENT NAME: EXP SERVICES INC

AGAT WORK ORDER: 20Z561491

PROJECT: OTT-257522-AO

ATTENTION TO: Maxime Leroux

SAMPLING SITE:185 Preston

SAMPLED BY:exp

PARAMETER	AGAT S.O.P	LITERATURE REFERENCE	ANALYTICAL TECHNIQUE
Soil Analysis			
Chloride (2:1)	INOR-93-6004	McKeague 4.12 & SM 4110 B	ION CHROMATOGRAPH
Sulphate (2:1)	INOR-93-6004	McKeague 4.12 & SM 4110 B	ION CHROMATOGRAPH
pH (2:1)	INOR 93-6031	MSA part 3 & SM 4500-H+ B	PH METER
Resistivity (2:1) (Calculated)	INOR-93-6036	McKeague 4.12, SM 2510 B,SSA #5 Part 3	CALCULATION

AGAT Laboratories

5835 Coopers Avenue
Mississauga, Ontario L4Z 1Y2
Ph: 905.712.5100 Fax: 905.712.5122
webearth.agatlabs.com

Chain of Custody Record

If this is a Drinking Water sample, please use Drinking Water Chain of Custody Form (potable water consumed by humans)

Laboratory Use Only

Work Order #: 20Z561491

Cooler Quantity: one

Arrival Temperatures: 18.2 | 18.6 | 18.3

CT - 9.6 | |

Custody Seal Intact: ☐ Yes ☐ No ☐ N/A

Notes:

Report Information:

Company: EXP

Contact: Maxime Leroux

Address: 2650 Queensview Drive Suite 100
Ottawa ON K2B 8H6

Phone: 613-688-1899 Fax:

Reports to be sent to:

1. Email: Maxime.Leroux@exp.com
2. Email:

Regulatory Requirements: ☐ No Regulatory Requirement

(Please check all applicable boxes)

☐ Regulation 153/04
Table _____ *Indicate One*
☐ Ind/Com
☐ Res/Park
☐ Agriculture
Soil Texture *(Check One)*
☐ Coarse
☐ Fine

☐ Sewer Use
☐ Sanitary
☐ Storm
Region _____ *Indicate One*
☐ MISA

☐ Regulation 558
☐ CCME
☐ Prov. Water Quality Objectives (PWQO)
☐ Other
_____ *Indicate One*

Is this submission for a **Record of Site Condition**? ☐ Yes ☐ No

Report Guideline on *Certificate of Analysis* ☐ Yes ☐ No

Turnaround Time (TAT) Required:

Regular TAT ☑ 5 to 7 Business Days

Rush TAT (Rush Surcharges Apply)

☐ 3 Business Days ☐ 2 Business Days ☐ Next Business Day

OR Date Required (Rush Surcharges May Apply):

Please provide prior notification for rush TAT
**TAT is exclusive of weekends and statutory holidays*

For 'Same Day' analysis, please contact your AGAT CPM

Project Information:

Project: OTT-257522-A0

Site Location: 185 Preston

Sampled By: EXP

AGAT Quote #: PO:

Please note: If quotation number is not provided, client will be billed full price for analysis.

Invoice Information:

Bill To Same: Yes ☑ No ☐

Company:

Contact:

Address:

Email:

Sample Matrix Legend

B	Biota
GW	Ground Water
O	Oil
P	Paint
S	Soil
SD	Sediment
SW	Surface Water

Sample Identification	Date Sampled	Time Sampled	# of Containers	Sample Matrix	Comments/ Special Instructions	Field Filtered - Metals, Hg, CrVI (Y/N)	Metals and Inorganics (☐ All Metals ☐ 153 Metals (excl. Hydrides) ☐ Hydride Metals ☐ 153 Metals (Incl. Hydrides))	ORPs: ☐ B-HWS ☐ Cl ☐ CN ☐ Cr^{6+} ☐ EC ☐ FOC ☐ Hg ☐ pH ☐ SAR	Full Metals Scan	Regulation/Custom Metals	Nutrients: ☐ TP ☐ NH_3 ☐ TKN ☐ NO_3 ☐ NO_2 ☐ NO_3+NO_2	Volatiles: ☐ VOC ☐ BTEX ☐ THM	PHCs F1 - F4	ABNs	PAHs	PCBs: ☐ Total ☐ Aroclors	Organochlorine Pesticides	TCLP: ☐ M&I ☐ VOCs ☐ ABNs ☐ B(a)P ☐ PCBs	Sewer Use	pH	Sulphate	Chloride	Electro Resistivity		Potentially Hazardous or High Concentration (Y/N)
BH 1 SS4 7'-9'	Dec 18/19																			✓	✓	✓	✓			

Samples Relinquished By (Print Name and Sign):	Date	Time	Samples Received By (Print Name and Sign):	Date	Time
Ryan D. Bigwood	Jan 7/20	4:00pm		2020/01/07	15h37
Samples Relinquished By (Print Name and Sign): FedEx	2020/01/07	16h00	Samples Received By (Print Name and Sign):		
Samples Relinquished By (Print Name and Sign):			Samples Received By (Print Name and Sign): Sharmin	Jan 8/2020	9:55am

Page 1 of 1

N°: T 093822

Document ID: DW-78-151-030

Pink Copy - Client | Yellow Copy - AGAT | White Copy- AGAT

Appendix B: 2015 National Building Code Seismic Hazard Calculation

2015 National Building Code Seismic Hazard Calculation

INFORMATION: Eastern Canada English (613) 995-5548 français (613) 995-0600 Facsimile (613) 992-8836
Western Canada English (250) 363-6500 Facsimile (250) 363-6565

Site: 45.406N 75.713W **User File Reference:** 185 Preston Street, Ottawa, Ontario 2020-02-03 17:26 UT

Probability of exceedance per annum	0.000404	0.001	0.0021	0.01
Probability of exceedance in 50 years	2 %	5 %	10 %	40 %
Sa (0.05)	0.445	0.246	0.147	0.044
Sa (0.1)	0.521	0.298	0.185	0.061
Sa (0.2)	0.437	0.254	0.160	0.055
Sa (0.3)	0.332	0.194	0.124	0.043
Sa (0.5)	0.236	0.138	0.088	0.031
Sa (1.0)	0.118	0.069	0.044	0.015
Sa (2.0)	0.056	0.033	0.020	0.006
Sa (5.0)	0.015	0.008	0.005	0.001
Sa (10.0)	0.005	0.003	0.002	0.001
PGA (g)	0.280	0.162	0.101	0.032
PGV (m/s)	0.196	0.110	0.068	0.021

Notes: Spectral (Sa(T), where T is the period in seconds) and peak ground acceleration (PGA) values are given in units of g (9.81 m/s^2). Peak ground velocity is given in m/s. Values are for "firm ground" (NBCC2015 Site Class C, average shear wave velocity 450 m/s). NBCC2015 and CSAS6-14 values are highlighted in yellow. Three additional periods are provided - their use is discussed in the NBCC2015 Commentary. Only 2 significant figures are to be used. **These values have been interpolated from a 10-km-spaced grid of points. Depending on the gradient of the nearby points, values at this location calculated directly from the hazard program may vary. More than 95 percent of interpolated values are within 2 percent of the directly calculated values.**

References

National Building Code of Canada 2015 NRCC no. 56190; Appendix C: Table C-3, Seismic Design Data for Selected Locations in Canada

Structural Commentaries (User's Guide - NBC 2015: Part 4 of Division B)
Commentary J: Design for Seismic Effects

Geological Survey of Canada Open File 7893 Fifth Generation Seismic Hazard Model for Canada: Grid values of mean hazard to be used with the 2015 National Building Code of Canada

See the websites www.EarthquakesCanada.ca and www.nationalcodes.ca for more information

Natural Resources Canada Ressources naturelles Canada

Canada

Appendix C: Ontario Provincial Standard Drawing (OPSD) 3001.100, Type II, dated November 2010

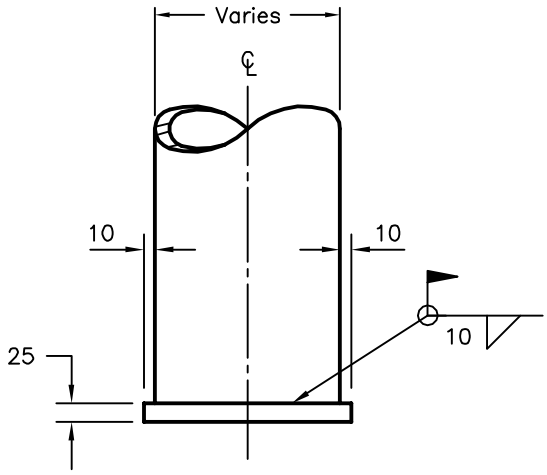

TYPE I

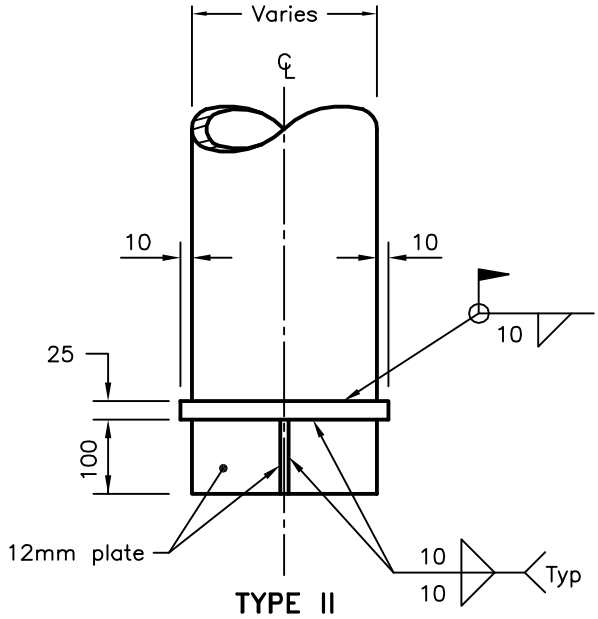

TYPE II

SHOE DETAILS

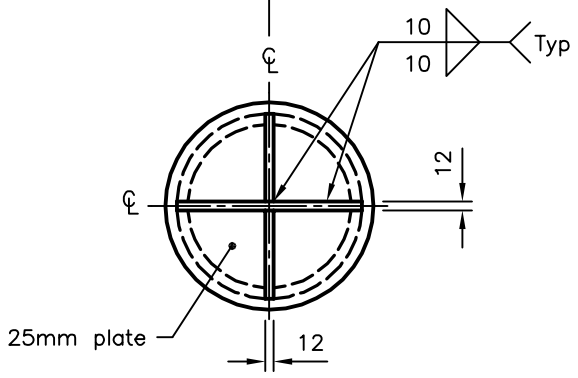

BOTTOM VIEW

NOTES:

A Driving shoe Type I or II as specified.
B Welding shall be according to CSA W59.
C Steel plates shall be according to CSA G40.20/G40.21, Grade 300W.
D All dimensions are in millimetres unless otherwise shown.

ONTARIO PROVINCIAL STANDARD DRAWING	Nov 2010	Rev	1
FOUNDATION PILES STEEL TUBE PILE DRIVING SHOE			
	OPSD 3001.100		

List of Distribution

Report Distributed To:

Ms. Siffan Rahman; siffan.rahman@gmail.com
Mr. Najib Khan; nbs21construction@gmail.com