DRAWING LIST

E001	LEGEND, DRAWINGS LIST, AND GENERAL NOTES
ED001	ELECTRICAL SITE PLAN – DEMOLITION
E002A	ELECTRICAL SITE PLAN – NEW WORK
E002B	ELECTRICAL SITE PLAN DETAILS AND PHOTOMETRICS
E002C	ELECTRICAL MCLD LIGHTING FIXTURE SCHEDULE
E003	RESERVED (NOT INCLUDED)
E004	EQUIPMENT SCHEDULE (NOT INCLUDED)
E100	ELECTRICAL LEVEL 0 LIGHTING LAYOUT (NOT INCLUDED)
E101	ELECTRICAL LEVEL 1 LIGHTING LAYOUT (NOT INCLUDED)
E101A	ELECTRICAL LEVEL 1 LIGHTING LAYOUT (CONTINUED) (NOT INCLUDED)
E102	ELECTRICAL LEVEL 2 LIGHTING LAYOUT (NOT INCLUDED)
E102A	ELECTRICAL LEVEL 2 LIGHTING LAYOUT (CONTINUED) (NOT INCLUDED)
E103	ELECTRICAL MEZZANINE LIGHTING LAYOUT (NOT INCLUDED)
E200	ELECTRICAL LEVEL 0 POWER LAYOUT (NOT INCLUDED)
E201	ELECTRICAL LEVEL 1 POWER LAYOUT (NOT INCLUDED)
E201A	ELECTRICAL LEVEL 1 POWER LAYOUT (CONTINUED) (NOT INCLUDED)
E202	ELECTRICAL LEVEL 2 POWER LAYOUT (NOT INCLUDED)
E202A	ELECTRICAL LEVEL 2 POWER (CONTINUED) (NOT INCLUDED)
E203	ELECTRICAL MEZZANINE POWER LAYOUT (NOT INCLUDED)
E204	ELECTRICAL ROOF PLANS (NOT INCLUDED)
E300	ELECTRICAL LEVEL 0 POWER DISTRIBUTION LAYOUT AND ROUTING (NOT INCLUDED)
E301	ELECTRICAL LEVEL 1 POWER DISTRIBUTION LAYOUT AND ROUTING (NOT INCLUDED)
E301A	ELECTRICAL LEVEL 1 POWER DISTRIBUTION LAYOUT AND ROUTING (CONTINUED) (NOT INCLUDED)
E302	ELECTRICAL LEVEL 2 POWER DISTRIBUTION LAYOUT AND ROUTING (NOT INCLUDED)
E302A	ELECTRICAL LEVEL 2 POWER DISTRIBUTION LAYOUT AND ROUTING (CONTINUED) (NOT INCLUDED)
E303	ELECTRICAL MEZZANNINE POWER DISTRIBUTION LAYOUT AND ROUTING (NOT INCLUDED)
E400	SINGLE LINE DIAGRAM (NOT INCLUDED)
E400A	SINGLE LINE DIAGRAM CONTINUED (NOT INCLUDED)
E500	DETAILS (NOT INCLUDED)

GENERAL NOTES:

A. UNLESS OTHERWISE NOTED, ELECTRICAL MATERIALS FOR REMOVAL BECOME THE CONTRACTOR'S PROPERTY AND SHALL BE TAKEN FROM SITE AND DISPOSED OF IN ACCORDANCE WITH PROVINCIAL STANDARDS.

B. MAINTAIN EXISTING REMAINING CIRCUITS (i.e. EXISTING SITE LIGHTING) AND ALL SYSTEMS WHICH PASS THROUGH ALL AREAS OF CONSTRUCTION. PROVIDE NECESSARY MATERIALS TO MAINTAIN SYSTEMS THAT ARE REMAINING. ENSURE ALL MATERIALS ARE CONCEALED WHEN CONSTRUCTION IS COMPLETED.

C. REINSTATE ALL EXISTING SYSTEMS REMAINING IMMEDIATELY THAT ARE INTERRUPTED DURING CONSTRUCTION. PROVIDE MATERIALS AS NECESSARY TO MAINTAIN SYSTEMS THAT ARE INTERRUPTED.

D. COORDINATE ELECTRICAL DEMOLITION, DISCONNECTIONS AND REMOVALS (i.E. EXISTING SITE LIGHTING) REQUIREMENTS FOR EQUIPMENT BEING REMOVED BY OTHER TRADES.

E. JUNCTION BOX COVERS TO HAVE CIRCUITS IDENTIFIED IN INDELIBLE BLACK INK.

F. ELECTRICAL CONTRACTOR SHALL TEST AND ENSURE ALL EQUIPMENT IS WORKING AT THE END OF EACH DAY.

G. ELECTRICAL SHALL CONFIRM EXACT BREAKER/FUSE SIZES ON SITE.

H. ALL WORK TO BE PERFORMED DURING SCHOOL HOURS. ELECTRICAL CONTRACTOR SHALL ALLOW FOR WEEKEND AND AFTER HOURS WORK PERIODS, WHEN REQUESTED BY CEPEO.

I. ELECTRICAL SHALL CONFIRM THE EXISTING AND NEW REQUIREMENTS TO ENSURE CORRECT RATINGS AND SYSTEM SIZES, BEFORE PLACING ORDER.

J. COORDINATE WITH ALGONQUIN COLLEGE FOR ANY/ALL SYSTEM SHUTDOWNS DURING THE DEMOLITION OR CONSTRUCTION PHASE OF CONTRACT FOR COORDINATION PURPOSES. ALLOW FOR ALL REQUIRED SHUTDOWNS TO BE PERFORMED OUTSIDE OF NORMAL SCHOOL HOURS. SHUTDOWN OF SYSTEM TO BE RE-ENERGIZED AND FULLY OPERATIONAL AT THE END OF SAME DAY'S WORK SHIFT.

K. THESE DRAWINGS INDICATE KNOWN CONDITIONS AND MAY NOT INDICATE ALL DEMOLITION REQUIREMENTS. THE ELECTRICAL CONTRACTOR SHALL VISIT THE SITE DURING THE TENDER PERIOD TO BECOME FAMILIAR WITH THE SITE.

L. PROVIDE ALL TEMPORARY SERVICES THROUGHOUT DEMOLITION AND CONSTRUCTION OF CONTRACT AREA. THESE TEMPORARY SERVICES INCLUDE POWER, LIGHTING AND FIRE ALARM COVERAGE WHERE REQUIRED. ALL TEMPORARY SYSTEMS ARE TO BE REMOVED AT THE END OF THE CONTRACT.

M. PROVIDE CUTTING, AND PATCHING OF CEMENTED/ASPHALTED AREAS AND OTHER SURFACES AS REQUIRED TO FIT THE ELECTRICAL LIGHTING STANDARDS.

SENSOR SWITCH SCHEDULE

TYPE	MANUFACTURER	CATALOGUE NUMBER	LOCATION	MOUNTING	REMARKS
$	WALL MOUNTED OCCUPANCY SENSOR DIMMER SWITCH	EQUAL TO WATTSTOPPER DW-311	SEE PLAN	WALL	DUAL TECHNOLOGY, PASSIVE INFRARED/ULTRASONIC C/W PUSHBUTTON OVERRIDE.
OS	OCCUPANCY SENSOR	EQUAL TO WATTSTOPPER LMDC-100	SEE PLAN	CEILING RECESSED	DIGITAL SENSOR WITH LCD DISPLAY AND PROGRAMMING PUSHBUTTON
OS	DAYLIGHT HARVESTING SENSOR	EQUAL TO WATTSTOPPER LMLS-500	SEE PLAN	CEILING RECESSED	DAYLIGHT RESPONSIVE ON/OFF, BI-LEVEL TRI-LEVEL OR DIMMING CONTROL FOR UP TO 3 LIGHTING ZONES
$D	DIMMER SWITCH	EQUAL TO WATTSTOPPER LMDM-101	SEE PLAN	WALL	DIMMING WALL SWITCH W/ LED INDICATOR AND IR COMMUNICATIONS
$S	SCENE SELECTOR SWITCH	EQUAL TO WATTSTOPPER LMSW-105	SEE PLAN	WALL	SCENE SWITCH
RC	DIMMING CONTROLLER	EQUAL TO WATTSTOPPER LMRC-112	SEE PLAN	CEILING	TO BE INSTALLED IN CEILING OR REMOTE

APPROVED
By Mark Young at 3:09 pm, Jan 10, 2020

MARK YOUNG, MCIP, RPP
(A) MANAGER, DEVELOPMENT REVIEW - WEST
PLANNING, INFRASTRUCTURE & ECONOMIC DEVELOPMENT DEPARTMENT, CITY OF OTTAWA

POWER

SYMBOL	DESCRIPTION
	SINGLE RECEPTACLE, TYPE AS INDICATED
	SINGLE RECEPTACLE, 120V, 20A
	QUADRAPLEX RECEPTACLE UNDER COMMON COVERPLATE 120V, 15A
	DUPLEX RECEPTACLE, 120V, 15A
	DUPLEX RECEPTACLE – OVER COUNTER, 120V, 15A
	DUPLEX RECEPTACLE, GFI TYPE
	DUPLEX RECEPTACLE – OVER COUNTER, GFI TYPE
	SPECIAL RECEPTACLE, VOLT & AMP AS INDICATED
	SPECIAL RECEPTACLE – OVER COUNTER, VOLT & AMP AS INDICATED
	DIRECT CONNECTION TO EQUIPMENT
	DIRECT CONNECTION TO EQUIPMENT – OVER COUNTER
D	CLOCK (D=DOUBLE FACE CLOCK)
	OUTLET BOX
	RECESSED PANEL
	SURFACE PANEL
	DISCONNECT SWITCH
	MANUAL MOTOR STARTER
	MAGNETIC MOTOR STARTER
	COMBINATION MAGNETIC STARTER
HD	HAND DRYER
	SPLITTER
	MOTOR – REFER TO MOTOR CONTROL SCHEDULE AND TO MECHANICAL DRAWING FOR LOCATION
	TRANSFORMER
	ELECTRIC FORCE FLOW HEATER
	CONDUIT SLEEVE

COMMUNICATIONS

SYMBOL	DESCRIPTION
	VOICE OUTLET
	VOICE OUTLET – OVER COUNTER
	VOICE OUTLET – WALL MOUNTED
	DATA OUTLET
	DATA OUTLET – OVER COUNTER
S	SPEAKER, CEILING MOUNTED
	INTERCOM OUTLET
	CABLEVISION OUTLET
E	WASHROOM ASSIST PUSHBUTTON OR PULLCORD
	WASHROOM ASSIST DOME LIGHT

NOTE:
ELECTRICAL CONTRACTOR TO PROVIDE CONDUITS AND BACKBOXES ONLY. CABLING AND PROVISION OF COMMMUNICATIONS DEVICES TO BE BY CEPEO.

LIGHTING

SYMBOL	DESCRIPTION
	LIGHTING FIXTURE, CEILING MOUNTED
	LIGHTING FIXTURE, CEILING MOUNTED
	LIGHTING FIXTURE WALL MOUNTED
	LIGHT STANDARD – POLE MOUNTED
	EXIT SIGN c/w DIRECTIONAL ARROWS, CEILING MOUNTED
	EXIT SIGN c/w DIRECTIONAL ARROWS, WALL MOUNTED
EBS	EMERGENCY BATTERY PACK c/w HEADS AS INDICATED
	REMOTE SINGLE/DOUBLE EM LTG HEADS, CEILING MTD
	REMOTE SINGLE/DOUBLE EM LTG HEADS, WALL MTD

FIRE ALARM

SYMBOL	DESCRIPTION
F	PULL STATION, INSTALLED AT 47.25" (1200mm) A.F.F.
F	FIRE ALARM BELL, INSTALLED AT 8' A.F.F.
	FIRE ALARM MINI-HORN, INSTALLED AT 8' A.F.F.
	WALL MOUNTED STROBE LIGHT, INSTALLED AT 8' A.F.F.
SD	SMOKE DETECTOR
	COMBINATION SMOKE/HEAT DETECTOR 57°C RATE OF RISE
SA	SMOKE ALARM
	FIRE ALARM MAGNETIC DOOR HOLDER (ALL EXISTING TO BE DEMOLISHED
FANN	FIRE ALARM ANNUNCIATOR
FACP	FIRE ALARM CONTROL PANEL
	COMBINATION HORN STROBE LIGHT
DSD	DUCT SMOKE DETECTOR

SECURITY

SYMBOL	DESCRIPTION
	SECURITY DOOR CONTACT
	SECURITY CCTV CAMERA
CR	CARD READER
ES	ELECTRIC STRIKE

NOTE:
ELECTRICAL CONTRACTOR TO PROVIDE CONDUITS AND BACKBOXES ONLY. CABLING AND PROVISION OF COMMMUNICATIONS DEVICES TO BE BY CEPEO CONTRACTOR.

ABBREVIATIONS

SYMBOL	DESCRIPTION
C	CEILING MOUNTED
H	MOUNTED AT HIGH LEVEL
S	SURFACE MOUNTED
ST	STOVE TOP
RG	RANGE
MW	MICROWAVE
DW	DISHWASHER
DR	DRYER
TP	TAMPERPROOF
WS	WASHER
CF	MOUNTED FLUSH ON TOP OF COUNTER
F	FLOOR MOUNTED
W	WALL MOUNTED

SWITCHING

SYMBOL	DESCRIPTION
$	SINGLE POLE TOGGLE SWITCH
$3	THREE-WAY TOGGLE SWITCH
$$$	GANGED SWITCHES
$	MOTION SENSOR SWITCH, WALL TYPE
OS	OCCUPANCY SENSOR, CEILING MOUNTED

LINEWORK LEGEND:

SYMBOL	DESCRIPTION
N	SYMBOLS WITH SUFFIX 'N' INDICATES EXISTING EQUIPMENT OR OUTLETS REMOVED & RE-INSTALLED IN NEW LOCATIONS
RR	SYMBOLS WITH SUFFIX 'RR' INDICATES EXISTING EQUIPMENT OR OUTLETS TO BE REMOVED & RE-INSTALLED IN SAME LOCATIONS
R	SYMBOLS WITH SUFFIX 'R' INDICATES EXISTING EQUIPMENT OR OUTLETS TO BE REMOVED & RELOCATED IN NEW LOCATIONS
	EXCEPT AS NOTED OTHERWISE, ALL EXISTING EQUIPMENT TO REMAIN IS SHOWN IN THIN SOLID LINES.
	EXCEPT AS NOTED OTHERWISE, ALL EXISTING EQUIPMENT TO BE DEMOLISHED OR RELOCATED IS SHOWN IN THICK DASHED LINES. RELOCATED ITEMS ARE WITH SUFFIX 'R', 'RR' OR 'N'
	EXCEPT AS NOTED OTHERWISE, ALL NEW EQUIPMENT IS SHOWN IN THICK SOLID LINES.
R	EXCEPT AS NOTED OTHERWISE, ALL NEW EQUIPMENT SHOWN IN THICK SOLID LINES WITH "R" INDICATES RELOCATED.

ALGONQUIN COLLEGE

Algonquin Students' ASSOCIATION

Project
ATHLETICS AND RECREATION CENTRE (ARC)

Prepared For
ALGONQUIN STUDENTS' ASSOCIATION

HOK Architects Corporation
205 Catherine Street, Suite 101
Ottawa, Ontario K2P 1C3 Canada
t +1 613 226 9650 f +1 613 226 9656

All reproduction & intellectual property rights reserved © 2019

In Association with

WSP
STRUCTURAL
2611 Queensview Drive, Suite 300
Ottawa, ON, K2B 8K2

WSP
MECHANICAL
2611 Queensview Drive, Suite 300
Ottawa, ON, K2B 8K2

WSP
ELECTRICAL
2611 Queensview Drive, Suite 300
Ottawa, ON, K2B 8K2

WSP
CIVIL
2611 Queensview Drive, Suite 300
Ottawa, ON, K2B 8K2

CSW Landscape Architects
LANDSCAPE
319 McRae Avenue, Suite 502
Ottawa, ON, K1Z 0B9

WSP
SUSTAINABILITY
2611 Queensview Drive, Suite 300
Ottawa, ON, K2B 8K2

Key Plan

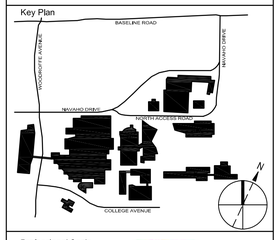

Professional Seals

LICENSED PROFESSIONAL ENGINEER
2019-09-24
191-01517-00
D. BADAOUI
100159830
PROVINCE OF ONTARIO

No.	Description	Date
1	ISSUED FOR SITE PLAN APPROVAL	2019/06/24
2	ISSUED FOR FOUNDATION PERMIT	2019/08/20
3	RE-ISSUED FOR SITE PLAN APPROVAL	2019/09/24

Drawn by: J.A. Reviewed by: D.B.
Project No: 191-01517-00

Sheet Title
LEGEND, DRAWING LIST AND GENERAL NOTES

Original drawing is A1. Do not scale contents of this drawing.

Sheet Number
E001

2019-09-12 3:57:33 PM

D07-12-19-0114

#17981

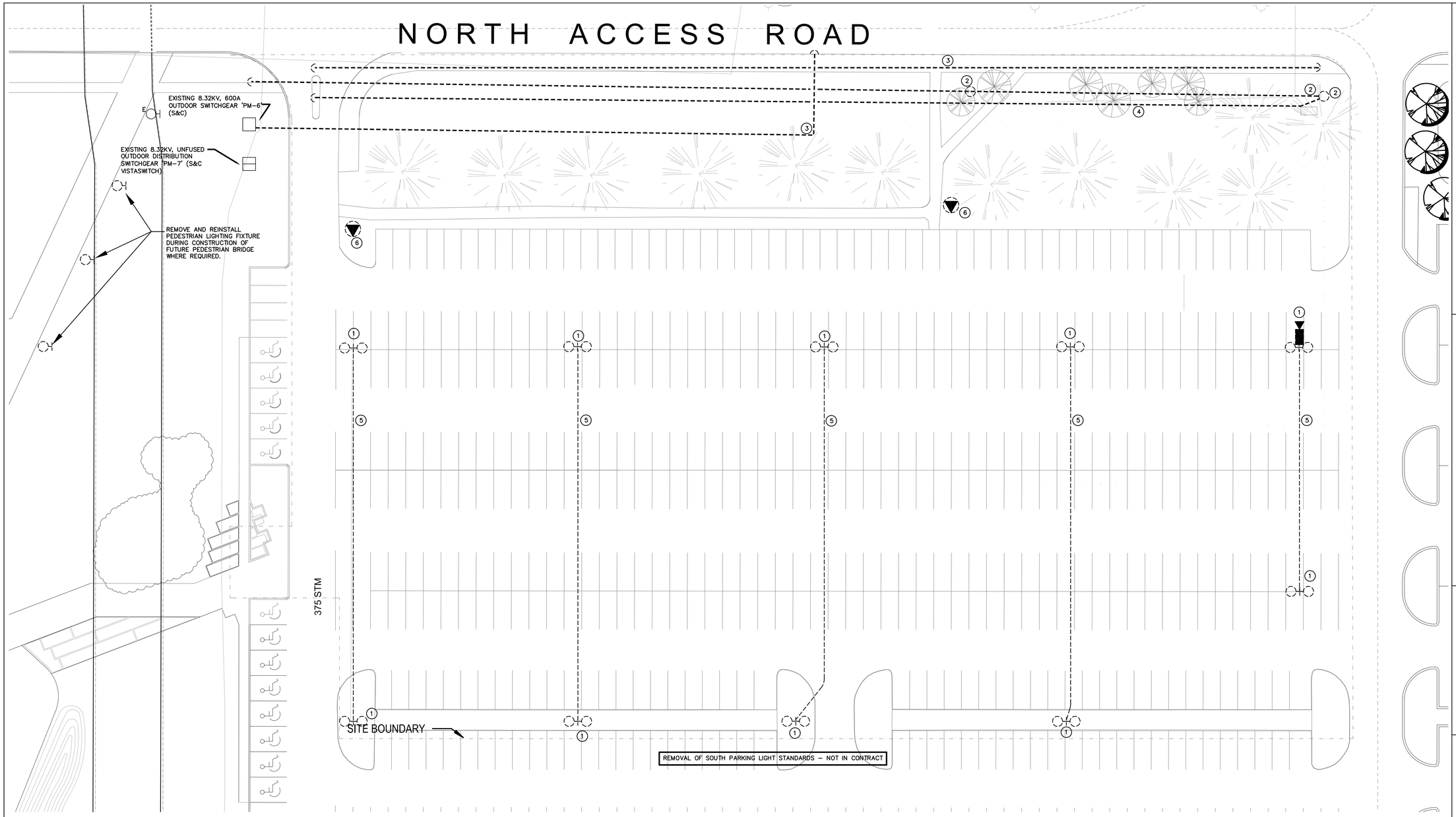

1 ED001 ELECTRICAL SITE PLAN - DEMOLITION
1:300

KEYED NOTES:

1. REMOVE EXISTING LIGHT STANDARD INCLUDING ASSOCIATED LUMINAIRE, POLE, CONCRETE BOLLARD, CONDUIT AND BRANCH WIRING. MAINTAIN CONTINUITY OF DOWNSTREAM LIGHT STANDARDS THAT ARE EXISTING TO REMAIN WHICH MAY BE FED FROM SAME CIRCUIT AND INCLUDE FOR REWORK OF EXISTING SITE LIGHTING CIRCUITRY AND BRANCH DISTRIBUTION. TURN OVER LUMINAIRE AND POLE TO ALGONQUIN COLLEGE FOR FUTURE REUSE.
2. REMOVE EXISTING HYDRO POLES INCLUDING ASSOCIATED WOODEN POLES, 8.32 KV POWER LINES, POLE MOUNTED TRANSFORMERS, BELL/ROGERS TELECOMMUNICATION CABLING AND MAKE SAFE. COORDINATE WORK WITH ALGONQUIN COLLEGE AND HYDRO OTTAWA.
3. REMOVE EXISTING BURIED ELECTRICAL SERVICES INCLUDING AND REROUTE TO ACCOMMODATE THE INSTALLATION OF NEW ELECTRICAL SITE SERVICES. COORDINATE WORK WITH ALGONQUIN COLLEGE AND HYDRO OTTAWA.
4. REMOVE EXISTING BURIED TELECOMMUNICATION SERVICES INCLUDING BELL/ROGERS AND REROUTE TO ACCOMMODATE THE INSTALLATION OF NEW ELECTRICAL SITE SERVICES. COORDINATE WORK WITH ALGONQUIN COLLEGE AND TELECOMMUNICATION SERVICE PROVIDER.
5. REMOVE EXISTING BURIED PARKING LIGHTING BRANCH FEEDERS AND MODIFY BURIED ELECTRICAL SERVICES AS REQUIRED TO MAINTAIN DOWNSTREAM CONTINUITY OF OTHER PARKING LIGHTING CIRCUITS. RETAIN EXISTING PARKING LIGHTING CIRCUITRY AND EXTEND TO NEW PARKING LIGHTING LOCATIONS.
6. REMOVE PARKING PAY STATION POWER, FEEDERS, AND TELECOMMUNICATION CONDUIT INFRASTRUCTURE TO ACCOMMODATE NEW BUILDING LOCATION. TURN OVER PAY STATIONS TO ALGONQUIN COLLEGE FOR FUTURE REUSE.

SITE VERIFY EXISTING ELECTRICAL AND TELECOMMUNICATION SERVICES WHICH MAY INTERFERE WITH THE CONSTRUCTION OF THE NEW BUILDING. COORDINATE WITH OTHER SITE SERVICES AND REROUTE/REINSTATE ACCORDINGLY. REVIEW ALL WORK WITH ALGONQUIN COLLEGE PRIOR TO COMMENCEMENT.

APPROVED
By Mark Young at 3:09 pm, Jan 10, 2020

MARK YOUNG, MCIP, RPP
(A) MANAGER, DEVELOPMENT REVIEW - WEST
PLANNING, INFRASTRUCTURE & ECONOMIC DEVELOPMENT DEPARTMENT, CITY OF OTTAWA

ALGONQUIN COLLEGE

Algonquin Students' ASSOCIATION

Project
ATHLETICS AND RECREATION CENTRE (ARC)

Prepared For
ALGONQUIN STUDENTS' ASSOCIATION

HOK Architects Corporation
205 Catherine Street, Suite 101
Ottawa, Ontario K2P 1C3 Canada
t +1 613 226 9650 f +1 613 226 9656

All reproduction & intellectual property rights reserved © 2019

In Association with

WSP
STRUCTURAL
2611 Queensview Drive, Suite 300
Ottawa, ON, K2B 8K2

WSP
MECHANICAL
2611 Queensview Drive, Suite 300
Ottawa, ON, K2B 8K2

WSP
ELECTRICAL
2611 Queensview Drive, Suite 300
Ottawa, ON, K2B 8K2

WSP
CIVIL
2611 Queensview Drive, Suite 300
Ottawa, ON, K2B 8K2

CSW Landscape Architects
LANDSCAPE
319 McRae Avenue, Suite 502
Ottawa, ON, K1Z 0B9

WSP
SUSTAINABILITY
2611 Queensview Drive, Suite 300
Ottawa, ON, K2B 8K2

Key Plan

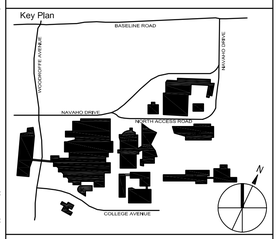

Professional Seals

LICENSED PROFESSIONAL ENGINEER
2019-09-24
191-01517-00
D. BADAOUI
100159630
PROVINCE OF ONTARIO

No.	Description	Date
1	ISSUED FOR SITE PLAN APPROVAL	2019/06/24
2	ISSUED FOR FOUNDATION PERMIT	2019/08/20
3	RE-ISSUED FOR SITE PLAN APPROVAL	2019/09/24

Drawn by: J.A. Reviewed by: D.B.
Project No: 191-01517-00

Sheet Title
ELECTRICAL SITE PLAN - DEMOLITION

Original drawing is A1. Do not scale contents of this drawing.

Sheet Number
ED001

2019-09-12 3:57:33 PM

D07-12-19-0114

#17981

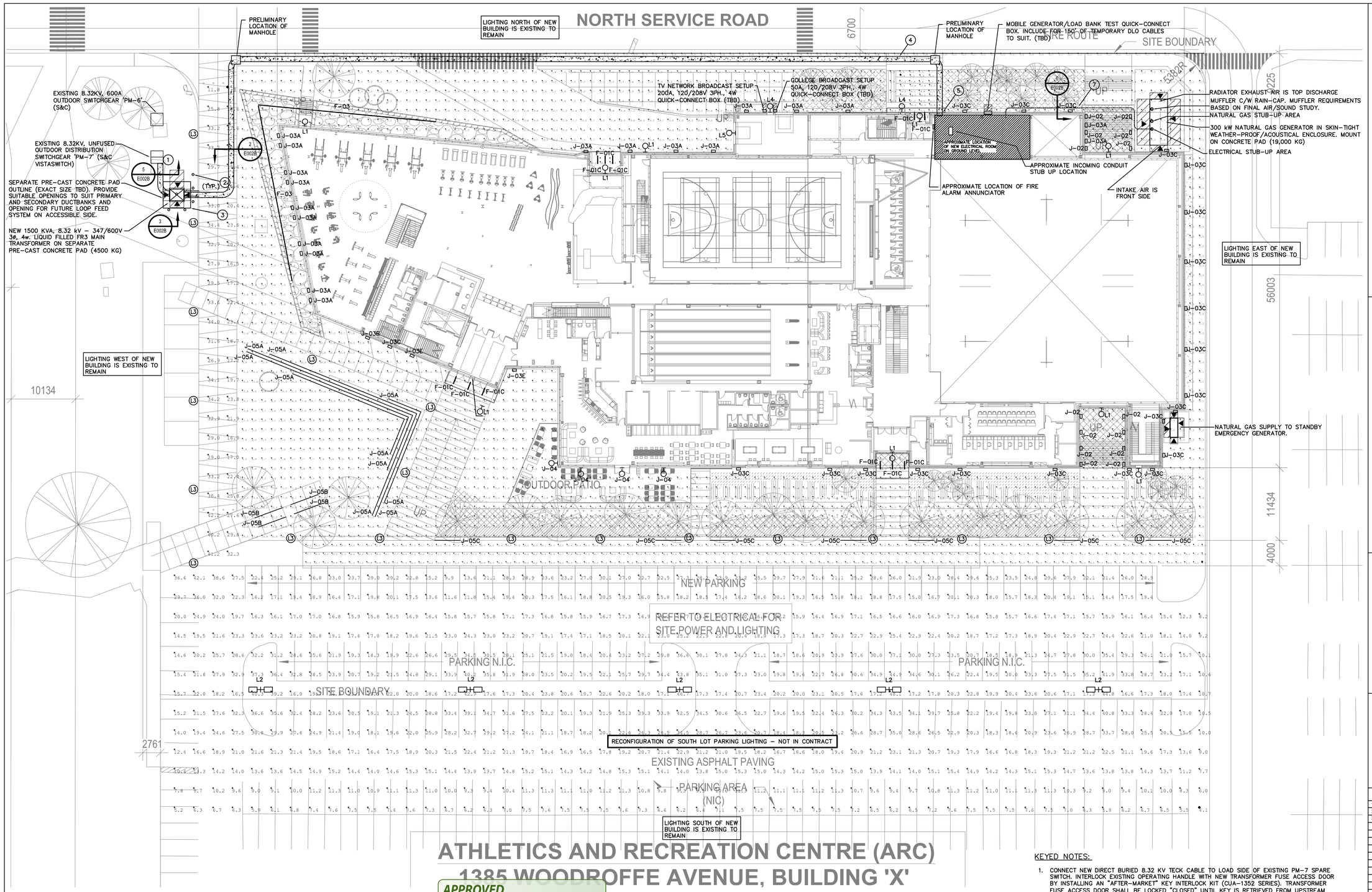

ATHLETICS AND RECREATION CENTRE (ARC)
1385 WOODROFFE AVENUE, BUILDING 'X'

1 / E002A — ELECTRICAL SITE PLAN - NEW WORK

1:300

APPROVED
By Mark Young at 3:09 pm, Jan 10, 2020

MARK YOUNG, MCIP, RPP
(A) MANAGER, DEVELOPMENT REVIEW - WEST
PLANNING, INFRASTRUCTURE & ECONOMIC DEVELOPMENT DEPARTMENT, CITY OF OTTAWA

MEASURING POINTS AND LIGHTING LEVELS (PHOTOMETRIC DATA) IDENTIFIED ON THIS DRAWING ASSOCIATED WITH LIGHT FIXTURE TYPES: L1 - L5 ONLY. REFER TO WSP LIGHTING FIXTURE SCHEDULE ON DRAWING E002B FOR DETAILS.

MEASURING POINTS AND LIGHTING LEVELS (PHOTOMETRIC DATA) FOR DECORATIVE/LANDSCAPE LIGHT FIXTURE TYPES: F-01C F-03, J-02, J-03A, J-03B, J-03C, J-03E J-04, J-05A, J-05B AND J-05C ARE NOT IDENTIFIED ON THIS DRAWING. LIGHT FIXTURE LOCATIONS, MOUNTING DETAIL AND PHOTOMETRIC DATA PROVIDED BY MCLD. REFER TO MCLD LIGHTING FIXTURE SCHEDULE ON DRAWING E002C FOR DETAILS. LIGHT FIXTURES TO BE CONTROLLED BY PROGRAMMABLE LIGHTING CONTROL SYSTEM AND TO BE 'OFF' FROM 12AM TO 6AM.

SITE VERIFY EXISTING ELECTRICAL AND TELECOMMUNICATION SERVICES WHICH MAY INTERFERE WITH THE CONSTRUCTION OF THE NEW BUILDING. COORDINATE WITH OTHER SITE SERVICES AND REROUTE/REINSTATE ACCORDINGLY. REVIEW ALL WORK WITH ALGONQUIN COLLEGE PRIOR TO COMMENCEMENT.

KEYED NOTES:

1. CONNECT NEW DIRECT BURIED 8.32 KV TECK CABLE TO LOAD SIDE OF EXISTING PM-7 SPARE SWITCH. INTERLOCK EXISTING OPERATING HANDLE WITH NEW TRANSFORMER FUSE ACCESS DOOR BY INSTALLING AN "AFTER-MARKET" KEY INTERLOCK KIT (CUA-1352 SERIES). TRANSFORMER FUSE ACCESS DOOR SHALL BE LOCKED "CLOSED" UNTIL KEY IS RETRIEVED FROM UPSTREAM SWITCH BY ENSURING THE VISTA SWITCH IS LOCKED "GROUNDED" OR "OPEN".
2. PROVIDE SUITABLE CONCRETE-BASED PROTECTIVE BOLLARDS.
3. PROVIDE BURIED GROUNDING LOOP/GRID AROUND NEW TRANSFORMER CONCRETE PAD C/W MINIMUM FOUR (4) GROUNDING RODS AND CONNECT WITH MINIMUM 3/O STRANDED BARE COPPER AND TERMINATE IN TRANSFORMER HO/XO GROUNDING BAR/LUGS. BOND TO METALLIC OBJECTS NEARBY INCLUDING PROTECTIVE BOLLARDS.
4. SECONDARY CONCRETE ENCASED DUCT BANK TO BE ROUTED UNDER PEDESTRIAN SIDEWALK. COORDINATE EXACT ROUTING WITH EXISTING SERVICES. DUCT BANK IS A LONG RUN, PROVIDE PRE-CAST PULLING CHAMBER(S) WITH MANHOLE(S) LOCATED TO FACILITATE THE CABLE PULL.
5. TRANSITION CONDUITS FROM INCOMING DUCT BANK AND EMBED IN FLOOR SLAB TO STUB-UP INTO MAIN ENTRANCE SWITCHBOARD. WHERE CONDUITS ENTER BELOW SLAB AND INTO BASEMENT LEVEL, EXTEND CONCRETE ENCASEMENT INTO MAIN ELECTRICAL ROOM. ENSURE CONDUIT STUB-UP IS METALLIC. COORDINATE INSTALLATION OF INCOMING ELECTRICAL SERVICE DUCT BANK WITH THE BUILDING FOUNDATION AND GENERAL CONTRACTOR PRIOR TO ROUGH-IN.
6. RETAIN EXISTING PARKING LIGHTING CIRCUITS USED BY NORTH PARKING LOT LIGHT STANDARDS THAT WERE REMOVED AND EXTEND TO NEW PARKING LIGHTING LOCATIONS.
7. APPROXIMATE ROUTING OF ELECTRICAL SERVICES BETWEEN GENERATOR AND MAIN ELECTRICAL ROOM

ALGONQUIN COLLEGE

Algonquin Students' ASSOCIATION

Project
ATHLETICS AND RECREATION CENTRE (ARC)

Prepared For
ALGONQUIN STUDENTS' ASSOCIATION

HOK Architects Corporation
205 Catherine Street, Suite 101
Ottawa, Ontario K2P 1C3 Canada
t +1 613 226 9650 f +1 613 226 9656

All reproduction & intellectual property rights reserved © 2019

In Association with

WSP
STRUCTURAL
2611 Queensview Drive, Suite 300
Ottawa, ON, K2B 8K2

WSP
MECHANICAL
2611 Queensview Drive, Suite 300
Ottawa, ON, K2B 8K2

WSP
ELECTRICAL
2611 Queensview Drive, Suite 300
Ottawa, ON, K2B 8K2

WSP
CIVIL
2611 Queensview Drive, Suite 300
Ottawa, ON, K2B 8K2

CSW Landscape Architects
LANDSCAPE
319 McRae Avenue, Suite 502
Ottawa, ON, K1Z 0B9

WSP
SUSTAINABILITY
2611 Queensview Drive, Suite 300
Ottawa, ON, K2B 8K2

Key Plan

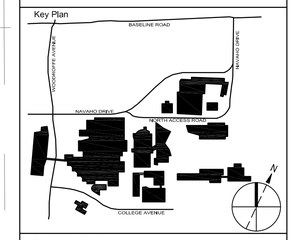

Professional Seals

LICENSED PROFESSIONAL ENGINEER
2019-09-24
191-01517-00
D. BADAOUI
100159630
PROVINCE OF ONTARIO

No.	Description	Date
1	ISSUED FOR SITE PLAN APPROVAL	2019/06/24
2	ISSUED FOR FOUNDATION PERMIT	2019/08/20
3	RE-ISSUED FOR SITE PLAN APPROVAL	2019/09/24

Drawn by: J.A. Reviewed by: D.B.
Project No: 191-01517-00

Sheet Title
ELECTRICAL SITE PLAN - NEW WORK

Original drawing is A1. Do not scale contents of this drawing.

Sheet Number
E002A

2019-09-12 3:57:33 PM

D07-12-19-0114

#17981

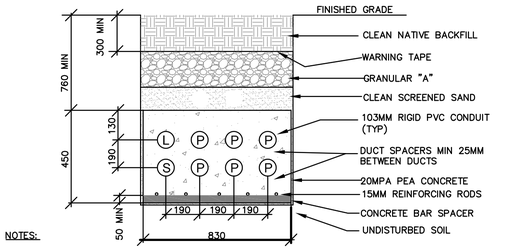

NOTES:

1. ALL TRENCHING AND BACKFILLING BY GENERAL CONTRACTOR. CONCRETE DUCT BANK AND ASSOCIATED CONDUIT WORK BY ELECTRICAL CONTRACTOR. COORDINATE ROUTING AND INSTALLATION WITH ALL OTHER UNDERGROUND SERVICES PRIOR TO INSTALLATION ON SITE.

LEGEND:

P – POWER

L – LOW VOLTAGE/CONTROLS

S – SPARE

2 SECONDARYY DUCTBANK SECTION

E002B N.T.S.

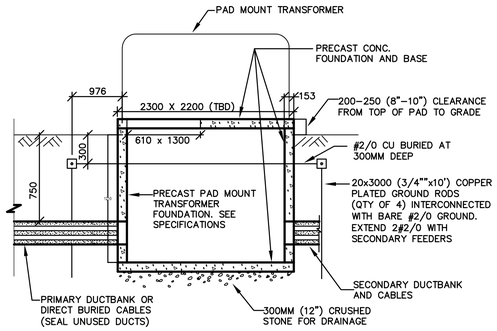

3 PADMOUNT TRANSFORMER DETAIL

E002B N.T.S.

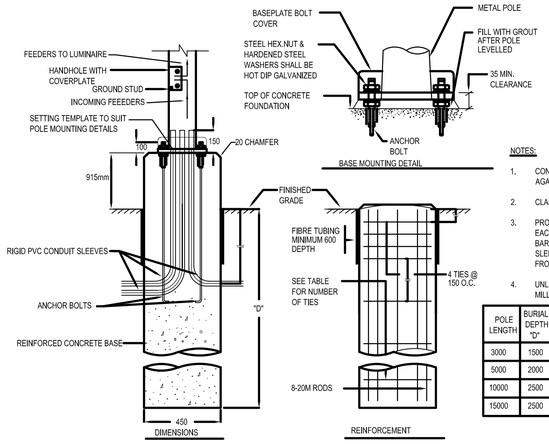

NOTES:

1. CONCRETE IN FOUNDATION SHALL BE PLACED AGAINST UNDISTURBED GROUND.
2. CLASS OF CONCRETE TO BE 20 MPa.
3. PROVIDE A 19x3000 GROUND ROD ADJACENT TO EACH POLE AND CONNECT TO METAL POLE WITH BARE #6 AWG COPPER CONDUCTOR. PROVIDE SLEEVE IN CONCRETE BASE FOR GROUND WIRE FROM GROUND ROD.
4. UNLESS OTHERWISE NOTED, DIMENSIONS ARE IN MILLIMETERS.

POLE LENGTH	BURIAL DEPTH "D"	LENGTH OF VERT. REINFOR. CEMENT	NO. OF TIES	ANCHOR BOLT LENGTH
			150 DIA. O.C.	
3000	1500	1300	3	900
5000	2000	1800	6	1200
10000	2500	2300	9	1200
15000	2500	2300	9	1200

4 LIGHTING STANDARD DETAIL

E002B N.T.S.

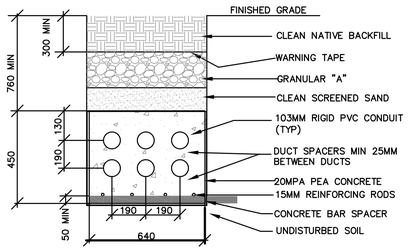

NOTES:

1. ALL TRENCHING AND BACKFILLING BY GENERAL CONTRACTOR. CONCRETE DUCT BANK AND ASSOCIATED CONDUIT WORK BY ELECTRICAL CONTRACTOR. COORDINATE ROUTING AND INSTALLATION WITH ALL OTHER UNDERGROUND SERVICES PRIOR TO INSTALLATION ON SITE.

5 PRIMARY DUCTBANK DETAIL

E002B N.T.S.

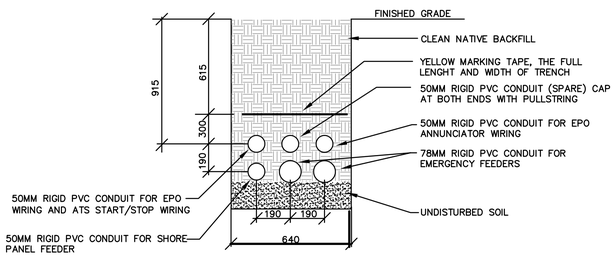

NOTES:

1. ALL TRENCHING AND BACKFILLING BY GENERAL CONTRACTOR. CONCRETE DUCT BANK AND ASSOCIATED CONDUIT WORK BY ELECTRICAL CONTRACTOR. COORDINATE ROUTING AND INSTALLATION WITH ALL OTHER UNDERGROUND SERVICES PRIOR TO INSTALLATION ON SITE.

6 DIRECT BURIED CONDUITS BETWEEN GENERATOR RM AND MAIN ELECTRICAL ROOM

E002B N.T.S.

WSP LIGHTING FIXTURE SCHEDULE

TYPE	MANUFACTURER/MODEL NUMBER	DESCRIPTION	LAMP	WATTAGE	LUMENS	VOLTAGE	COLOUR TEMP CRI	MOUNTING	TYPE	IES DISTRIBUTION	EFFICIENCY	SHIELDING	REFLECTOR	HOUSING	FINISH	BALLAST	DIMENSION	NOTES	REMARKS
L1	SELUX U4 SERIES U4-R3-WD-5G530-40-BK-347-GL SERIES	WALL PACK	LED	28W (TBD)	2811	347	4000K/CRI > 80 (TBD)	SURFACE FACADE @ 10 FEET	DOWNLIGHT	WIDE (TYPE III)	TBD%	TBD	TBD	LOW COPPER MARINE-GRADE ALUMINUM	BLACK - CONFIRM WITH ARCHITECT	INTEGRAL 347V LED DRIVER,	(230mm W X 413mm D)	CUL/CSA LISTED 5YRS WARRANTY ON LED DRIVER AND FIXTURE	-
L2	SELUX U6 SERIES U6-R3-S2-5G700-40-BK-347-GL SERIES	LIGHT STANDARD (BACK TO BACK)	LED	148W (TBD)	15145	347	4000K/CRI > 80 (TBD)	POLE @ 33 FEET	DOWNLIGHT	WIDE (TYPE III)	TBD%	TBD	TBD	LOW COPPER MARINE-GRADE ALUMINUM	BLACK - CONFIRM WITH ARCHITECT	INTEGRAL 347V LED DRIVER,	(350mm W X 613mm D) FOR EACH HEAD	- CUL/CSA LISTED - 5YRS WARRANTY ON LED DRIVER AND FIXTURE - PROVIDE SUITABLE POLE (TBD)	30' POLE C/W 3' CONCRETE BASE
L3	SELUX MISTELLA MST-R5S-1-5G700-40	LIGHT STANDARD	LED	64W (TBD)	6747	347	4000K/CRI > 80 (TBD)	POLE @ 14 FEET	DOWNLIGHT	SQUARE TYPE V	TBD%	TBD	TBD		BLACK - CONFIRM WITH ARCHITECT	INTEGRAL 347V LED DRIVER,			12' POLE
L4	SELUX U4 SERIES U4-R2-5G350-40-GL	WALL PACK	LED	19W	1935	347	4000K/CRI > 80 (TBD)	SURFACE FACADE @ 10 FEET	DOWNLIGHT	WIDE (TYPE III)	TBD%	TBD	TBD	LOW COPPER MARINE-GRADE ALUMINUM	BLACK - CONFIRM WITH ARCHITECT	INTEGRAL 347V LED DRIVER,	(230mm W X 413mm D)	CUL/CSA LISTED 5YRS WARRANTY ON LED DRIVER AND FIXTURE	-
L5	SELUX U4 SERIES U4-R4-5G530-40-GL	WALL PACK	LED	28W	2745	347	4000K/CRI > 80 (TBD)	SURFACE FACADE @ 16 FEET	DOWNLIGHT	WIDE (TYPE III)	TBD%	TBD	TBD	LOW COPPER MARINE-GRADE ALUMINUM	BLACK - CONFIRM WITH ARCHITECT	INTEGRAL 347V LED DRIVER,	(230mm W X 413mm D)	CUL/CSA LISTED 5YRS WARRANTY ON LED DRIVER AND FIXTURE	-

COORDINATE EXACT LOCATION AND MOUNTING METHOD WITH ARCHITECTURAL AND MCLD DRAWINGS, PROVIDE ALL REQUIRED MOUNTING ACCESSORIES.

Calculation Summary							
Label	CalcType	Units	Avg	Max	Min	Avg/Min	Max/Min
Drive Lane	Illuminance	Lux	26.34	42.2	7.3	3.61	5.78
Parking	Illuminance	Lux	19.81	48.1	4.1	4.83	11.73
Parking Sidewalk	Illuminance	Lux	33.31	41.6	6.5	5.12	6.40
Site Boundary Line - Horizontal @ Grade	Illuminance	Lux	0.27	0.6	0.0	N.A.	N.A.
Site Boundary Line - Vertical Values	Illuminance	Lux	0.35	2.0	0.0	N.A.	N.A.
Zone1	Illuminance	Lux	30.87	65.4	6.5	4.75	10.06
Zone2	Illuminance	Lux	34.34	47.5	20.2	1.70	2.35
Zone3	Illuminance	Lux	25.22	58.4	3.8	6.64	15.37
Zone4	Illuminance	Lux	28.59	49.7	3.6	7.94	13.81
Zone5	Illuminance	Lux	14.44	44.3	0.3	48.13	147.67
Zone6	Illuminance	Lux	13.76	45.6	0.1	137.60	456.00
Zone7	Illuminance	Lux	16.85	45.7	2.4	7.02	19.04
Zone8	Illuminance	Lux	21.39	46.1	11.0	1.94	4.19

NOTE: LIGHTING ZONE IS BEING CLASSIFIED AS LZ3 REFERENCING MODEL LIGHTING ORDINANCE (MLO) USER GUIDE. LUMINAIRES NOTED ARE DARK SKY COMPLIANT AND FULL CUT-OFF WITH NO UP-LIGHTING.

1 LUMINAIRE SCHEDULE AND PHOTOMETRICS

E002B N.T.S.

APPROVED
By Mark Young at 3:10 pm, Jan 10, 2020

MARK YOUNG, MCIP, RPP
(A) MANAGER, DEVELOPMENT REVIEW - WEST
PLANNING, INFRASTRUCTURE & ECONOMIC DEVELOPMENT DEPARTMENT, CITY OF OTTAWA

ALGONQUIN COLLEGE

Algonquin Students' ASSOCIATION

Project
ATHLETICS AND RECREATION CENTRE (ARC)

Prepared For
ALGONQUIN STUDENTS' ASSOCIATION

HOK Architects Corporation
205 Catherine Street, Suite 101
Ottawa, Ontario K2P 1C3 Canada
t +1 613 226 9650 f +1 613 226 9656

All reproduction & intellectual property rights reserved © 2019

In Association with

WSP
STRUCTURAL
2611 Queensview Drive, Suite 300
Ottawa, ON, K2B 8K2

WSP
MECHANICAL
2611 Queensview Drive, Suite 300
Ottawa, ON, K2B 8K2

WSP
ELECTRICAL
2611 Queensview Drive, Suite 300
Ottawa, ON, K2B 8K2

WSP
CIVIL
2611 Queensview Drive, Suite 300
Ottawa, ON, K2B 8K2

CSW Landscape Architects
LANDSCAPE
319 McRae Avenue, Suite 502
Ottawa, ON, K1Z 0B9

WSP
SUSTAINABILITY
2611 Queensview Drive, Suite 300
Ottawa, ON, K2B 8K2

Key Plan

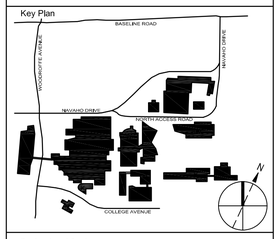

Professional Seals

LICENSED PROFESSIONAL ENGINEER
2019-09-24
191-01517-00
D. BADAOUI
100159630
PROVINCE OF ONTARIO

No.	Description	Date
1	ISSUED FOR SITE PLAN APPROVAL	2019/06/24
2	ISSUED FOR FOUNDATION PERMIT	2019/08/20
3	RE-ISSUED FOR SITE PLAN APPROVAL	2019/09/24

Drawn by: J.A. Reviewed by: D.B.
Project No: 191-01517-00

Sheet Title
ELECTRICAL SITE PLAN DETAILS AND PHOTOMETRICS

Original drawing is A1. Do not scale contents of this drawing.

Sheet Number
E002B

2019-09-12 3:57:33 PM

D07-12-19-0114

#17981

Algonquin ARC
Exterior LEED fixture schedule
Note: Exempt fixtures not shown

Date: September 20, 2019

MCLD

95 Goulburn Ave, Ottawa, ON K1N 8C9

All fixture LED unless noted otherwise | **All fixtures 120V feed unless noted otherwise**

TYPE	DESCRIPTION	LOCATION(S)	MANUFACTURER/CATALOG NUMBER	Qty/ft*	SOURCE DETAILS WATTS	TYPE	Dimming	Lumens	K	Beam Angle	CCT	Height	BUG Rating (where listed)	Comments
	EXTERIOR CANOPY/ WALL MOUNTED													
F-01C	4" Recessed Linear Wet Location 4'	Etrance Canopies	Acuity Slot 4 LED SL4L 4FT FLP xx 80CRI 40K 600LMF MIN1 120 ZT WL	12	24	LED	0-10v	2400	4000		4000	~3.5m	B1-U0-G1	Fixtures oriented downwards Fixtures located over center of pathway and near building face BUG rating has been calculated based on zonal lumen output. BUG rating to be confirmed by manufacturer North canopy fixtures to be switched off between 12:00am- 6:00am 347V feed
J-04	20" Industrial Pendant with 20" wall mounting arm	Affixed to building wall at Patio	ANP Lighting Bella Vista BVF2001 P078LD4 D T3 30K WM3203 41	4	80	LED	0-10v	7041	3000	Type III	3000	~3.4m	B2-U0-G2	
J-02	Step Light	North East and South East stairs to gymnasium	Bega 24 065 K4 SLV	14	8.7	LED	0-10v	580	4000		4000	457mm (18") AFF	B0-U2-G2	~2500mm spacing (~8ft) Fixtures to be turned off at 12:00am- 6:00pm.
F-03	2" Recessed Linear Wet Location 92' Run	Exterior Overhang Soffit North-West Corner	Acuity Slot 2 LED SL2L LOP 92FT FLP xx 80CRI 40K 400LMF MIN1 120 ZT WL	2	4/ft	LED	0-10v	400/ft	4000		4000	~5m	B2-U0-G2	Fixtures oriented downwards Fixtures located over center of pathway and near building face Fixture to be turned off at 12:00am- 6:00pm. IES data is based on a 4' run length. Fixture runs to be composed of 8' segments. BUG rataing has been calculated per 8' run. BUG rating to be confirmed by manufacturer 347V feed
F-01M	4" Recessed Linear Wet Locations - Various lengths	Fitness Balcony Canopy	Acuity Slot 4 LED SL4L LOP xx FLP xx 80CRI 40K 600LMF MIN1 120 ZT WL	~124ft	6/ft	LED	0-10v	600/ft	4000		4000	~5.2m	B2-U0-G2	Fixtures oriented downwards Fixtures located over center of pathway and near building face Mounting height is from canopy to balcony floor Fixtures to be dimmed after operating hours IES data is based on a 4' run length. Fixture runs to be composed of 8' segments. BUG rataing has been calculated per 8' run. BUG rating to be confirmed by manufacturer 347V feed
J-03A	16' Linear	Sun shades West curtain wall	LED Linear Venus TV VarioLED Flex PHOBOS W8 30 5000 TV IP67	3.1/ft	LED	0-10v	182/ft	4000						Mounting details TBD Price includes one driver (CV60L24DC) per unit Fixture to be turned off from midnight to 6:00AM for LEED compliance
J-03B	12' Linear		LED Linear Venus TV VarioLED Flex PHOBOS W8 30 3750 TV IP67	3.1/ft	LED	0-10v	182/ft	4000						Mounting details TBD Price includes one driver (CV60L24DC) per unit Fixture to be turned off from midnight to 6:00AM for LEED compliance
J-03C	8' Linear		LED Linear Venus TV VarioLED Flex PHOBOS W8 30 2500 TV IP67	3.1/ft	LED	0-10v	182/ft	4000						Mounting details TBD Price includes one driver (CV60L24DC) per unit Fixture to be turned off from midnight to 6:00AM for LEED compliance
J-03E	4' Linear		LED Linear Venus TV VarioLED Flex PHOBOS W8 30 1250 TV IP67	3.1/ft	LED	0-10v	182/ft	4000						Mounting details TBD Price includes one driver for all three units Fixture to be turned off from midnight to 6:00AM for LEED compliance
J-04	20" Industrial Pendant with 20" wall mounting arm	Patio affixed to building wall	ANP Lighting Bella Vista BVF2001 P078LD4 D T3 30K WM3203 41	80		LED	0-10v	7041	3000					Finish to be confirmed 3.5m mounting height Fixtures not shown on exterior elevations; see L1 RCP West Fixture is LEED compliant and can b left on past midnight
J-05A	Flexible linear - various lengths	Terraces	LED Linear Venus TV VarioLED Flex PHOBOS W8 30 xx TV IP67	3.1/ft	LED	0-10v	182/ft	3000						Final run lenngths and mounting details pending coordination with HoK and CSW (landscape) Fixture to be turned off from midnight to 6:00AM for LEED compliance
J-05B	Flexible Linear- 5m	Harvest Tables	LED Linear Venus TV VarioLED Flex PHOBOS W8 25 5000mm TV IP67	3.1/ft	LED	0-10v	182/ft	3000						mounting details pending coordination with HoK and CSW Price includes one driver (CV60L24DC) per unit Fixture to be turned off from midnight to 6:00AM for LEED compliance
J-05C	Flexible Linear- 4m	Under Benches	LED Linear Venus TV VarioLED Flex PHOBOS W8 25 4000mm TV IP67	3.1/ft	LED	0-10v	182/ft	3000						mounting details pending coordination with HoK and CSW Price includes one driver (CV60L24DC) per unit Fixture to be turned off from midnight to 6:00AM for LEED compliance

APPROVED
By Mark Young at 3:10 pm, Jan 10, 2020

MARK YOUNG, MCIP, RPP
(A) MANAGER, DEVELOPMENT REVIEW - WEST
PLANNING, INFRASTRUCTURE & ECONOMIC
DEVELOPMENT DEPARTMENT, CITY OF OTTAWA

1 / E002C — MCLD LIGHTING FIXTURE SCHEDULE
N.T.S.

ALGONQUIN COLLEGE
Algonquin Students' ASSOCIATION

Project
ATHLETICS AND RECREATION CENTRE (ARC)

Prepared For
ALGONQUIN STUDENTS' ASSOCIATION

HOK Architects Corporation
205 Catherine Street, Suite 101
Ottawa, Ontario K2P 1C3 Canada
t +1 613 226 9650 f +1 613 226 9656

All reproduction & intellectual property rights reserved © 2019

In Association with

WSP
STRUCTURAL
2611 Queensview Drive, Suite 300
Ottawa, ON, K2B 8K2

WSP
MECHANICAL
2611 Queensview Drive, Suite 300
Ottawa, ON, K2B 8K2

WSP
ELECTRICAL
2611 Queensview Drive, Suite 300
Ottawa, ON, K2B 8K2

WSP
CIVIL
2611 Queensview Drive, Suite 300
Ottawa, ON, K2B 8K2

CSW Landscape Architects
LANDSCAPE
319 McRae Avenue, Suite 502
Ottawa, ON, K1Z 0B9

WSP
SUSTAINABILITY
2611 Queensview Drive, Suite 300
Ottawa, ON, K2B 8K2

Key Plan

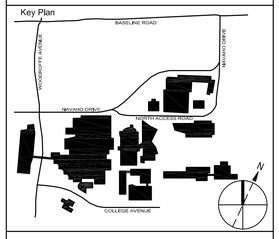

Professional Seals

LICENSED PROFESSIONAL ENGINEER
2019-09-24
191-01517-00
D. BADAOUI
100159630
PROVINCE OF ONTARIO

No.	Description	Date
1	ISSUED FOR SITE PLAN APPROVAL	2019/06/24
2	ISSUED FOR FOUNDATION PERMIT	2019/08/20
3	RE-ISSUED FOR SITE PLAN APPROVAL	2019/09/24

Drawn by: J.A. Reviewed by: D.B.
Project No: 191-01517-00

Sheet Title
ELECTRICAL
MCLD LIGHTING
FIXTURE SCHEDULE

Original drawing is A1. Do not scale contents of this drawing.

Sheet Number
E002C

2019-09-12 3:57:33 PM

D07-12-19-0114

#17981