120 Iber Road, Unit 103
Stittsville, Ontario K2S 1E9
Tel (613) 836-0856
Fax (613) 836-7183
www.dsel.ca

SITE SERVICING AND STORMWATER MANAGEMENT BRIEF

DATE: 2018-09-24 *EMAIL*

TO: **City of Ottawa IAD Review Officer**

SUBJECT: **Proposed Amendment to 5754 Hazeldean Road/ 24 Iber Road/ 5734 Hazeldean Road Site Plan Application**
Previously Approved City File Number: D07-12-17-0186

OUR FILE: DSEL Project No.19-1133

ATTACHMENTS:

- Site Plan, SP-1, by Hobin Architecture, Dated August 29th, 2019 (Proposed Amendment)
- Site Plan, SP-1, by Hobin Architecture, Dated March 8th, 2019 (Previously Approved)
- Storm Calculation Sheet, by DSEL, Dated March 27th, 2018 (Previously Approved)
- Stormwater Management Plan, SWM-1, by DSEL, Dated Sept20th, 2019 (Proposed Amendment)
- Storm Calculation Sheet, by DSEL, Dated September 2019 (Proposed Amendment)
- Triton Stormwater Solutions Sizing Specifications, printed September 20th, 2019
- Water Demand Calculation Sheet, by DSEL, Dated March 27th, 2019 (Previously Approved)
- Water Demand Calculation Sheet, by DSEL, Dated Sept 20th 2019 (Proposed Amendment)
- City of Ottawa Boundary Conditions Dated March 7rd, 2018
- Wastewater Calculation Sheet, by DSEL, Dated March 28th, 2019 (Previously Approved)
- Wastewater Calculation Sheet, by DSEL, Dated Sept 20th, 2019 (Proposed Amendment)

1.0 INTRODUCTION

Unity Square Limited Partnership has retained DSEL to prepare a servicing memo in support of the proposed amendment to the previously approved site plan application for the subject site located at 5754 Hazeldean Road, 24 Iber Road, 5734 Hazeldean Road (D07-12-17-0186). Please see proposed amended site plan (***SP-1***) dated August 29th, 2019, included along with this memo.

The following memo addresses the impact of the updated site plan on the previously approved Functional Servicing and Stormwater Management brief (***FSB, 2019***) prepared by David Schaeffer Engineering Ltd and dated July 17th, 2019.

The previously approved Site Plan proposed ***10,690 m²*** of commercial space. The updated Site Plan proposes a decrease in building area as a result of the revised Building D design. The total commercial space for the amended development is ***10,337 m²***, a reduction of approximately ***353 m²***.

Based on the previously approved Site Servicing Plan, ***SSP-1***, dated July 17th, 2019, the development was proposed to be serviced via the existing sewers and watermain within the Iber Road right-of-way and the existing watermain within the Fringewood Drive right-of-way. As shown by the revised Site Servicing Plan, ***SSP-1***, there are no proposed changes.

2.0 WATER SUPPLY SERVICING

FSB, 2019 proposed the design of a private 200 mm diameter internal watermain to service the development. The internal network is connected to both the 305 mm diameter watermain and 203 mm diameter watermain within Iber Road and Fringewood Drive, respectively. Building D was contemplated to connect to the internal watermain via a 150 mm diameter service lateral. As per ***SSP-1***, Building D will utilize the existing 150 mm diameter service stub. Refer to drawing ***SSP-1*** for a detailed servicing layout.

Table 1, below, summarizes the ***Water Supply Guidelines*** employed in the preparation of the preliminary water demand estimate.

Table 1 – Water Supply Design Criteria

Design Parameter	Value
Commercial Retail	2.5 L/m²/d
Commercial Maximum Daily Demand	1.5 x avg. day
Commercial Maximum Hour Demand	1.8 x max. day
Minimum Watermain Size	150 mm diameter
Minimum Depth of Cover	2.4 m from top of watermain to finished grade
During normal operating conditions desired operating pressure is within	350 kPa and 480 kPa
During normal operating conditions pressure must not drop below	275 kPa
During normal operating conditions pressure must not exceed	552 kPa
During fire flow operating pressure must not drop below	140 kPa

Daily average based on Appendix 4-A from **Water Supply Guidelines*
*** Residential Max. Daily and Max. Hourly peaking factors per MOE Guidelines for Drinking-Water Systems Table 3-3 for 0 to 500 persons.*
-Table updated to reflect ISD-2010-2

Table 2, below, summarizes the water supply demand and boundary conditions for the approved based on the ***Water Supply Guidelines***.

Table 2 – Previously Approved Water Demand and Boundary Conditions

Design Parameter	Approved Estimated Demand[1] (L/min)	Boundary Condition[2] Fringewood ($m\ H_2O$ / kPa)		Boundary Condition[2] Iber Rd ($m\ H_2O$ / kPa)	
Average Daily Demand	18.6	56.6	555.2	58.1	570.0
Max Day + Fire Flow	27.8 + 7,000 = 7,027.8	53.3	522.9	54.8	537.6
Peak Hour	50.1	54.5	534.6	55.8	547.4

1) Water demand calculation per ***Water Supply Guidelines***. See ***Appendix B*** for detailed calculations.
2) Boundary conditions supplied by the City of Ottawa for demands as indicated in correspondence. Assumed ground elevation: Fringewood Drive=104.5 m, Iber Road = 103.1 m. See ***Appendix B.***

As summarized in *Section 1.0*, the updated Site Plan results in a decrease in total commercial area. As a result, the previously approved water demand will be decreased by approximately ***3%,*** as shown by the water demand calculation sheet included in ***Appendix B***.

Table 3, below, summarizes the estimated water supply demand for the amended site plan.

Table 3 –Proposed Amended Water Demand Summary

Design Parameter	Proposed Estimated Demand[1] (L/min)
Average Daily Demand	17.9
Max Day + Fire Flow	26.9
Peak Hour	48.5

1) Water demand calculation per ***Water Supply Guidelines***. See ***Appendix*** for detailed calculations.

Fire flow requirements are to be determined in accordance with Local Guidelines (**ISDTB-2018-02**), City of Ottawa ***Water Supply Guidelines***, and the Ontario Building Code.

Using the Technical Bulletin **ISDTB-2018-02** method, a conservative estimation of fire flow had been established. As coordinated with the building architect, the following assumptions were made:

- Type of construction – Non-Combustible Construction
- Occupancy type – Non-Combustible
- Sprinkler Protection – Supervised Sprinkler System

As shown by ***Table 2,*** above, the maximum fire flow for the development was estimated to be ***7,000 L/s***. The previously approved fire flow for Building D was estimated to be ***4,000 L/s.*** Due to the reduction in floor area, the estimated fire flow demand for Building D has been reduced to ***2,000 L/s***. Detailed calculations can be found in ***Appendix B***.

The City provided both the anticipated minimum and maximum water pressures, as well as, the estimated water pressure during fire flow demand for the previously approved demands, as indicated by the correspondence in ***Appendix B***. The minimum and maximum pressures fall

within the required range identified in ***Table 1,*** above. As a result, the municipal system is capable of providing sufficient water supply during fire flow conditions.

Based on the updated Site Plan, the estimated water demand for the site decreased by approximately 3%. It is not anticipated to have a significant impact on the previously provided boundary conditions.

The previously approved EPAnet model was updated based on the proposed amended demands to ensure adequate pressure within the internal watermain network and at each building connection. As shown by the hydraulic modelling included in ***Appendix B***, the revised demands resulted in an insignificant change in pressure.

3.0 WASTEWATER SERVICING

FSB, 2019 proposed the design of a private 250 mm diameter internal sanitary sewer to service the development. The internal network is tributary to the newly extended 250 mm diameter sanitary sewer within Iber Road. Building D was contemplated to connect to the internal sewer via a 200 mm diameter service lateral. As per ***SSP-1***, Building D will utilize the existing 200 mm diameter service lateral stub. Refer to drawing ***SSP-1*** for a detailed servicing layout.

Based on ***FSB, 2019***, the internal sanitary sewer network has sufficient capacity to support the previously approved development. The private sewer network is tributary to the existing 250 mm diameter sewer within Iber road, which was sufficiently sized to accommodate the previously approved development.

Table 4, below, summarizes the ***City Standards*** employed in the design of the proposed wastewater sewer system for the previously approved and proposed amendment.

Table 4 – Wastewater Design Criteria

Design Parameter	Value
Commercial Floor Space	5 L/m^2/d
Infiltration and Inflow Allowance	0.05 L/s/ha (Dry) 0.28 L/s/ha (Wet) 0.33 L/s/ha (Total)
Sanitary sewers are to be sized employing the Manning's Equation	$Q = \frac{1}{n} A R^{2/3} S^{1/2}$
Minimum Sewer Size	200 mm diameter
Minimum Manning's 'n'	0.013
Minimum Depth of Cover	2.5 m from crown of sewer to grade
Minimum Full Flowing Velocity	0.6 m/s
Maximum Full Flowing Velocity	3.0 m/s
Extracted from Sections 4 and 6 of the City of Ottawa Sewer Design Guidelines, October 2012. **Revised design parameters outlined in Technical Bulletin ISTB-2018-01*	

Table 5, below, demonstrates the estimated peak flow from the previously approved development. Refer to ***Appendix C*** for associated calculations.

Table 5 – Previously Approved Wastewater Demand Summary

Design Parameter	Estimated Demand[1] (L/min)
Estimated Average Dry Weather Flow	1.46
Estimated Peak Dry Weather Flow	2.08
Estimated Peak Wet Weather Flow	3.32

Table 6, below, demonstrates the estimated peak flow from the proposed development. Refer to ***Appendix C*** for associated calculations.

Table 6 – Proposed Amendment Wastewater Demand Summary

Design Parameter	Estimated Demand[1] (L/min)
Estimated Average Dry Weather Flow	1.42
Estimated Peak Dry Weather Flow	2.02
Estimated Peak Wet Weather Flow	3.26

As demonstrated by ***Table 5*** and ***Table 6***, due to the reduction in commercial floor area the estimated wastewater flow for the proposed development has been reduced by approximately 3% from the previously approved wastewater flow. As a result, sufficient capacity is available within the internal private sanitary sewer as well as the 250 mm diameter sanitary sewer within Iber Road to accommodate the amended development.

4.0 STORMWATER MANAGEMENT

FSB, 2019 proposed the design of a private internal storm sewer to service the development. The internal network is tributary to the existing Hazeldean Tributary. Building D was contemplated to connect to the internal sewer via a 200 mm diameter service lateral. As per ***SSP-1***, Building D will utilize the existing 200 mm diameter service lateral stub. Refer to drawing ***SSP-1*** for a detailed servicing layout.

Based on consultation with the City of Ottawa staff, the 5-year and 100-year allowable release rates established for the approved development are ***271.6 L/s*** and ***463.6 L/s***, respectively. An existing ***291 mm*** diameter ICD, installed within storm maintenance structure STM101A, is utilized to restrict flow leaving the site to meet the specified allowable release rates. The previously approved storm calculation sheets dated March 27th, are included for reference in ***Appendix D***.

To meet the stormwater objectives, ***FSB, 2019*** proposed a combination of sub-surface and surface storage. Subsurface storage is provided within maintenance structures, storm sewers, and a ***76 m^3*** underground storage chamber. Surface storage is provided through rooftop storage as well as through surface ponding within parking areas.

Table 7, summarizes the available storage for the approved and proposed amendments for the development.

Table 7 – Available Stormwater Storage

	Surface Storage (m^3)	Roof Storage (m^3)	Underground Storage (m^3)	Maintenance Structures and Sewers (m^3)	Total Storage (m^3)
Approved	857.6	679.2	76	217.0	**1829.8**
Proposed	784.7	598.9	157	217.9	**1758.5**

Due to the changes in the site plan, Building D's footprint has decreased. Further, due to changes in the parking area surrounding Building D the site ponding volume was reduced. In order to compensate for a reduction in available rooftop and surface storage, an additional ***81 m^3*** underground storage system is proposed to attenuate flow to the 5-year and 100-year allowable stormwater release rate of ***271.6 L/s*** and ***463.6 L/s***, respectively.

Table 8, below, summarizes the approved release rates and onsite storage required to meet established target release rates in accordance with the approved stormwater management plan.

Table 8 - Previously Approved SWM Summary

Control Area	5-Year Release Rate (L/s)	5-Year Storage (m^3)	100-Year Release Rate (L/s)	100-Year Storage (m^3)	Storage Available (m^3)
U1	37.3	0.0	79.7	0.0	0.0
U2	10.6	0.0	22.7	0.0	0.0
U3	3.2	0.0	6.1	0.0	0.0
Attenuated Areas *	216.4	331.2	182.1	1134.0	1150.7
Total	**267.5**	**331.2**	**290.6**	**1134.0**	**1150.7**

* Attenuated Areas includes controlled flow from BLDG A-G.
1. Release rate is established using the critical time of concentration producing the highest peak cumulative runoff for the site.
2. Total release rate calculated using attenuated areas+ unattenuated areas

Table 9, below, summarizes the estimated release rates and onsite storage required to meet the established target release rates based on updates to the amended Site Plan.

Table 9 - Proposed Amendment SWM Summary

Control Area	5-Year Release Rate (L/s)	5-Year Storage (m^3)	100-Year Release Rate (L/s)	100-Year Storage (m^3)	Storage Available (m^3)
U1	37.3	0.0	79.7	0.0	0.0
U2	10.6	0.0	22.7	0.0	0.0
U3	3.2	0.0	6.1	0.0	0.0
Attenuated Areas *	191.7	375.0	182.0	1162.8	1182.2
Total	**242.8**	**375.0**	**290.5**	**1162.8**	**1182.2**

* Attenuated Areas includes controlled flow from BLDG A-G and the uncontrolled flow from BLDG D.
1. Release rate is established using the critical time of concentration producing the highest peak cumulative runoff for the site.
2. Total release rate calculated using attenuated areas+ unattenuated areas

Area A1 to A32, shown by drawing ***SWM-1***, are tributary to the existing Hazeldean Tributary. An additional ***81.0 m³*** of underground storage provided via a Triton M-6 underground storage systems or an approved equivalent is proposed in order to maintain the release rate from the site. Stormwater flow will continue to be attenuated by the existing ***291 mm diameter ICD*** installed at the outlet side of STM101A. The attached storm calculation sheets illustrate the existing approved plan and proposed amendment. An updated ***SWM-1*** drawing dated September 2019 and calculation sheets are included in ***Appendix D***.

5.0 CONCLUSION

Unity Square Limited Partnership has retained DSEL to prepare a servicing memo in support of the proposed amendment to the previously approved site plan application for the subject site located at 5754 Hazeldean Road, 24 Iber Road, 5734 Hazeldean Road (D07-12-17-0186). The updated Site Plan proposes a revised Building D design including the parking areas, and drive aisles, resulting in a reduction of approximately ***353 m²*** of commercial space.

An extension to the previously approved service connections will be required to service Building D. No changes to the internal watermain and sanitary networks are proposed. A minor update to the storm sewer network, south of Building D is proposed to accommodate the amended Site Plan.

The City of Ottawa was contacted to obtain boundary conditions associated with the estimated water demand as indicated in the boundary request correspondence included in ***Appendix B***. The City provided both the anticipated minimum and maximum water pressures, as well as, the estimated water pressure during fire flow demand; the minimum and maximum pressures fall within the required range identified in the ***Water Supply Guidelines***. As a result, the municipal system is capable of providing sufficient water supply during fire flow conditions.

Based on the revised Site Plan prepared by Hobin Architecture Inc. the estimated wastewater flow from the proposed development has decreased by approximately 3%. As a result, the existing private internal sanitary sewer has sufficient capacity to support the proposed amendment.

Based on the revised calculations the established allowable release rate has been maintained as ***271.6 L/s*** and ***463.6 L/s***, for the 5-year and 100-year allowable release rates, respectively. Due to the revised Building D footprint and a reduction in surface storage it is estimated that an additional ***81.0 m³*** of storage, provided via an underground storage system, will be required to maintain this release rate.

DSEL trusts that the above will be sufficient to support an amendment to the previously approved stormwater management plan, water supply servicing and wastewater servicing to allow the proposed amendment to proceed. Please contact the undersigned should there be any questions.

Prepared by,
David Schaeffer Engineering Ltd.

Per: Charlotte M. Kelly, EIT

Reviewed by,
David Schaeffer Engineering Ltd.

Per: Alison J. Gosling, EIT.

Reviewed by,
David Schaeffer Engineering Ltd.

Per: Robert D. Freel, P.Eng.

Z:\Projects\19-1133_Huntington_Hazeldean-Iber\B_Design\B3_Reports\B3-2_Servicing (DSEL)\2019-09-20_spa_sub1\2019-09-24_1133_memo_cmk.docx

APPENDIX A

Pre-Consultation

DEVELOPMENT SERVICING STUDY CHECKLIST

19-1133 24/09/2019

4.1 General Content

☐	Executive Summary (for larger reports only).	N/A
☒	Date and revision number of the report.	Design Brief Cover Sheet
☐	Location map and plan showing municipal address, boundary, and layout of proposed development.	N/A
☒	Plan showing the site and location of all existing services.	SSP-1
☐	Development statistics, land use, density, adherence to zoning and official plan, and reference to applicable subwatershed and watershed plans that provide context to applicable subwatershed and watershed plans that provide context to which individual developments must adhere.	N/A
☐	Summary of Pre-consultation Meetings with City and other approval agencies.	N/A
☐	Reference and confirm conformance to higher level studies and reports (Master Servicing Studies, Environmental Assessments, Community Design Plans), or in the case where it is not in conformance, the proponent must provide justification and develop a defendable design criteria.	N/A
☒	Statement of objectives and servicing criteria.	Section 1.0
☒	Identification of existing and proposed infrastructure available in the immediate area.	Sections 2.0, 3.0, 4.0
☐	Identification of Environmentally Significant Areas, watercourses and Municipal Drains potentially impacted by the proposed development (Reference can be made to the Natural Heritage Studies, if available).	N/A
☒	Concept level master grading plan to confirm existing and proposed grades in the development. This is required to confirm the feasibility of proposed stormwater management and drainage, soil removal and fill constraints, and potential impacts to neighbouring properties. This is also required to confirm that the proposed grading will not impede existing major system flow paths.	GP-1
☐	Identification of potential impacts of proposed piped services on private services (such as wells and septic fields on adjacent lands) and mitigation required to address potential impacts.	N/A
☐	Proposed phasing of the development, if applicable.	N/A
☐	Reference to geotechnical studies and recommendations concerning servicing.	N/A
☒	All preliminary and formal site plan submissions should have the following information: -Metric scale -North arrow (including construction North) -Key plan -Name and contact information of applicant and property owner -Property limits including bearings and dimensions -Existing and proposed structures and parking areas -Easements, road widening and rights-of-way -Adjacent street names	SSP-1

4.2 Development Servicing Report: Water

☐	Confirm consistency with Master Servicing Study, if available	N/A
☒	Availability of public infrastructure to service proposed development	Section 2.0
☒	Identification of system constraints	Section 2.0
☒	Identify boundary conditions	Section 2.0
☒	Confirmation of adequate domestic supply and pressure	Section 2.0

*Extracted from the City of Ottawa-Servicing Study Guidelines for Development Applications

☒	Confirmation of adequate fire flow protection and confirmation that fire flow is calculated as per the Fire Underwriter's Survey. Output should show available fire flow at locations throughout the development.	Section 2.0
☐	Provide a check of high pressures. If pressure is found to be high, an assessment is required to confirm the application of pressure reducing valves.	N/A
☐	Definition of phasing constraints. Hydraulic modeling is required to confirm servicing for all defined phases of the project including the ultimate design	N/A
☐	Address reliability requirements such as appropriate location of shut-off valves	N/A
☐	Check on the necessity of a pressure zone boundary modification	N/A
☒	Reference to water supply analysis to show that major infrastructure is capable of delivering sufficient water for the proposed land use. This includes data that shows that the expected demands under average day, peak hour and fire flow conditions provide water within the required pressure range	Section 2.0
☐	Description of the proposed water distribution network, including locations of proposed connections to the existing system, provisions for necessary looping, and appurtenances (valves, pressure reducing valves, valve chambers, and fire hydrants) including special metering provisions.	N/A
☐	Description of off-site required feedermains, booster pumping stations, and other water infrastructure that will be ultimately required to service proposed development, including financing, interim facilities, and timing of implementation.	N/A
☒	Confirmation that water demands are calculated based on the City of Ottawa Design Guidelines.	Section 2.0
☐	Provision of a model schematic showing the boundary conditions locations, streets, parcels, and building locations for reference.	N/A

4.3 Development Servicing Report: Wastewater

☒	Summary of proposed design criteria (Note: Wet-weather flow criteria should not deviate from the City of Ottawa Sewer Design Guidelines. Monitored flow data from relatively new infrastructure cannot be used to justify capacity requirements for proposed infrastructure).	Section 3.0
☐	Confirm consistency with Master Servicing Study and/or justifications for deviations.	N/A
☐	Consideration of local conditions that may contribute to extraneous flows that are higher than the recommended flows in the guidelines. This includes groundwater and soil conditions, and age and condition of sewers.	N/A
☒	Description of existing sanitary sewer available for discharge of wastewater from proposed development.	Section 3.0
☒	Verify available capacity in downstream sanitary sewer and/or identification of upgrades necessary to service the proposed development. (Reference can be made to previously completed Master Servicing Study if applicable)	Section 3.0
☒	Calculations related to dry-weather and wet-weather flow rates from the development in standard MOE sanitary sewer design table (Appendix 'C') format.	Section 3.0, Appendix C
☒	Description of proposed sewer network including sewers, pumping stations, and forcemains.	Section 3.0
☐	Discussion of previously identified environmental constraints and impact on servicing (environmental constraints are related to limitations imposed on the development in order to preserve the physical condition of watercourses, vegetation, soil cover, as well as protecting against water quantity and quality).	N/A

*Extracted from the City of Ottawa-Servicing Study Guidelines for Development Applications

☐	Pumping stations: impacts of proposed development on existing pumping stations or requirements for new pumping station to service development.	N/A
☐	Forcemain capacity in terms of operational redundancy, surge pressure and maximum flow velocity.	N/A
☐	Identification and implementation of the emergency overflow from sanitary pumping stations in relation to the hydraulic grade line to protect against basement flooding.	N/A
☐	Special considerations such as contamination, corrosive environment etc.	N/A

4.4 Development Servicing Report: Stormwater Checklist

☒	Description of drainage outlets and downstream constraints including legality of outlets (i.e. municipal drain, right-of-way, watercourse, or private property)	Section 4.0
☒	Analysis of available capacity in existing public infrastructure.	Section 4.0, Appendix D
☒	A drawing showing the subject lands, its surroundings, the receiving watercourse, existing drainage patterns, and proposed drainage pattern.	Drawings/Figures
☒	Water quantity control objective (e.g. controlling post-development peak flows to pre-development level for storm events ranging from the 2 or 5 year event (dependent on the receiving sewer design) to 100 year return period); if other objectives are being applied, a rationale must be included with reference to hydrologic analyses of the potentially affected subwatersheds, taking into account long-term cumulative effects.	Section 4.0
☒	Water Quality control objective (basic, normal or enhanced level of protection based on the sensitivities of the receiving watercourse) and storage requirements.	Section 4.0
☒	Description of the stormwater management concept with facility locations and descriptions with references and supporting information	Section 4.0
☐	Set-back from private sewage disposal systems.	N/A
☐	Watercourse and hazard lands setbacks.	N/A
☒	Record of pre-consultation with the Ontario Ministry of Environment and the Conservation Authority that has jurisdiction on the affected watershed.	Appendix A
☐	Confirm consistency with sub-watershed and Master Servicing Study, if applicable study exists.	N/A
☒	Storage requirements (complete with calculations) and conveyance capacity for minor events (1:5 year return period) and major events (1:100 year return period).	Section 4.0
☐	Identification of watercourses within the proposed development and how watercourses will be protected, or, if necessary, altered by the proposed development with applicable approvals.	N/A
☒	Calculate pre and post development peak flow rates including a description of existing site conditions and proposed impervious areas and drainage catchments in comparison to existing conditions.	Section 4.0
☐	Any proposed diversion of drainage catchment areas from one outlet to another.	N/A
☐	Proposed minor and major systems including locations and sizes of stormwater trunk sewers, and stormwater management facilities.	N/A
☐	If quantity control is not proposed, demonstration that downstream system has adequate capacity for the post-development flows up to and including the 100-year return period storm event.	N/A
☐	Identification of potential impacts to receiving watercourses	N/A
☐	Identification of municipal drains and related approval requirements.	N/A

*Extracted from the City of Ottawa-Servicing Study Guidelines for Development Applications

☒	Descriptions of how the conveyance and storage capacity will be achieved for the development.	Section 4.0
☐	100 year flood levels and major flow routing to protect proposed development from flooding for establishing minimum building elevations (MBE) and overall grading.	N/A
☐	Inclusion of hydraulic analysis including hydraulic grade line elevations.	N/A
☐	Description of approach to erosion and sediment control during construction for the protection of receiving watercourse or drainage corridors.	N/A
☐	Identification of floodplains – proponent to obtain relevant floodplain information from the appropriate Conservation Authority. The proponent may be required to delineate floodplain elevations to the satisfaction of the Conservation Authority if such information is not available or if information does not match current conditions.	N/A
☐	Identification of fill constraints related to floodplain and geotechnical investigation.	N/A

4.5 Approval and Permit Requirements: Checklist

☐	Conservation Authority as the designated approval agency for modification of floodplain, potential impact on fish habitat, proposed works in or adjacent to a watercourse, cut/fill permits and Approval under Lakes and Rivers Improvement Act. The Conservation Authority is not the approval authority for the Lakes and Rivers Improvement ct. Where there are Conservation Authority regulations in place, approval under the Lakes and Rivers Improvement Act is not required, except in cases of dams as defined in the Act.	N/A
☐	Application for Certificate of Approval (CofA) under the Ontario Water Resources Act.	N/A
☐	Changes to Municipal Drains.	N/A
☐	Other permits (National Capital Commission, Parks Canada, Public Works and Government Services Canada, Ministry of Transportation etc.)	N/A

4.6 Conclusion Checklist

☒	Clearly stated conclusions and recommendations	Section 5.0
☐	Comments received from review agencies including the City of Ottawa and information on how the comments were addressed. Final sign-off from the responsible reviewing agency.	
☐	All draft and final reports shall be signed and stamped by a professional Engineer registered in Ontario	

*Extracted from the City of Ottawa-Servicing Study Guidelines for Development Applications

Robert Freel

From: Matt Wingate <mwingate@dsel.ca>
Sent: November-28-12 2:35 PM
To: 'Robert Freel'
Subject: FW: Preconsultation 4 Iber Road

Pre-consultation notes, including engineering comments, below

---

From: Derek Noble [mailto:dnoble@huntingtonproperties.ca]
Sent: Tuesday, November 20, 2012 10:44 AM
To: Matt Wingate
Cc: Miguel Tremblay; Matt McElligott
Subject: Fwd: Preconsultation 4 Iber Road

Matt Wingate - you should be aware of the issues below. You were not included in the distribution.

Derek D. Noble, CA
Vice-President - Development & Construction
Huntington Properties
O - 613 592 1818 ext.26
C - 613 447 4735
dnoble@huntingtonproperties.ca
www.huntingtonproperties.ca

Sent from my iPhone4.

Begin forwarded message:

> **From:** "Hayley, Matthew" <Matthew.Hayley@ottawa.ca>
> **Date:** 20 November, 2012 8:27:01 AM EST
> **To:** "Moore, Sean" <Sean.Moore@ottawa.ca>, Miguel Tremblay <tremblay@fotenn.com>, Derek Noble <dnoble@huntingtonproperties.ca>
> **Cc:** "Young, Mark" <Mark.Young@ottawa.ca>, "Shen, Stream" <Stream.Shen@ottawa.ca>, "Whittaker, Damien" <Damien.Whittaker@ottawa.ca>
> **Subject: RE: Preconsultation 4 Iber Road**
>
> Miguel,
>
> I know that you have Bernie working on this already but I wanted to add this to Sean's email since I didn't see it under the Required Studies List. The study is described in the OP Section 4.7.3 and pertains to the watercourse alignment and setback. The relocation of the watercourse will need to be supported by a study which meets the requirements of the OP Section 4.7.3 Policy 7 (pasted below for your convenience);
>
> 7. Where an exception to the setback is requested under Policy 6, an alternate setback will be considered by the City in consultation with the Conservation Authority on the basis of a study that addresses the following criteria: [Amendment #96, February 22, 2012]

a. Slope of the bank and geotechnical considerations related to unstable slopes, as addressed in Council's Slope Stability Guidelines for Development Applications in the City of Ottawa, 2004;
b. Natural vegetation and the ecological function of the setback area;
c. The nature of the abutting water body, including the presence of a flood plain;
d. The need to demonstrate that there will be no negative impacts on adjacent fish habitat. [OMB decision #1754, May 10, 2006]

If you have any questions please let me know.

Thanks

Matthew

Matthew Hayley
Development Review
Planning and Growth Management
City of Ottawa
100 Laurier Ave West, 4th Floor,
Ottawa ON K1P 1J1
Tel: 613-580-2424
Fax: 613-580-2576

From: Moore, Sean
Sent: November 19, 2012 4:35 PM
To: Miguel Tremblay; Derek Noble
Cc: Young, Mark; Shen, Stream; Whittaker, Damien; Hayley, Matthew
Subject: RE: Preconsultation 4 Iber Road

Miguel,

Please also submit a **Planning Rationale** (4 copies) to accompany the Zoning By-law Amendment.

Thanks.

Sean.

From: Moore, Sean
Sent: November 19, 2012 4:23 PM
To: Miguel Tremblay; 'Derek Noble'
Cc: Young, Mark; Shen, Stream; Whittaker, Damien; Hayley, Matthew
Subject: Preconsultation 4 Iber Road

Miguel,

As per our pre-consultation meeting on November 15, I have summarized our meeting and added the submission requirements for your two proposed applications. If you have any questions with the below don't hesitate to contact either myself of Mark Young.

Site Plan

Application Type:

- Manager Approval, Public Consultation $18,223.64
- Conservation Authority Fee $860.00
- Design Review and Inspection Fee (depends on the amount of infrastructure/landscaping – please see application)

Site Plan Control application:
https://ottawa.ca/online_services/forms/ds/Application_for_Site_Plan_Control_en.pdf

Required Plans:

- Site Plan (55 copies)
- Landscape Plan (55 copies)
- Grading Plan (55 copies)
- Site Servicing Plan (55 copies)
- Architectural Elevations – full size b/w drawings (5 copies)
- Architectural Elevations - 11x17 colour (2 copies)
- Survey Plan (2 copies)
- Cd with all required plans and studies in pdf

Required Studies:

- Transportation Impact Study (9 copies)
- RMA – changes to road RoW be shown on Site Plan
- Site Servicing Brief & Stormwater Management Report (6 copies)
- Geotechnical Study (4 copies)
- Erosion and Sediment Control Plan (8 copies)
- Phase 1 ESA (4 copies)
- Phase 2 ESA (4 copies) *if identified as required from Phase 1
- Tree Conservation Report

Design Comments:

- Urban Design Review Panel submission is required for the Site Plan (see link below for Agenda times and requirements)
- Link into Hazeldean Road with unit paver nodes and street furniture/lighting (see pdfs)
- Buildings to have frontage along Hazeldean Road, links to main entry's and real glazing along the street frontages

Urban Design Review Panel:
http://ottawa.ca/en/city_hall/planningprojectsreports/planning/dev_review_process/urban_design/

Engineering Comments:

- Water service – a 305 mm dia. PVC water pipe exists in Fringewood Drive and Iber Road. The applicant should connect to that pipe. The applicant should not connect directly to the water main in Hazelean Road.
- Sanitary – as stated in the meeting the applicant intends to send sanitary flows to a private sanitary puimping station in Iber Road and to the Fringewood sanitary pumping station. The applicant should connect to the manhole in Fringewood- not to the pumping station directly.
- Storm – no storm pipes cross or are adjacent to the application.
- Monitoring manholes are required for both sanitary and storm sewers, as per clause 4.4.4.6 and 6.3.2 of the *Sewer Design Guidelines*, Second Edition, Document SDG002, October 2012, City of Ottawa (*Guidelines*)
- Post-development should limit flows to a runoff coefficient 'c' of 0.5 is required for stormwater quantity control, as per clause 5.4.5.2 of the *Guidelines,* or greater if documentation direction

exists. Electronic copies of the *Guidelines* are available, please contact StandardsSection@ottawa.ca

- Quality control for stormwater runoff should be to at least 70% removal of TSS.
- Driving entrances, also referred to as private approaches, require a fee before registration.
- Please contact Charles Goulet of (Ontario) Ministry of the Environment, 613-521-3450, x246 for any requirements that the provincial agency may have.
- Exterior site lighting shall require certification by a qualified engineer confirming the design complies with the following criteria:

1. It must be designed using only fixtures that meet the criteria for Full Cut-Off (Sharp cut-off) Classification, as recognized by the Illuminating Engineering Society of North America (IESNA or IES), and;
2. It must result in minimal light spillage onto adjacent properties. As a guideline, 0.5 foot-candle is normally the maximum allowable spillage.

The location of the fixtures, fixture type/s (as in make, model and part number and the mounting heights) must be shown on one of the approved plans.

- Schedule E of the Official Plan of the City of Ottawa shows Iber Road as a major collector. The annexes table 1 states that collectors should have a R.O.W. width of 26m. The existing R.OW. width is 26m

Zoning By-law Amendment

Application Type:

- Major, $13,942.00
- Conservation Authority Fee $310.00

Requirements:

- Concept Plan (20 copies)

Comments/Issues:

- Zoning will be submitted in early December to start the circulation process (not subject to urban design panel review)
- Site Plan will be submitted in early 2013 and the urban design panel review process will be a part of the application
- Site Plan will need to 'catch-up' to zoning to ensure provisions being requested are tailored to the site plan (i.e. setbacks from re-aligned creek will be important to work out through the site plan and incorporated in the zoning)
- Zoning must respect Employment Designation intent (ancillary uses are permitted and must be minimal or capped at a smaller size) – with primary office or other permitted land uses as the primary use within the Employment Designation.
- Zoning should use an Arterial Mainstreet designation that implements our intentions of Hazeldean Road (i.e. AM7)
- On site water course relocation needs to be further investigated to ensure it does not adversely impact the adjacent Fire Station and our Right of Way along Iber Road
- Quality treatment will be conducted through rooftop and underground storage
- Can we create one joint ditch for both the relocated watercourse and well as the city owned roadside drainage?
- Would the location of the joint ditch pose as an issue if there was in the future to be a road widening on Iber Road? (Becomes a potential additional cost that the City have to incur in the future)
- Would it be better to pipe the drainage underground?
- If the water course is relocated, the fire station to the south of the subject property would fall out of conformity with the current ZBL due an insufficient setback from waterway
- Is there a watershed study for Carp River that reduces the required setback for the fire station?
- Need to schedule meeting with RPAM to consult on the issue to determine if a reduced setback will negatively impact the fire station

- Trees on site is a part of a registered subdivision agreement as a buffer and berm
- The original intention are for the trees to act as a buffer between commercial and office uses against the neighbouring residential uses on the west side
- No longer a issue now that Huntington Property has purchased the adjacent property
- How to legally remove them as a condition within the registered subdivision agreement

Link to application:
https://ottawa.ca/online_services/forms/ds/Application_for_Zoning_Amendment_en.pdf

Regards,

Sean Moore | Planner II | MCIP, RPP
Development Review - Suburban Services Branch
West Unit - Kanata, Sttitsville & Barrhaven
Planning & Growth Management Department
City of Ottawa

Ph. 613.580.2424 ext. 16481
Fax 613.560.6006
www.ottawa.ca/en/city_hall/planningprojectsreports/planning/

APPENDIX B

Water Supply

Functional Servicing and Stormwater Management Report
For Iber Hazeldean Land Limited

5754 Hazeldean Road / 24 Iber Road / 5734 Hazeldean Road
July 2019 – REV 12

Previously Approved Appendix B – Water Supply

Iber Hazedlean Land Limited
5734-5754 Hazeldean Road/24 Iber Road
Proposed Site Conditions

PREVIOUSLY APPROVED (D07-12-17-0186)

Water Demand Design Flows per Zoning
City of Ottawa - Water Distribution Guidelines, July 2010

Institutional / Commercial / Industrial Demand

				Avg. Daily		Max Day		Peak Hour	
Property Type	**Unit Rate**		**Units**	**m^3/d**	**L/min**	**m^3/d**	**L/min**	**m^3/d**	**L/min**
Commercial floor space	2.5	$L/m^2/d$	10,690	26.73	18.6	40.1	27.8	72.2	50.1
Office	75	$L/9.3m^2/d$		0.00	0.0	0.0	0.0	0.0	0.0
Industrial - Light	35,000	L/gross ha/d		0.00	0.0	0.0	0.0	0.0	0.0
Other -Commercial	28,000	L/gross ha/d		0.00	0.0	0.0	0.0	0.0	0.0
			Total I/CI Demand	26.7	18.6	40.1	27.8	72.2	50.1
			Total Demand	**26.7**	**18.6**	**40.1**	**27.8**	**72.2**	**50.1**

5734-5754 Hazeldean Road/24 Iber Road
FUS-FIre Flow Demand
Building A

PREVIOUSLY APPROVED (D07-12-17-0186)

Fire Flow Estimation per Fire Underwriters Survey

Water Supply For Public Fire Protection - 1999

Fire Flow Required

1. Base Requirement

$F = 220C\sqrt{A}$ L/min *Where **F** is the fire flow, **C** is the Type of construction and **A** is the Total floor area*

Type of Construction: Non-Combustible Construction

C	0.8		*Type of Construction Coefficient per FUS Part II, Section 1*
A	2145.0	m^2	*Total floor area based on FUS Part II section 1*

Fire Flow	8151.3	L/min	
	8000.0	**L/min**	*rounded to the nearest 1,000 L/min*

Adjustments

2. Reduction for Occupancy Type

Non-Combustible	-25%	
Fire Flow	**6000.0**	**L/min**

3. Reduction for Sprinkler Protection

Sprinklered	-50%	
Reduction	**-3000**	**L/min**

4. Increase for Separation Distance

N	>45m	0%	
S	10.1m-20m	15%	
E	>45m	0%	
W	>45m	0%	
	% Increase	**15%**	*value not to exceed 75% per FUS Part II, Section 4*
	Increase	**900.0**	**L/min**

Total Fire Flow

Fire Flow	3900.0	L/min	*fire flow not to exceed 45,000 L/min nor be less than 2,000 L/min per FUS Section*
	4000.0	**L/min**	*rounded to the nearest 1,000 L/min*

Notes:
-Type of construction, Occupancy Type and Sprinkler Protection information provided by _____.
-Calculations based on Fire Underwriters Survey - Part II

PREVIOUSLY APPROVED (D07-12-17-0186)

Fire Flow Estimation per Fire Underwriters Survey

Water Supply For Public Fire Protection - 1999

Fire Flow Required

1. Base Requirement

$F = 220C\sqrt{A}$ L/min *Where **F** is the fire flow, **C** is the Type of construction and **A** is the Total floor area*

Type of Construction: Non-Combustible Construction

C	0.8		*Type of Construction Coefficient per FUS Part II, Section 1*
A	1395.0	m^2	*Total floor area based on FUS Part II section 1*

Fire Flow	6573.5 L/min	
	7000.0 L/min	*rounded to the nearest 1,000 L/min*

Adjustments

2. Reduction for Occupancy Type

Non-Combustible	-25%
Fire Flow	**5250.0 L/min**

3. Reduction for Sprinkler Protection

Sprinklered	-50%
Reduction	**-2625 L/min**

4. Increase for Separation Distance

N	>45m	0%	
S	10.1m-20m	15%	
E	10.1m-20m	15%	
W	>45m	0%	
	% Increase	**30%**	*value not to exceed 75% per FUS Part II, Section 4*
	Increase	**1575.0 L/min**	

Total Fire Flow

Fire Flow	4200.0 L/min	*fire flow not to exceed 45,000 L/min nor be less than 2,000 L/min per FUS Section*
	4000.0 L/min	*rounded to the nearest 1,000 L/min*

Notes:
-Type of construction, Occupancy Type and Sprinkler Protection information provided by _____.
-Calculations based on Fire Underwriters Survey - Part II

5734-5754 Hazeldean Road/24 Iber Road
FUS-FIre Flow Demand
Building BB

PREVIOUSLY APPROVED (D07-12-17-0186)

Fire Flow Estimation per Fire Underwriters Survey

Water Supply For Public Fire Protection - 1999

Fire Flow Required

1. Base Requirement

$F = 220C\sqrt{A}$ L/min *Where **F** is the fire flow, **C** is the Type of construction and **A** is the Total floor area*

Type of Construction: Non-Combustible Construction

C	0.8		*Type of Construction Coefficient per FUS Part II, Section 1*
A	375.0	m^2	*Total floor area based on FUS Part II section 1*

Fire Flow	3408.2 L/min	
	3000.0 L/min	*rounded to the nearest 1,000 L/min*

Adjustments

2. Reduction for Occupancy Type

Non-Combustible	-25%
Fire Flow	**2250.0 L/min**

3. Reduction for Sprinkler Protection

Sprinklered	-50%
Reduction	**-1125 L/min**

4. Increase for Separation Distance

N	10.1m-20m	15%	
S	>45m	0%	
E	10.1m-20m	15%	
W	>45m	0%	
	% Increase	**30%**	*value not to exceed 75% per FUS Part II, Section 4*
	Increase	**675.0 L/min**	

Total Fire Flow

Fire Flow	2000.0 L/min	*fire flow not to exceed 45,000 L/min nor be less than 2,000 L/min per FUS Section*
	2000.0 L/min	*rounded to the nearest 1,000 L/min*

Notes:
-Type of construction, Occupancy Type and Sprinkler Protection information provided by _____.
-Calculations based on Fire Underwriters Survey - Part II

PREVIOUSLY APPROVED (D07-12-17-0186)

Fire Flow Estimation per Fire Underwriters Survey

Water Supply For Public Fire Protection - 1999

Fire Flow Required

1. Base Requirement

$F = 220C\sqrt{A}$ L/min *Where **F** is the fire flow, **C** is the Type of construction and **A** is the Total floor area*

Type of Construction: Non-Combustible Construction

C	0.8		*Type of Construction Coefficient per FUS Part II, Section 1*
A	2886.0	m^2	*Total floor area based on FUS Part II section 1*

Fire Flow	9455.0 L/min	
	9000.0 L/min	*rounded to the nearest 1,000 L/min*

Adjustments

2. Reduction for Occupancy Type

Non-Combustible	-25%
Fire Flow	**6750.0 L/min**

3. Reduction for Sprinkler Protection

Sprinklered	-50%
Reduction	**-3375 L/min**

4. Increase for Separation Distance

N	3.1m-10m	20%	
S	20.1m-30m	10%	
E	20.1m-30m	10%	
W	10.1m-20m	15%	
	% Increase	**55%**	*value not to exceed 75% per FUS Part II, Section 4*
	Increase	**3712.5 L/min**	

Total Fire Flow

Fire Flow	7087.5 L/min	*fire flow not to exceed 45,000 L/min nor be less than 2,000 L/min per FUS Section*
	7000.0 L/min	*rounded to the nearest 1,000 L/min*

Notes:
-Type of construction, Occupancy Type and Sprinkler Protection information provided by _____.
-Calculations based on Fire Underwriters Survey - Part II

5734-5754 Hazeldean Road/24 Iber Road
FUS-FIre Flow Demand
Building D

PREVIOUSLY APPROVED (D07-12-17-0186)

Fire Flow Estimation per Fire Underwriters Survey

Water Supply For Public Fire Protection - 1999

Fire Flow Required

1. Base Requirement

$F = 220C\sqrt{A}$ L/min *Where **F** is the fire flow, **C** is the Type of construction and **A** is the Total floor area*

Type of Construction: Non-Combustible Construction

C	0.8		*Type of Construction Coefficient per FUS Part II, Section 1*
A	2150.0	m^2	*Total floor area based on FUS Part II section 1*

Fire Flow	8160.8	L/min	
	8000.0	**L/min**	*rounded to the nearest 1,000 L/min*

Adjustments

2. Reduction for Occupancy Type

Non-Combustible	-25%	
Fire Flow	**6000.0**	**L/min**

3. Reduction for Sprinkler Protection

Sprinklered	-50%	
Reduction	**-3000**	**L/min**

4. Increase for Separation Distance

N	10.1m-20m	15%	
S	>45m	0%	
E	>45m	0%	
W	>45m	0%	
	% Increase	**15%**	*value not to exceed 75% per FUS Part II, Section 4*
	Increase	**900.0**	**L/min**

Total Fire Flow

Fire Flow	3900.0	L/min	*fire flow not to exceed 45,000 L/min nor be less than 2,000 L/min per FUS Section*
	4000.0	**L/min**	*rounded to the nearest 1,000 L/min*

Notes:
-Type of construction, Occupancy Type and Sprinkler Protection information provided by _____.
-Calculations based on Fire Underwriters Survey - Part II

PREVIOUSLY APPROVED (D07-12-17-0186)

Fire Flow Estimation per Fire Underwriters Survey

Water Supply For Public Fire Protection - 1999

Fire Flow Required

1. Base Requirement

$F = 220C\sqrt{A}$ L/min *Where **F** is the fire flow, **C** is the Type of construction and **A** is the Total floor area*

Type of Construction: Non-Combustible Construction

C	0.8		*Type of Construction Coefficient per FUS Part II, Section 1*
A	2150.0	m^2	*Total floor area based on FUS Part II section 1*

Fire Flow	8160.8	L/min	
	8000.0	**L/min**	*rounded to the nearest 1,000 L/min*

Adjustments

2. Reduction for Occupancy Type

Non-Combustible	-25%	
Fire Flow	**6000.0**	**L/min**

3. Reduction for Sprinkler Protection

Sprinklered	-50%	
Reduction	**-3000**	**L/min**

4. Increase for Separation Distance

N	>45m	0%	
S	30.1m-45m	5%	
E	>45m	0%	
W	>45m	0%	
	% Increase	**5%**	*value not to exceed 75% per FUS Part II, Section 4*
	Increase	**300.0**	**L/min**

Total Fire Flow

Fire Flow	3300.0	L/min	*fire flow not to exceed 45,000 L/min nor be less than 2,000 L/min per FUS Section*
	3000.0	**L/min**	*rounded to the nearest 1,000 L/min*

Notes:
-Type of construction, Occupancy Type and Sprinkler Protection information provided by _____.
-Calculations based on Fire Underwriters Survey - Part II

5734-5754 Hazeldean Road/24 Iber Road

Boundary Conditions Unit Conversion

PREVIOUSLY APPROVED (D07-12-17-0186)

Boundary Conditions Unit Conversion

Fringewood Connection (Connection 1)

	Height (m)	Elevation (m	m H_2O	PSI	kPa		L/s	L/min
Max HGL	161.1	104.5	56.6	80.5	555.2	**Fire Flow**	116.7	7000
Fire Flow	157.8	104.5	53.3	75.8	522.9			
Peak Hour	159.0	104.5	54.5	77.5	534.6			

Iber Rd Connection (Connection 2)

	Height (m)	Elevation (m	m H_2O	PSI	kPa		L/s	L/min
Max HGL	161.2	103.1	58.1	82.7	570.0	**Fire Flow**	116.7	7000
Fire Flow	157.9	103.1	54.8	78.0	537.6			
Peak Hour	158.9	103.1	55.8	79.4	547.4			

5734-5754 Hazeldean Road/24 Iber Road
EPANet Model Results

PREVIOUSLY APPROVED (D07-12-17-0186)

Minor Loss Coefficients

Fitting	Loss Coefficient
Globe valve, fully open	10
Angle valve, fully open	5
Swing check valve, fully open	2.5
Gate valve, fully open	0.2
Short-radius elbow	0.9
Medium-radius elbow	0.8
Long-radius elbow	0.6
45 degree elbow	0.4
Closed return bend	2.2
Standard tee - flow through	0.6
Standard tee - flow through	1.8
Square Entrance	0.5
Exit	1

*Minor loss coefficients based on EPANET 2 USERS MANUAL, dated September 2000

Pipe Diameter vs. "C" Factor

Pipe Diameter (m)	C-Factor
150	100
200 to 250	110
300 to 600	120
Over 600	130

Node Pressures

Kpa	Pressure (kPa)	Pressure (m H20)
Max	552	56.3
Rec Max	480	49.0
Rec Min	350	35.7
Min	275	28.1

Location	Average Day (kPa)	Max Day + Fire Flow (Fire Flow at Critical Node) (kPa)	Max Day + Fire Flow (Fire Flow at Node) (kPa)	Peak Hour (kPa)
FH1	589.6	557.1	375.4	567.0
FH3	586.6	212.9	266.4	566.0
FH4	583.3	406.9	275.4	562.7
FH5	583.5	473.0	359.3	562.9
FH6	590.1	431.2	316.9	569.5

Location	Average Day (kPa)	Max Day + Fire Flow (kPa)	Peak Hour (kPa)
1	588.6	556.1	566.0
2	587.6	555.1	565.1
3	590.1	557.6	567.5
4	589.1	466.8	568.5
5	588.6	556.0	566.0
6	588.6	454.1	568.0
7	588.6	429.8	568.0
8	587.8	374.7	567.2
9	586.6	354.7	566.0
10	583.3	406.9	562.7
11	582.9	512.6	562.3
12	578.7	527.1	558.1
13	582.5	472.1	561.9
16	586.6	554.1	564.1
20	588.6	556.1	566.0
BLDGA	579.8	509.4	559.2
BLDGB	584.7	552.1	562.1
BLDGBB	587.6	555.0	565.1
BLDGC	581.2	529.6	560.6
BLDGD	587.6	555.1	565.1
BLDGG	587.6	555.1	565.1
FH1	589.6	557.1	567.0
FH3	586.6	212.9	566.0
FH4	583.3	406.9	562.7
FH5	583.5	473.0	562.9
FH6	590.1	431.2	569.5

5734-5754 Hazeldean Road/24 Iber Road
EPANet Model Results

PREVIOUSLY APPROVED (D07-12-17-0186)

Adjusted Pressures at Building FFE

Location	Average Day (kPa)	Max Day + Fire Flow (kPa)	Peak Hour (kPa)
BLDGA	555.7	485.4	535.1
BLDGB	560.6	528.0	538.0
BLDGBB	563.5	531.0	541.0
BLDGC	557.1	505.6	536.6
BLDGD	563.5	531.1	541.0
BLDGG	563.5	531.1	541.0

Boundary Conditions 5734 – 5754 Hazeldean Road, 24 Iber Road

Information Provided

Date provided: 07 March 2018

Provided Information:

Scenario	Demand	
	L/min	L/s
Average Daily Demand	19.3	0.3
Maximum Daily Demand	28.9	0.5
Peak Hour	52	0.9
Fire Flow Demand	7000	116.7

# of connections 2

Location

Results

Connection 1 - Fringewood Dr.

Demand Scenario	Head (m)	Pressure[1] (psi)
Maximum HGL	161.1	80.4
Peak Hour	157.8	75.7
Max Day plus Fire (7,000 l/min)	159.0	77.4

[1] Ground Elevation = 104.56 m

Connection 2 - Iber Rd.

Demand Scenario	Head (m)	Pressure[1] (psi)
Maximum HGL	161.2	82.6
Peak Hour	157.9	77.7
Max Day plus Fire (7,000 l/min)	158.9	79.3

[1] Ground Elevation = 103.11 m

1) As per the Ontario Building Code in areas that may be occupied, the static pressure at any fixture shall not exceed 552 kPa (80 psi.) Pressure control measures to be considered are as follows, in order of preference:
   a) If possible, systems to be designed to residual pressures of 345 to 552 kPa (50 to 80 psi) in all occupied areas outside of the public right-of-way without special pressure control equipment.
   b) Pressure reducing valves to be installed immediately downstream of the isolation valve in the home/ building, located downstream of the meter so it is owner maintained.

Disclaimer

The boundary condition information is based on current operation of the city water distribution system. The computer model simulation is based on the best information available at the time. The operation of the water distribution system can change on a regular basis, resulting in a variation in boundary conditions. The physical properties of watermains deteriorate over time, as such must be assumed in the absence of actual field test data. The variation in physical watermain properties can therefore alter the results of the computer model simulation. Fire Flow analysis is a reflection of available flow in the watermain; there may be additional restrictions that occur between the watermain and the hydrant that the model cannot take into account.

Boundary Condition for 2 Iber Rd and 5734-5754 Fringewood Dr

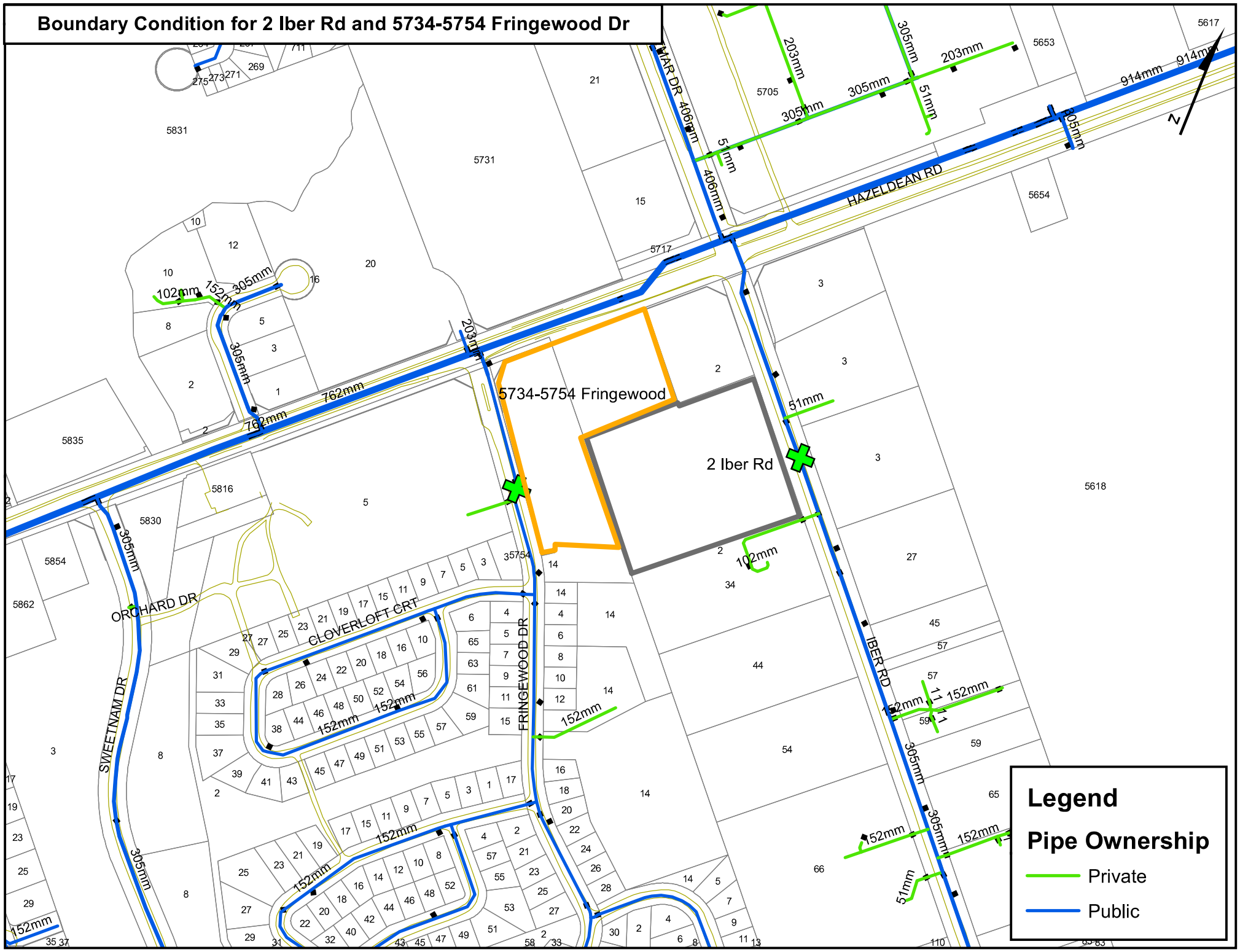

Site Servicing and Stormwater Management Brief
For Iber Hazeldean Land Limited

5754 Hazeldean Road / 24 Iber Road / 5734 Hazeldean Road
September 2019 – REV 1

Proposed Amended Appendix B – Water Supply

Water Demand Design Flows per Zoning
City of Ottawa - Water Distribution Guidelines, July 2010

Institutional / Commercial / Industrial Demand

				Avg. Daily		Max Day		Peak Hour	
Property Type	**Unit Rate**		**Units**	**m^3/d**	**L/min**	**m^3/d**	**L/min**	**m^3/d**	**L/min**
Total Commercial floor space	2.5	L/m^2/d	10,337	25.84	17.9	38.8	26.9	69.8	48.5
Office	75	L/9.3m^2/d		0.00	0.0	0.0	0.0	0.0	0.0
Industrial - Light	35,000	L/gross ha/d		0.00	0.0	0.0	0.0	0.0	0.0
Other -Commercial	28,000	L/gross ha/d		0.00	0.0	0.0	0.0	0.0	0.0
			Total I/CI Demand	25.8	17.9	38.8	26.9	69.8	48.5
			Total Demand	**25.8**	**17.9**	**38.8**	**26.9**	**69.8**	**48.5**

Fire Flow Estimation per Fire Underwriters Survey

Water Supply For Public Fire Protection - 1999

Fire Flow Required

1. Base Requirement

$$F = 220C\sqrt{A}$$ L/min *Where **F** is the fire flow, **C** is the Type of construction and **A** is the Total floor area*

Type of Construction: Non-Combustible Construction

C	0.8		*Type of Construction Coefficient per FUS Part II, Section 1*
A	661.8	m^2	*Total floor area based on FUS Part II section 1*

Fire Flow	4527.7	L/min	
	5000.0	**L/min**	*rounded to the nearest 1,000 L/min*

Adjustments

2. Reduction for Occupancy Type

Non-Combustible	-25%	
Fire Flow	**3750.0**	**L/min**

3. Reduction for Sprinkler Protection

Sprinklered - Supervised	-50%	
Reduction	**-1875**	**L/min**

4. Increase for Separation Distance

	Cons. of Exposed Wall	S.D	Lw	Ha	LH	EC	
N	Non-Combustible	20.1m-30m	0	0	0	8%	
S	Non-Combustible	>45m	0	0	0	0%	
E	Non-Combustible	>45m	0	0	0	0%	
W	Non-Combustible	>45m	0	0	0	0%	
		% Increase				**8%**	*value not to exceed 75%*

Increase	**300.0**	**L/min**

Lw = Length of the Exposed Wall
Ha = number of storeys of the adjacent structure. Max 5 stories
LH = Length-height factor of exposed wall. Value rounded up.
EC = Exposure Charge

Total Fire Flow

Fire Flow	2175.0	L/min	*fire flow not to exceed 45,000 L/min nor be less than 2,000 L/min per FUS Section*
	2000.0	**L/min**	*rounded to the nearest 1,000 L/min*

Notes:
-Type of construction, Occupancy Type and Sprinkler Protection information provided by _____.
-Calculations based on Fire Underwriters Survey - Part II

Minor Loss Coefficients

Fitting	Loss Coefficient
Globe valve, fully open	10
Angle valve, fully open	5
Swing check valve, fully open	2.5
Gate valve, fully open	0.2
Short-radius elbow	0.9
Medium-radius elbow	0.8
Long-radius elbow	0.6
45 degree elbow	0.4
Closed return bend	2.2
Standard tee - flow through	0.6
Standard tee - flow through	1.8
Square Entrance	0.5
Exit	1

*Minor loss coefficients based on EPANET 2 USERS MANUAL, dated September 2000

Pipe Diameter vs. "C" Factor

Pipe Diameter (m)	C-Factor
150	100
200 to 250	110
300 to 600	120
Over 600	130

Node Pressures

Kpa	Pressure (kPa)	Pressure (m H20)
Max	552	56.3
Rec Max	480	49.0
Rec Min	350	35.7
Min	275	28.1

Location	Average Day (kPa)	Max Day + Fire Flow (Fire Flow at Critical Node) (kPa)	Max Day + Fire Flow (Fire Flow at Node) (kPa)	Peak Hour (kPa)
FH1	589.6	557.1	317.4	567.0
FH3	586.6	212.9	212.9	566.0
FH4	583.3	406.9	224.8	562.7
FH5	583.5	473.0	312.3	562.9
FH6	590.1	431.2	257.9	569.5

Location	Average Day (kPa)	Max Day + Fire Flow (kPa)	Peak Hour (kPa)
1	588.6	556.1	566.0
2	587.6	555.1	565.1
3	590.1	557.6	567.5
4	589.1	466.8	568.5
5	588.6	556.0	566.0
6	588.6	454.1	568.0
7	588.6	429.8	568.0
8	587.8	374.7	567.2
9	586.6	354.7	566.0
10	583.3	406.9	562.7
11	582.9	512.5	562.3
12	578.7	527.1	558.1
13	582.5	472.1	561.9
16	586.6	554.1	564.1
20	588.6	556.1	566.0
BLDGA	579.8	509.3	559.2
BLDGB	584.7	552.1	562.1
BLDGBB	587.6	555.0	565.1
BLDGC	581.2	529.6	560.6
BLDGD	587.6	555.1	565.1
BLDGG	587.6	555.1	565.1
FH1	589.6	557.1	567.0
FH3	586.6	212.9	566.0
FH4	583.3	406.9	562.7
FH5	583.5	473.0	562.9
FH6	590.1	431.2	569.5

Adjusted Pressures at Building FFE

Location	Average Day (kPa)	Max Day + Fire Flow (kPa)	Peak Hour (kPa)
BLDGA	555.7	485.3	535.1
BLDGB	560.6	528.0	538.0
BLDGBB	563.5	531.0	541.0
BLDGC	557.1	505.6	536.6
BLDGD	563.5	531.1	541.0
BLDGG	563.5	531.1	541.0

WATERMAIN ANALYSIS - AVERAGE DAY DEMAND

Day 1, 12:00 AM

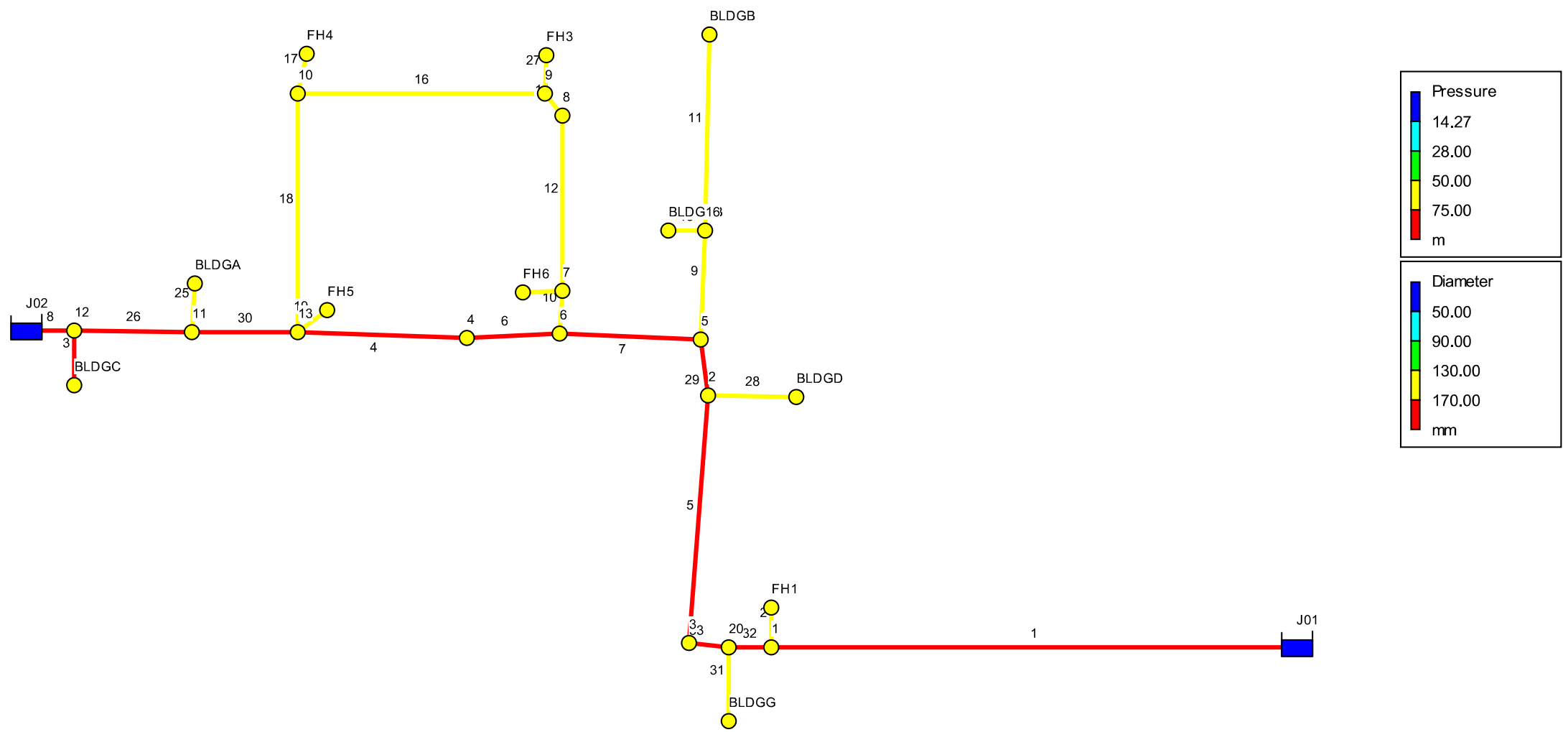

```
**********************************************************************
*                            E P A N E T                             *
*                    Hydraulic and Water Quality                     *
*                    Analysis for Pipe Networks                      *
*                          Version 2.0                               *
**********************************************************************
```

Input File: 2019-09-20_558_AVERAGE.net

Link - Node Table:

Link ID	Start Node	End Node	Length m	Diameter mm
1	J01	1	92.30	200
2	FH1	1	6.1	150
5	3	2	54.33	200
12	7	8	40.1	150
16	9	10	54.9	150
17	FH4	10	2.6	150
18	10	13	55	150
19	FH5	13	8	150
25	11	BLDGA	35.5	150
26	11	12	6.97	200
14	8	9	8	150
10	7	6	9.4	150
4	13	4	44.6	200
6	4	6	39.6	200
7	6	5	39	200
9	5	16	20	150
11	16	BLDGB	48	150
13	16	BLDGBB	4	150
20	7	FH6	4	150
27	9	FH3	4	150
28	2	BLDGD	13.7	150
29	5	2	17.88	200
30	11	13	40.5	200
31	BLDGG	20	10.3	150
32	1	20	4.81	200
33	20	3	4.39	200
3	12	BLDGC	7.49	200
8	J02	12	7.49	200

Node Results:

Node ID	Demand LPM	Head m	Pressure m	Quality	
FH1	0.00	161.20	60.10	0.00	
1	0.00	161.20	60.00	0.00	
3	0.00	161.20	60.15	0.00	
4	0.00	161.10	60.05	0.00	
6	0.00	161.10	60.00	0.00	
FH6	0.00	161.10	60.15	0.00	
7	0.00	161.10	60.00	0.00	
8	0.00	161.10	59.92	0.00	
FH3	0.00	161.10	59.80	0.00	
FH4	0.00	161.10	59.46	0.00	
10	0.00	161.10	59.46	0.00	
FH5	0.00	161.10	59.48	0.00	
13	0.00	161.10	59.38	0.00	
11	0.00	161.10	59.42	0.00	
BLDGA	3.57	161.10	59.10	0.00	
9	0.00	161.10	59.80	0.00	
2	0.00	161.20	59.90	0.00	
5	0.00	161.20	60.00	0.00	
BLDGB	2.65	161.20	59.60	0.00	
BLDGBB	0.72	161.20	59.90	0.00	
16	0.00	161.20	59.80	0.00	
BLDGC	5.61	161.10	59.25	0.00	
BLDGD	1.29	161.20	59.90	0.00	
BLDGG	4.11	161.20	59.90	0.00	
20	0.00	161.20	60.00	0.00	
12	0.00	161.10	58.99	0.00	
J01	-20.36	161.20	0.00	0.00	Reservoir
J02	2.40	161.10	0.00	0.00	Reservoir

Link Results:

Link ID	Flow LPM	VelocityUnit m/s	Headloss m/km	Status
1	20.36	0.01	0.00	Open
2	0.00	0.00	0.00	Open
5	16.25	0.01	0.00	Open
12	2.63	0.00	0.00	Open
16	2.63	0.00	0.00	Open
17	0.00	0.00	0.00	Open
18	2.63	0.00	0.00	Open
19	0.00	0.00	0.00	Open
25	3.57	0.00	0.00	Open
26	8.01	0.00	0.00	Open
14	2.63	0.00	0.00	Open
10	-2.63	0.00	0.00	Open

4	-8.95	0.00	0.00	Open

Page 3

Link Results: (continued)

Link ID	Flow LPM	VelocityUnit m/s	Headloss m/km	Status
6	-8.95	0.00	0.00	Open
7	-11.59	0.01	2.55	Open
9	3.37	0.00	0.00	Open
11	2.65	0.00	0.00	Open
13	0.72	0.00	0.00	Open
20	0.00	0.00	0.00	Open
27	0.00	0.00	0.00	Open
28	1.29	0.00	0.00	Open
29	-14.96	0.01	0.00	Open
30	-11.58	0.01	0.00	Open
31	-4.11	0.00	0.00	Open
32	20.36	0.01	0.00	Open
33	16.25	0.01	0.00	Open
3	5.61	0.00	0.00	Open
8	-2.40	0.00	0.00	Open

WATERMAIN ANALYSIS - MAX DAY + FF DEMAND

Day 1, 12:00 AM

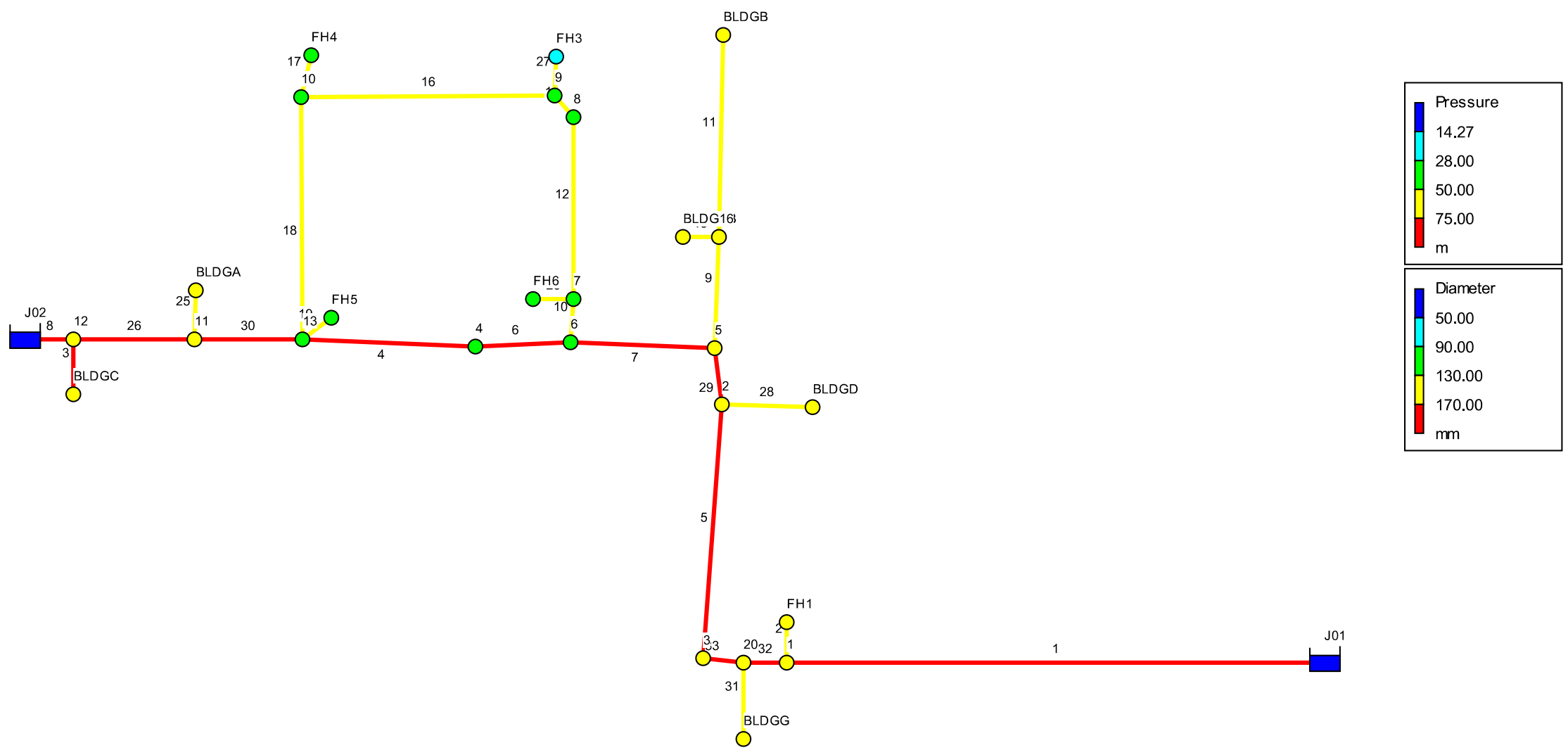

```
**********************************************************************
*                            E P A N E T                             *
*                    Hydraulic and Water Quality                     *
*                    Analysis for Pipe Networks                      *
*                          Version 2.0                               *
**********************************************************************
```

Input File: 2019-09-20_558_MAX _ FF.net

Link - Node Table:

Link ID	Start Node	End Node	Length m	Diameter mm
1	J01	1	92.30	200
2	FH1	1	6.1	150
5	3	2	54.33	200
12	7	8	40.1	150
16	9	10	54.9	150
17	FH4	10	2.6	150
18	10	13	55	150
19	FH5	13	8	150
25	11	BLDGA	35.5	150
26	11	12	6.97	200
14	8	9	8	150
10	7	6	9.4	150
4	13	4	44.6	200
6	4	6	39.6	200
7	6	5	39	200
9	5	16	20	150
11	16	BLDGB	48	150
13	16	BLDGBB	4	150
20	7	FH6	4	150
27	9	FH3	4	150
28	2	BLDGD	13.7	150
29	5	2	17.88	200
30	11	13	40.5	200
31	BLDGG	20	10.3	150
32	1	20	4.81	200
33	20	3	4.39	200
3	12	BLDGC	7.49	200
8	J02	12	7.49	200

Node Results:

Node ID	Demand LPM	Head m	Pressure m	Quality	
FH1	0.00	157.89	56.79	0.00	
1	0.00	157.89	56.69	0.00	
3	0.00	157.89	56.84	0.00	
4	0.00	148.63	47.58	0.00	
6	0.00	147.39	46.29	0.00	
FH6	0.00	144.91	43.96	0.00	
7	0.00	144.91	43.81	0.00	
8	0.00	139.38	38.20	0.00	
FH3	7000.00	123.00	21.70	0.00	
FH4	0.00	143.12	41.48	0.00	
10	0.00	143.12	41.48	0.00	
FH5	0.00	149.84	48.22	0.00	
13	0.00	149.84	48.12	0.00	
11	0.00	153.92	52.24	0.00	
BLDGA	5.36	153.92	51.92	0.00	
9	0.00	137.46	36.16	0.00	
2	0.00	157.89	56.59	0.00	
5	0.00	157.88	56.68	0.00	
BLDGB	3.98	157.88	56.28	0.00	
BLDGBB	1.08	157.88	56.58	0.00	
16	0.00	157.88	56.48	0.00	
BLDGC	8.41	155.84	53.99	0.00	
BLDGD	1.93	157.89	56.59	0.00	
BLDGG	6.16	157.89	56.59	0.00	
20	0.00	157.89	56.69	0.00	
12	0.00	155.84	53.73	0.00	
J01	-156.37	157.90	0.00	0.00	Reservoir
J02	-6870.55	157.80	0.00	0.00	Reservoir

Link Results:

Link ID	Flow LPM	Velocity m/s	Unit Headloss m/km	Status
1	156.37	0.08	0.08	Open
2	0.00	0.00	0.00	Open
5	150.21	0.08	0.08	Open
12	3755.06	3.54	137.90	Open
16	-3244.94	3.06	103.14	Open
17	0.00	0.00	0.00	Open
18	-3244.94	3.06	122.22	Open
19	0.00	0.00	0.00	Open
25	5.36	0.01	0.00	Open
26	-6862.14	3.64	274.64	Open
14	3755.06	3.54	240.15	Open
10	-3755.06	3.54	264.28	Open

4	3611.84	1.92	27.17	Open

Page 3
Link Results: (continued)

Link ID	Flow LPM	VelocityUnit m/s	Headloss m/km	Status
6	3611.84	1.92	31.26	Open
7	-143.22	0.08	268.99	Open
9	5.06	0.00	0.00	Open
11	3.98	0.00	0.00	Open
13	1.08	0.00	0.00	Open
20	0.00	0.00	0.00	Open
27	7000.00	6.60	3615.77	Open
28	1.93	0.00	0.00	Open
29	-148.28	0.08	0.10	Open
30	6856.78	3.64	100.77	Open
31	-6.16	0.01	0.00	Open
32	156.37	0.08	0.22	Open
33	150.21	0.08	0.25	Open
3	8.41	0.00	0.00	Open
8	6870.55	3.64	261.81	Open

WATERMAIN ANALYSIS - PEAK HOUR DEMAND

Day 1, 12:00 AM

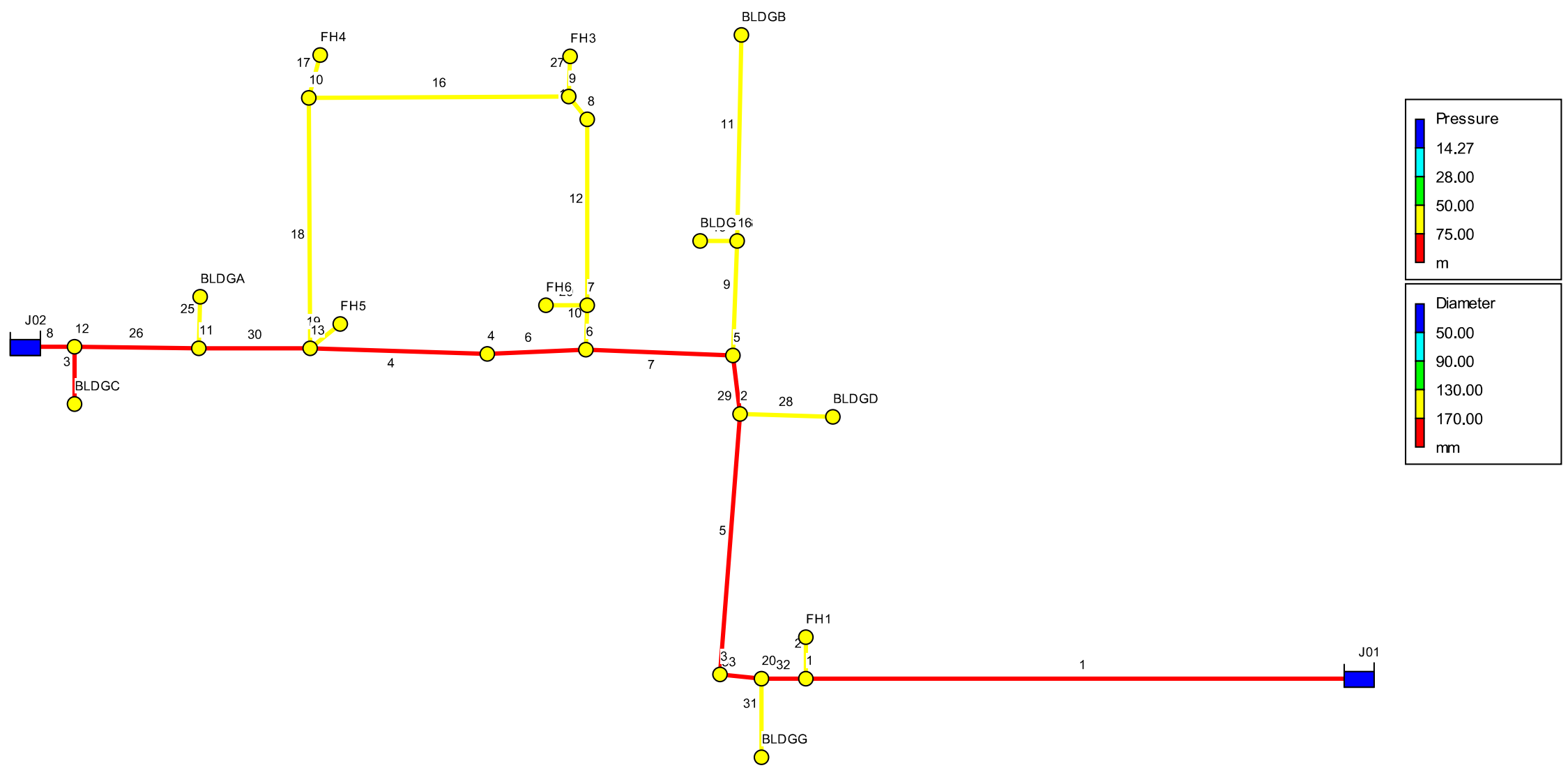

```
**********************************************************************
*                            E P A N E T                             *
*                    Hydraulic and Water Quality                     *
*                    Analysis for Pipe Networks                      *
*                          Version 2.0                               *
**********************************************************************
```

Input File: 2019-09-20_558_PEAK-HOUR.net

Link - Node Table:

Link ID	Start Node	End Node	Length m	Diameter mm
1	J01	1	92.30	200
2	FH1	1	6.1	150
5	3	2	54.33	200
12	7	8	40.1	150
16	9	10	54.9	150
17	FH4	10	2.6	150
18	10	13	55	150
19	FH5	13	8	150
25	11	BLDGA	35.5	150
26	11	12	6.97	200
14	8	9	8	150
10	7	6	9.4	150
4	13	4	44.6	200
6	4	6	39.6	200
7	6	5	39	200
9	5	16	20	150
11	16	BLDGB	48	150
13	16	BLDGBB	4	150
20	7	FH6	4	150
27	9	FH3	4	150
28	2	BLDGD	13.7	150
29	5	2	17.88	200
30	11	13	40.5	200
31	BLDGG	20	10.3	150
32	1	20	4.81	200
33	20	3	4.39	200
3	12	BLDGC	7.49	200
8	J02	12	7.49	200

Node Results:

Node ID	Demand LPM	Head m	Pressure m	Quality	
FH1	0.00	158.90	57.80	0.00	
1	0.00	158.90	57.70	0.00	
3	0.00	158.90	57.85	0.00	
4	0.00	159.00	57.95	0.00	
6	0.00	159.00	57.90	0.00	
FH6	0.00	159.00	58.05	0.00	
7	0.00	159.00	57.90	0.00	
8	0.00	159.00	57.82	0.00	
FH3	0.00	159.00	57.70	0.00	
FH4	0.00	159.00	57.36	0.00	
10	0.00	159.00	57.36	0.00	
FH5	0.00	159.00	57.38	0.00	
13	0.00	159.00	57.28	0.00	
11	0.00	159.00	57.32	0.00	
BLDGA	9.64	159.00	57.00	0.00	
9	0.00	159.00	57.70	0.00	
2	0.00	158.90	57.60	0.00	
5	0.00	158.90	57.70	0.00	
BLDGB	7.17	158.90	57.30	0.00	
BLDGBB	1.94	158.90	57.60	0.00	
16	0.00	158.90	57.50	0.00	
BLDGC	15.14	159.00	57.15	0.00	
BLDGD	3.47	158.90	57.60	0.00	
BLDGG	11.10	158.90	57.60	0.00	
20	0.00	158.90	57.70	0.00	
12	0.00	159.00	56.89	0.00	
J01	-12.08	158.90	0.00	0.00	Reservoir
J02	-36.39	159.00	0.00	0.00	Reservoir

Link Results:

Link ID	Flow LPM	Velocity m/s	Unit Headloss m/km	Status
1	12.08	0.01	0.00	Open
2	0.00	0.00	0.00	Open
5	0.98	0.00	0.00	Open
12	-2.64	0.00	0.00	Open
16	-2.64	0.00	0.00	Open
17	0.00	0.00	0.00	Open
18	-2.64	0.00	0.00	Open
19	0.00	0.00	0.00	Open
25	9.64	0.01	0.00	Open
26	-21.25	0.01	0.01	Open
14	-2.64	0.00	0.00	Open
10	2.64	0.00	0.00	Open

4	8.97	0.00	0.00	Open

Page 3

Link Results: (continued)

Link ID	Flow LPM	VelocityUnit m/s	Headloss m/km	Status
6	8.97	0.00	0.00	Open
7	11.60	0.01	2.56	Open
9	9.11	0.01	0.00	Open
11	7.17	0.01	0.00	Open
13	1.94	0.00	0.00	Open
20	0.00	0.00	0.00	Open
27	0.00	0.00	0.00	Open
28	3.47	0.00	0.00	Open
29	2.49	0.00	0.00	Open
30	11.61	0.01	0.00	Open
31	-11.10	0.01	0.01	Open
32	12.08	0.01	0.00	Open
33	0.98	0.00	0.00	Open
3	15.14	0.01	0.00	Open
8	36.39	0.02	0.01	Open

APPENDIX C

Wastewater Collection

Functional Servicing and Stormwater Management Report
For Iber Hazeldean Land Limited

5754 Hazeldean Road / 24 Iber Road / 5734 Hazeldean Road
July 2019 – REV 12

Previously Approved Appendix C – Wastewater Collection

Iber Hazeldean Land Limited
5734-5754 Hazelden Road/24 Iber Road
Proposed Site Conditions

PREVIOUSLY APPROVED (D07-12-17-0186)

Wastewater Design Flows per Unit Count
City of Ottawa Sewer Design Guidelines, 2004

Site Area 4.437 **ha**

Extraneous Flow Allowances

Infiltration / Inflow (Dry)	**0.22**	**L/s**
Infiltration / Inflow (Wet)	**1.24**	**L/s**
Infiltration / Inflow (Total)	**1.46**	**L/s**

Institutional / Commercial / Industrial Contributions

Property Type	**Unit Rate**		**No. of Units**	**Avg Wastewater (L/s)**
Commercial floor space*	5	$L/m^2/d$	10,690	1.24
Hospitals	900	L/bed/d		0.00
School	70	L/student/d		0.00
Industrial - Light**	35,000	L/gross ha/d		0.00
Industrial - Heavy**	55,000	L/gross ha/d		0.00
			Average I/C/I Flow	**1.24**
			Peak Institutional / Commercial Flow	1.86
			Peak Industrial Flow**	0.00
			Peak I/C/I Flow	**1.86**

** assuming a 12 hour commercial operation*
*** peak industrial flow per City of Ottawa Sewer Design Guidelines Appendix 4B*

Total Estimated Average Dry Weather Flow Rate	**1.46**	**L/s**
Total Estimated Peak Dry Weather Flow Rate	**2.08**	**L/s**
Total Estimated Peak Wet Weather Flow Rate	**3.32**	**L/s**

ON-SITE SANITARY SEWER CALCULATION SHEET

PREVIOUSLY APPROVED (D07-12-17-0186)

PROJECT: **Iber Hazeldean Land Limited**
LOCATION: **5734-5754 Hazeldean Road/24 Iber Road**
FILE REF: **12-558**
DATE: **29-Mar-19**

DESIGN PARAMETERS

Commercial floor space	5 L/m²/d	Peak Fact Res. Per Harmons: Min = 2.0, Max =4.0		Infiltration / Inflow	0.33 L/s/ha
Industrial - Light	35,000 L/gross ha/d	Peak Fact. Comm.	1.5	Min. Pipe Velocity	0.60 m/s full flowing
		Peak Fact. Industrial	7	Max. Pipe Velocity	3.00 m/s full flowing
				Manning's N	0.013

Location			Residential Area and Population										Commercial		Institutional		Industrial			Infiltration				Pipe Data							
Drainage Area	Sanitary Structure		Area	Number of Units				Pop.	Cumulative		Peak.	Q_{res}	Area	Accu.	Area	Accu.	Area	Accu.	Q_{C+I+I}	Total	Accu.	Infiltration	Total	DIA	Slope	Length	$A_{hydraulic}$	R	Velocity	Q_{cap}	Q / Q full
ID	Up	Down		by type					Area	Pop.	Fact.			Area		Area		Area		Area	Area	Flow	Flow								
	Stream MH	Stream MH	(ha)	Singles	Semi's	Town's	Apt's		(ha)		(-)	(L/s)	(m^2)	(m^2)	(m^2)	(m^2)	(ha)	(ha)	(L/s)	(ha)	(ha)	(L/s)	(L/s)	(mm)	(%)	(m)	(m^2)	(m)	(m/s)	(L/s)	(-)
Building A	SAN4B	SAN4	4.437					0.0	4.437	0.0	4.00	0.00	4724.0	4724.0		0.00		0.00	0.41	4.437	4.437	1.464	1.87	250	0.23	39.9	0.049	0.063	0.58	28.5	0.07
Building C	SAN4	SAN4A	0.000					0.0	0.000	0.0	4.00	0.00		4724.0		0.00		0.00	0.41	0.000	0.000	0.000	0.41	250	0.27	33.0	0.049	0.063	0.63	30.9	0.01
	SAN4A	SAN3	0.000					0.0	4.437	0.0	4.00	0.00		4724.0		0.00		0.00	0.41	0.000	4.437	1.464	1.87	250	0.27	75.0	0.049	0.063	0.63	30.9	0.06
	SAN3	SAN2	0.000					0.0	0.000	0.0	4.00	0.00		4724.0		0.00		0.00	0.41	0.000	0.000	0.000	0.41	250	0.25	36.1	0.049	0.063	0.61	29.7	0.01
Building B, BB	SAN5	SAN2	0.000					0.0	0.000	0.0	4.00	0.00	1736.0	1736.0		0.00		0.00	0.15	0.000	0.000	0.000	0.15	250	0.25	61.5	0.049	0.063	0.61	29.7	0.01
Building D, G	SAN6	SAN2	0.000					0.0	0.000	0.0	4.00	0.00	4230.0	4230.0		0.00		0.00	0.37	0.000	0.000	0.000	0.37	250	0.24	42.0	0.049	0.063	0.59	29.1	0.01
	SAN2	SAN1	0.000					0.0	0.000	0.0	4.00	0.00		10690.0		0.00		0.00	0.93	0.000	0.000	0.000	0.93	250	0.25	77.4	0.049	0.063	0.61	29.7	0.03
	SAN1	SAN7	0.000					0.0	0.000	0.0	4.00	0.00		10690.0		0.00		0.00	0.93	0.000	0.000	0.000	0.93	250	1.00	14.3	0.049	0.063	1.21	59.5	0.02

**Refer to drawing Fig-2, Flow based on existing zoning

SANITARY SEWER CALCULATION SHEET (IBER ROAD)

PREVIOUSLY APPROVED (D07-12-17-0186)

CLIENT: **Iber Hazeldean Land Limited**
LOCATION: **Iber Road Sanitary Extension**
FILE REF: **12-558**
DATE: **28-Mar-19**

DESIGN PARAMETERS

Avg. Daily Flow Res.	280	L/p/d	Peak Fact Res. Per Harmons: Min = 2.0, Max =4.0		Infiltration / Inflow	0.33	L/s/ha
Avg. Daily Flow Comn	50,000	L/ha/d	Peak Fact. Comm.	1.5	Min. Pipe Velocity	0.60	m/s full flowing
Avg. Daily Flow Instit.	50,000	L/ha/d	Peak Fact. Instit.	1	Max. Pipe Velocity	3.00	m/s full flowing
Avg. Daily Flow Indust	35,000	L/ha/d	Peak Fact. Indust. per MOE graph		Mannings N	0.013	

Location				Residential Area and Population									Commercial		Institutional		Industrial			Infiltration				Pipe Data							
Area ID	Up	Down	Area	Number of Units				Pop.	Cumulative		Peak.	Q_{res}	Area	Accu.	Area	Accu.	Area	Accu.	Q_{C+I+I}	Total	Accu.	Infiltration	Total	DIA	Slope	Length	$A_{hydraulic}$	R	Velocity	Q_{cap}	Q / Q full
				by type					Area	Pop.	Fact.			Area		Area		Area		Area	Area	Flow	Flow								
			(ha)	Singles	Semi's	Town's	Apt's		(ha)		(-)	(L/s)	(ha)	(ha)	(ha)	(ha)	(ha)	(ha)	(L/s)	(ha)	(ha)	(L/s)	(L/s)	(mm)	(%)	(m)	(m^2)	(m)	(m/s)	(L/s)	(-)
S5,S6	FUT.SAN8	SAN7	2.410					0.0	2.410	0.0	4.00	0.00	0.00	0.00		0.00	2.41	2.41	2.0	2.410	2.410	0.795	2.75	250	0.50	41.9	0.049	0.063	0.86	42.0	0.07
S1,S2	SAN7	EX.MH3A	6.677					0.0	9.087	0.0	4.00	0.00	1.07	1.07		0.00	2.24	4.65	4.7	9.087	9.087	2.999	7.69	250	0.50	42.1	0.049	0.063	0.86	42.0	0.18
S3,S4	EX.MH3A	EX.MH4A	1.449					0.0	10.536	0.0	4.00	0.00	0.00	0.00		0.00	1.45	6.10	4.9	10.536	10.536	3.477	8.42	250	0.28	40.0	0.049	0.063	0.64	31.5	0.27

Commercial Peaking Factor and Infiltration/Inflow from Technical Bulletin ISTB-2018-01.
****EX.MH3A to EX.MH4A Per As Built 1313-28 dated June 2009 by Novatech Engineering Consultants Ltd.***

Refer to drawing SAN-1 for Sanitary Drainage Area Plan indicated by the Sanitary Extension Design Brief prepared by DSEL dated November 16, 2018 and included in Appendix C for reference.

Site Servicing and Stormwater Management Brief
For Iber Hazeldean Land Limited

5754 Hazeldean Road / 24 Iber Road / 5734 Hazeldean Road
September 2019 – REV 1

Proposed Amended Appendix C – Wastewater Collection

Wastewater Design Flows per Unit Count
City of Ottawa Sewer Design Guidelines, 2004

Site Area 4.437 **ha**

Extraneous Flow Allowances

Infiltration / Inflow (Dry)	**0.22**	**L/s**
Infiltration / Inflow (Wet)	**1.24**	**L/s**
Infiltration / Inflow (Total)	**1.46**	**L/s**

Institutional / Commercial / Industrial Contributions

Property Type	**Unit Rate**		**No. of Units**	**Avg Wastewater (L/s)**
Commercial floor space*	5	$L/m^2/d$	10,337	1.20
Hospitals	900	L/bed/d		0.00
School	70	L/student/d		0.00
Industrial - Light**	35,000	L/gross ha/d		0.00
Industrial - Heavy**	55,000	L/gross ha/d		0.00
			Average I/C/I Flow	**1.20**
			Peak Institutional / Commercial Flow	1.79
			Peak Industrial Flow**	0.00
			Peak I/C/I Flow	**1.79**

** assuming a 12 hour commercial operation*
*** peak industrial flow per City of Ottawa Sewer Design Guidelines Appendix 4B*

Total Estimated Average Dry Weather Flow Rate	**1.42**	**L/s**
Total Estimated Peak Dry Weather Flow Rate	**2.02**	**L/s**
Total Estimated Peak Wet Weather Flow Rate	**3.26**	**L/s**

ON-SITE SANITARY SEWER CALCULATION SHEET

PROJECT: **Unity Square Limited Partnership**
LOCATION: **5734-5754 Hazeldean Road/24 Iber Road**
FILE REF: **19-1133**
DATE: **20-Sep-19**

DESIGN PARAMETERS

Commercial floor space	5	$L/m^2/d$	Peak Fact Res. Per Harmons: Min = 2.0, Max =4.0		Infiltration / Inflow	0.33	L/s/ha
Industrial - Light	35,000	L/gross ha/d	Peak Fact. Comm.	1.5	Min. Pipe Velocity	0.60	m/s full flowing
			Peak Fact. Industrial	7	Max. Pipe Velocity	3.00	m/s full flowing
					Manning's N	0.013	

Location			Residential Area and Population										Commercial		Institutional		Industrial			Infiltration				Pipe Data							
Drainage Area	Sanitary Structure		Area	Number of Units				Pop.	Cumulative		Peak.	Q_{res}	Area	Accu.	Area	Accu.	Area	Accu.	Q_{C+I+I}	Total	Accu.	Infiltration	Total	DIA	Slope	Length	$A_{hydraulic}$	R	Velocity	Q_{cap}	Q / Q full
ID	Up	Down		by type					Area	Pop.	Fact.			Area		Area		Area		Area	Area	Flow	Flow								
	Stream MH	Stream MH	(ha)	Singles	Semi's	Town's	Apt's		(ha)		(-)	(L/s)	(m^2)	(m^2)	(m^2)	(m^2)	(ha)	(ha)	(L/s)	(ha)	(ha)	(L/s)	(L/s)	(mm)	(%)	(m)	(m^2)	(m)	(m/s)	(L/s)	(-)
Building A	SAN4B	SAN4	4.437					0.0	4.437	0.0	4.00	0.00	4724.0	4724.0		0.00		0.00	0.41	4.437	4.437	1.464	1.87	250	0.23	39.9	0.049	0.063	0.58	28.5	0.07
Building C	SAN4	SAN4A	0.000					0.0	0.000	0.0	4.00	0.00		4724.0		0.00		0.00	0.41	0.000	0.000	0.000	0.41	250	0.27	33.0	0.049	0.063	0.63	30.9	0.01
	SAN4A	SAN3	0.000					0.0	4.437	0.0	4.00	0.00		4724.0		0.00		0.00	0.41	0.000	4.437	1.464	1.87	250	0.27	75.0	0.049	0.063	0.63	30.9	0.06
	SAN3	SAN2	0.000					0.0	0.000	0.0	4.00	0.00		4724.0		0.00		0.00	0.41	0.000	0.000	0.000	0.41	250	0.25	36.1	0.049	0.063	0.61	29.7	0.01
Building B, BB	SAN5	SAN2	0.000					0.0	0.000	0.0	4.00	0.00	1736.0	1736.0		0.00		0.00	0.15	0.000	0.000	0.000	0.15	250	0.25	61.5	0.049	0.063	0.61	29.7	0.01
Building D, G	SAN6	SAN2	0.000					0.0	0.000	0.0	4.00	0.00	2602.4	2602.4		0.00		0.00	0.23	0.000	0.000	0.000	0.23	250	0.24	42.0	0.049	0.063	0.59	29.1	0.01
	SAN2	SAN1	0.000					0.0	0.000	0.0	4.00	0.00		9062.4		0.00		0.00	0.79	0.000	0.000	0.000	0.79	250	0.25	77.4	0.049	0.063	0.61	29.7	0.03
	SAN1	SAN7	0.000					0.0	0.000	0.0	4.00	0.00		9062.4		0.00		0.00	0.79	0.000	0.000	0.000	0.79	250	1.00	14.3	0.049	0.063	1.21	59.5	0.01

**Refer to drawing Fig-2, Flow based on existing zoning

APPENDIX D

Stormwater Management

Functional Servicing and Stormwater Management Report
For Iber Hazeldean Land Limited

5754 Hazeldean Road / 24 Iber Road / 5734 Hazeldean Road
July 2019 – REV 12

Previously Approved Appendix D – Stormwater Management

5734-5754 Hazeldean Road/24 Iber Road
Existing Site Conditions

PREVIOUSLY APPROVED (D07-12-17-0186)

Estimated Peak Stormwater Flow Rate
City of Ottawa Sewer Design Guidelines, 2004

Existing Drainage Area Charateristics

Area	4.44	ha
C	0.33	Rational Method runoff coefficient
t_c	21.4	min

Rational Method Coefficient

	Imp.	Perv.	Total
Area	0.301	4.136	4.437
C*	0.7	0.3	0.33

Estimated Peak Flow

	2-year	5-year	100-year	
i	49.9	67.4	115.0	mm/hr
Q	201.3	271.6	463.6	L/s

* C value calculated as a composite value based on existing site soil conditions and topography.
value derived using Table 5.7 Runoff Coefficients for Various Soil Conditions from the Ottawa Sewer Design Guidelines,

Drainage Basin Characteristics

Area ID	
A (ha)	4.44
L (m)	232
Up Elev	104.44
Dn Elev	101.71
S (%)	1.2
CN (-)	83
Tc (min)	21.4

Time of Concentration per SCS lag equation

$$t_c = \frac{100L^{0.8}\left[\left(\frac{1000}{CN}\right)-9\right]^{0.7}}{1900S^{0.5}}$$

L, length in ft
CN, SCS runoff curve number
S, average watershed slope in (%)

PREVIOUSLY APPROVED (D07-12-17-0186)

Stormwater - Proposed Development
City of Ottawa Sewer Design Guidelines, 2012

Target Flow Rate

Site Area 4.44 ha
C 0.74 Rational Method runoff coefficient

	5-year			100-year	
t_c (min)	i (mm/hr)	Q_{actual} (L/s)	i (mm/hr)	Q_{actual} (L/s)
21.4	67.4	271.6	115.0	463.6

Estimated Post Development Peak Flow from Unattenuated Areas

Area ID U1
Total Area 0.679 ha
C 0.24 Rational Method runoff coefficient

	5-year					100-year				
t_c (min)	i (mm/hr)	Q_{actual} (L/s)	$Q_{release}$ (L/s)	Q_{stored} (L/s)	V_{stored} (m^3)	i (mm/hr)	Q_{actual} (L/s)	$Q_{release}$ (L/s)	Q_{stored} (L/s)	V_{stored} (m^3)
15.1	83.2	37.3	37.3	0.0	0.0	142.4	79.7	79.7	0.0	0.0

Area ID U2
Total Area 0.079 ha
C 0.59 Rational Method runoff coefficient

	5-year					100-year				
t_c (min)	i (mm/hr)	Q_{actual} (L/s)	$Q_{release}$ (L/s)	Q_{stored} (L/s)	V_{stored} (m^3)	i (mm/hr)	Q_{actual} (L/s)	$Q_{release}$ (L/s)	Q_{stored} (L/s)	V_{stored} (m^3)
15.1	83.2	10.6	10.6	0.0	0.0	142.4	22.7	22.7	0.0	0.0

Area ID U3
Total Area 0.015 ha
C 0.90 Rational Method runoff coefficient

	5-year					100-year				
t_c (min)	i (mm/hr)	Q_{actual} (L/s)	$Q_{release}$ (L/s)	Q_{stored} (L/s)	V_{stored} (m^3)	i (mm/hr)	Q_{actual} (L/s)	$Q_{release}$ (L/s)	Q_{stored} (L/s)	V_{stored} (m^3)
15.1	83.2	3.2	3.2	0.0	0.0	142.4	6.1	6.1	0.0	0.0

5734-5754 Hazeldean Road/24 Iber Road
Proposed Site Conditions

PREVIOUSLY APPROVED (D07-12-17-0186)

Estimated Post Development Storage Requirement

Building ID	**BLDG A**	
Roof Area	0.190	ha
Avail Storage Area	0.180	
C	0.90	Rational Method runoff coefficient
t_c	10	min, tc at outlet without restriction

Note: Rational Method Coefficient "C" increased by 25% for 100-year calculations

Estimated Number of Roof Drains

Building Length	86.6	
Building Width	22.3	
Number of Drains	9	
m^2 / Drain	200.1	max 232.25m^2/notch as recommended by Zurn for Ottawa

Roof Top Rating Curve per Zurn Model Z-105-5

d (m)	A (m^2)	V_{acc} (m^3)	V_{avail} (m^3)	Q_{notch} (L/s)	Q_{roof} (L/s)	$V_{drawdown}$ (hr)
0.000	0	0.0	0.0	0.00	0.00	0.00
0.025	112.6	0.9	0.9	0.38	3.42	0.08
0.050	450.3	6.6	7.5	0.77	6.93	0.34
0.075	1013.1	17.8	25.3	1.14	10.26	0.82
0.100	1801.0	34.7	60.0	1.52	13.68	1.53
0.125	1801.0	45.0	105.1	1.90	17.10	2.26
0.150	1801.0	45.0	150.1	2.28	20.52	2.87

* Assumes one notch opening per drain, assumes maximum slope of 10cm

	5-year					100-year				
t_c (min)	i (mm/hr)	Q_{actual} (L/s)	$Q_{release}$ (L/s)	Q_{stored} (L/s)	V_{stored} (m^3)	i (mm/hr)	Q_{actual} (L/s)	$Q_{release}$ (L/s)	Q_{stored} (L/s)	V_{stored} (m^3)
10	104.2	49.4	10.5	38.9	23.3	178.6	94.0	13.8	80.2	48.1
15	83.6	39.6	10.5	29.1	26.2	142.9	75.3	13.8	61.4	55.3
20	70.3	33.3	10.5	22.8	27.4	120.0	63.2	13.8	49.3	59.2
25	60.9	28.9	10.5	18.4	27.6	103.8	54.7	13.8	40.8	61.3
30	53.9	25.6	10.5	15.1	27.1	91.9	48.4	13.8	34.5	62.2
35	48.5	23.0	10.5	12.5	26.3	82.6	43.5	13.8	29.6	62.2
40	44.2	20.9	10.5	10.5	25.1	75.1	39.6	13.8	25.7	61.7
45	40.6	19.3	10.5	8.8	23.7	69.1	36.4	13.8	22.5	60.8
50	37.7	17.8	10.5	7.4	22.1	64.0	33.7	13.8	19.8	59.5
55	35.1	16.6	10.5	6.2	20.3	59.6	31.4	13.8	17.6	57.9
60	32.9	15.6	10.5	5.1	18.5	55.9	29.4	13.8	15.6	56.1
65	31.0	14.7	10.5	4.2	16.5	52.6	27.7	13.8	13.9	54.1
70	29.4	13.9	10.5	3.4	14.4	49.8	26.2	13.8	12.4	52.0
75	27.9	13.2	10.5	2.7	12.3	47.3	24.9	13.8	11.0	49.7
80	26.6	12.6	10.5	2.1	10.1	45.0	23.7	13.8	9.8	47.3
85	25.4	12.0	10.5	1.5	7.9	43.0	22.6	13.8	8.8	44.7
90	24.3	11.5	10.5	1.0	5.6	41.1	21.6	13.8	7.8	42.1
95	23.3	11.0	10.5	0.6	3.2	39.4	20.8	13.8	6.9	39.4
100	22.4	10.6	10.5	0.1	0.8	37.9	20.0	13.8	6.1	36.7
105	21.6	10.2	10.2	0.0	0.0	36.5	19.2	13.8	5.4	33.8
110	20.8	9.9	9.9	0.0	0.0	35.2	18.5	13.8	4.7	31.0

5-year Q_{roof}	**10.48 L/s**		**100-year Q_{roof}**	**13.85 L/s**
5-year Max. Storage Required	**27.6 m^3**		**100-year Max. Storage Required**	**62.2 m^3**
5-year Storage Depth	**0.077 m**		**100-year Storage Depth**	**0.101 m**
5-year Estimated Drawdown Time	**0.87 hr**		**100-year Estimated Drawdown Time**	**1.56 hr**

5734-5754 Hazeldean Road/24 Iber Road
Proposed Site Conditions

PREVIOUSLY APPROVED (D07-12-17-0186)

Building ID	**BLDG B**	
Roof Area	0.140	ha
Avail Storage Area	0.133	
C	0.90	Rational Method runoff coefficient
t_c	10	min, tc at outlet without restriction

Note: Rational Method Coefficient "C" increased by 25% for 100-year calculations

Estimated Number of Roof Drains

Building Length	58.0	
Building Width	24.0	
Number of Drains	6	
m^2 / Drain	222.3	max 232.25m^2/notch as recommended by Zurn for Ottawa

Roof Top Rating Curve per Zurn Model Z-105-5

d (m)	A (m^2)	V_{acc} (m^3)	V_{avail} (m^3)	Q_{notch} (L/s)	Q_{roof} (L/s)	$V_{drawdown}$ (hr)
0.000	0	0.0	0.0	0.00	0.00	0.00
0.025	83.4	0.7	0.7	0.38	2.28	0.08
0.050	333.5	4.9	5.6	0.77	4.62	0.38
0.075	750.3	13.2	18.8	1.14	6.84	0.91
0.100	1333.9	25.7	44.5	1.52	9.12	1.70
0.125	1333.9	33.3	77.8	1.90	11.40	2.51
0.150	1333.9	33.3	111.2	2.28	13.68	3.19

* Assumes one notch opening per drain, assumes maximum slope of 10cm

	5-year					100-year				
t_c (min)	i (mm/hr)	Q_{actual} (L/s)	$Q_{release}$ (L/s)	Q_{stored} (L/s)	V_{stored} (m^3)	i (mm/hr)	Q_{actual} (L/s)	$Q_{release}$ (L/s)	Q_{stored} (L/s)	V_{stored} (m^3)
10	104.2	36.6	7.1	29.5	17.7	178.6	69.6	9.4	60.3	36.2
15	83.6	29.3	7.1	22.3	20.0	142.9	55.7	9.4	46.4	41.7
20	70.3	24.7	7.1	17.6	21.1	120.0	46.8	9.4	37.4	44.9
25	60.9	21.4	7.1	14.3	21.4	103.8	40.5	9.4	31.1	46.7
30	53.9	18.9	7.1	11.9	21.3	91.9	35.8	9.4	26.5	47.6
35	48.5	17.0	7.1	10.0	20.9	82.6	32.2	9.4	22.8	48.0
40	44.2	15.5	7.1	8.4	20.2	75.1	29.3	9.4	19.9	47.9
45	40.6	14.3	7.1	7.2	19.4	69.1	26.9	9.4	17.6	47.4
50	37.7	13.2	7.1	6.1	18.4	64.0	24.9	9.4	15.6	46.8
55	35.1	12.3	7.1	5.3	17.3	59.6	23.3	9.4	13.9	45.9
60	32.9	11.6	7.1	4.5	16.1	55.9	21.8	9.4	12.4	44.8
65	31.0	10.9	7.1	3.8	14.9	52.6	20.5	9.4	11.2	43.6
70	29.4	10.3	7.1	3.2	13.6	49.8	19.4	9.4	10.1	42.2
75	27.9	9.8	7.1	2.7	12.2	47.3	18.4	9.4	9.1	40.8
80	26.6	9.3	7.1	2.2	10.8	45.0	17.5	9.4	8.2	39.3
85	25.4	8.9	7.1	1.8	9.3	43.0	16.8	9.4	7.4	37.7
90	24.3	8.5	7.1	1.4	7.8	41.1	16.0	9.4	6.7	36.0
95	23.3	8.2	7.1	1.1	6.3	39.4	15.4	9.4	6.0	34.3
100	22.4	7.9	7.1	0.8	4.7	37.9	14.8	9.4	5.4	32.5
105	21.6	7.6	7.1	0.5	3.1	36.5	14.2	9.4	4.9	30.7
110	20.8	7.3	7.1	0.2	1.5	35.2	13.7	9.4	4.4	28.8

5-year Q_{roof}	**7.08**	**L/s**	**100-year Q_{roof}**	**9.36**	**L/s**
5-year Max. Storage Required	**21.4**	**m^3**	**100-year Max. Storage Required**	**48.0**	**m^3**
5-year Storage Depth	**0.078**	**m**	**100-year Storage Depth**	**0.103**	**m**
5-year Estimated Drawdown Time	**1.00**	**hr**	**100-year Estimated Drawdown Time**	**1.78**	**hr**

5734-5754 Hazeldean Road/24 Iber Road
Proposed Site Conditions

PREVIOUSLY APPROVED (D07-12-17-0186)

Building ID	**BLDG BB**	
Roof Area	0.041	ha
Avail Storage Area	0.039	
C	0.90	Rational Method runoff coefficient
t_c	10	min, tc at outlet without restriction

Note: Rational Method Coefficient "C" increased by 25% for 100-year calculations

Estimated Number of Roof Drains

Building Length	15.5	
Building Width	24.0	
Number of Drains	2	
m^2 / Drain	194.7	max 232.25m^2/notch as recommended by Zurn for Ottawa

Roof Top Rating Curve per Zurn Model Z-105-5

d (m)	A (m^2)	V_{acc} (m^3)	V_{avail} (m^3)	Q_{notch} (L/s)	Q_{roof} (L/s)	$V_{drawdown}$ (hr)
0.000	0	0.0	0.0	0.00	0.00	0.00
0.025	24.3	0.2	0.2	0.38	0.76	0.07
0.050	97.3	1.4	1.6	0.77	1.54	0.33
0.075	219.0	3.9	5.5	1.14	2.28	0.80
0.100	389.3	7.5	13.0	1.52	3.04	1.49
0.125	389.3	9.7	22.7	1.90	3.80	2.20
0.150	389.3	9.7	32.4	2.28	4.56	2.79

* Assumes one notch opening per drain, assumes maximum slope of 10cm

	5-year					100-year				
t_c (min)	i (mm/hr)	Q_{actual} (L/s)	$Q_{release}$ (L/s)	Q_{stored} (L/s)	V_{stored} (m^3)	i (mm/hr)	Q_{actual} (L/s)	$Q_{release}$ (L/s)	Q_{stored} (L/s)	V_{stored} (m^3)
10	104.2	10.7	2.3	8.4	5.0	178.6	20.3	3.1	17.3	10.4
15	83.6	8.6	2.3	6.2	5.6	142.9	16.3	3.1	13.2	11.9
20	70.3	7.2	2.3	4.9	5.9	120.0	13.7	3.1	10.6	12.7
25	60.9	6.2	2.3	3.9	5.9	103.8	11.8	3.1	8.8	13.1
30	53.9	5.5	2.3	3.2	5.8	91.9	10.5	3.1	7.4	13.3
35	48.5	5.0	2.3	2.7	5.6	82.6	9.4	3.1	6.3	13.3
40	44.2	4.5	2.3	2.2	5.3	75.1	8.6	3.1	5.5	13.2
45	40.6	4.2	2.3	1.8	5.0	69.1	7.9	3.1	4.8	12.9
50	37.7	3.9	2.3	1.5	4.6	64.0	7.3	3.1	4.2	12.6
55	35.1	3.6	2.3	1.3	4.2	59.6	6.8	3.1	3.7	12.3
60	32.9	3.4	2.3	1.1	3.8	55.9	6.4	3.1	3.3	11.9
65	31.0	3.2	2.3	0.9	3.4	52.6	6.0	3.1	2.9	11.4
70	29.4	3.0	2.3	0.7	2.9	49.8	5.7	3.1	2.6	10.9
75	27.9	2.9	2.3	0.5	2.4	47.3	5.4	3.1	2.3	10.4
80	26.6	2.7	2.3	0.4	1.9	45.0	5.1	3.1	2.1	9.9
85	25.4	2.6	2.3	0.3	1.4	43.0	4.9	3.1	1.8	9.3
90	24.3	2.5	2.3	0.2	0.9	41.1	4.7	3.1	1.6	8.7
95	23.3	2.4	2.3	0.1	0.4	39.4	4.5	3.1	1.4	8.1
100	22.4	2.3	2.3	0.0	0.0	37.9	4.3	3.1	1.2	7.5
105	21.6	2.2	2.2	0.0	0.0	36.5	4.2	3.1	1.1	6.9
110	20.8	2.1	2.1	0.0	0.0	35.2	4.0	3.1	0.9	6.2

5-year Q_{roof}	**2.32 L/s**	**100-year Q_{roof}**	**3.07 L/s**
5-year Max. Storage Required	**5.9 m^3**	**100-year Max. Storage Required**	**13.3 m^3**
5-year Storage Depth	**0.076 m**	**100-year Storage Depth**	**0.101 m**
5-year Estimated Drawdown Time	**0.84 hr**	**100-year Estimated Drawdown Time**	**1.51 hr**

5734-5754 Hazeldean Road/24 Iber Road
Proposed Site Conditions

PREVIOUSLY APPROVED (D07-12-17-0186)

Building ID	**BLDG C**	
Roof Area	0.288	ha
Avail Storage Area	0.274	
C	0.90	Rational Method runoff coefficient
t_c	10	min, tc at outlet without restriction

Note: Rational Method Coefficient "C" increased by 25% for 100-year calculations

Estimated Number of Roof Drains

Building Length	64.2	
Building Width	43.8	
Number of Drains	12	
m^2 / Drain	228.4	max 232.25m^2/notch as recommended by Zurn for Ottawa

Roof Top Rating Curve per Zurn Model Z-105-5

d (m)	A (m^2)	V_{acc} (m^3)	V_{avail} (m^3)	Q_{notch} (L/s)	Q_{roof} (L/s)	$V_{drawdown}$ (hr)
0.000	0	0.0	0.0	0.00	0.00	0.00
0.025	171.3	1.4	1.4	0.38	4.56	0.09
0.050	685.1	10.0	11.4	0.77	9.24	0.39
0.075	1541.4	27.1	38.5	1.14	13.68	0.94
0.100	2740.3	52.8	91.3	1.52	18.24	1.74
0.125	2740.3	68.5	159.9	1.90	22.80	2.58
0.150	2740.3	68.5	228.4	2.28	27.36	3.27

* Assumes one notch opening per drain, assumes maximum slope of 10cm

	5-year					100-year				
t_c (min)	i (mm/hr)	Q_{actual} (L/s)	$Q_{release}$ (L/s)	Q_{stored} (L/s)	V_{stored} (m^3)	i (mm/hr)	Q_{actual} (L/s)	$Q_{release}$ (L/s)	Q_{stored} (L/s)	V_{stored} (m^3)
10	104.2	75.1	14.2	60.9	36.6	178.6	143.1	18.8	124.3	74.6
15	83.6	60.3	14.2	46.1	41.4	142.9	114.5	18.8	95.7	86.1
20	70.3	50.7	14.2	36.5	43.8	120.0	96.1	18.8	77.3	92.8
25	60.9	43.9	14.2	29.7	44.6	103.8	83.2	18.8	64.4	96.6
30	53.9	38.9	14.2	24.7	44.4	91.9	73.6	18.8	54.8	98.7
35	48.5	35.0	14.2	20.8	43.7	82.6	66.2	18.8	47.4	99.5
40	44.2	31.9	14.2	17.7	42.4	75.1	60.2	18.8	41.4	99.4
45	40.6	29.3	14.2	15.1	40.8	69.1	55.3	18.8	36.5	98.7
50	37.7	27.2	14.2	13.0	38.9	64.0	51.2	18.8	32.5	97.4
55	35.1	25.3	14.2	11.1	36.7	59.6	47.8	18.8	29.0	95.7
60	32.9	23.8	14.2	9.6	34.4	55.9	44.8	18.8	26.0	93.6
65	31.0	22.4	14.2	8.2	31.9	52.6	42.2	18.8	23.4	91.3
70	29.4	21.2	14.2	7.0	29.3	49.8	39.9	18.8	21.1	88.7
75	27.9	20.1	14.2	5.9	26.6	47.3	37.9	18.8	19.1	85.9
80	26.6	19.2	14.2	5.0	23.8	45.0	36.0	18.8	17.3	82.9
85	25.4	18.3	14.2	4.1	20.9	43.0	34.4	18.8	15.6	79.7
90	24.3	17.5	14.2	3.3	17.9	41.1	32.9	18.8	14.2	76.4
95	23.3	16.8	14.2	2.6	14.8	39.4	31.6	18.8	12.8	73.0
100	22.4	16.2	14.2	2.0	11.7	37.9	30.4	18.8	11.6	69.5
105	21.6	15.6	14.2	1.4	8.6	36.5	29.2	18.8	10.5	65.9
110	20.8	15.0	14.2	0.8	5.4	35.2	28.2	18.8	9.4	62.2

5-year Q_{roof}	**14.20**	**L/s**	**100-year Q_{roof}**	**18.78**	**L/s**
5-year Max. Storage Required	**44.6**	**m^3**	**100-year Max. Storage Required**	**99.5**	**m^3**
5-year Storage Depth	**0.078**	**m**	**100-year Storage Depth**	**0.103**	**m**
5-year Estimated Drawdown Time	**1.03**	**hr**	**100-year Estimated Drawdown Time**	**1.84**	**hr**

5734-5754 Hazeldean Road/24 Iber Road
Proposed Site Conditions

PREVIOUSLY APPROVED (D07-12-17-0186)

Building ID	**BLDG D**	
Roof Area	0.101	ha
Avail Storage Area	0.096	
C	0.90	Rational Method runoff coefficient
t_c	10	min, tc at outlet without restriction

Note: Rational Method Coefficient "C" increased by 25% for 100-year calculations

Estimated Number of Roof Drains		
Building Length	20.2	
Building Width	53.1	
Number of Drains	5	
m^2 / Drain	192.7	max 232.25m^2/notch as recommended by Zurn for Ottawa

Roof Top Rating Curve per Zurn Model Z-105-5

d (m)	A (m^2)	V_{acc} (m^3)	V_{avail} (m^3)	Q_{notch} (L/s)	Q_{roof} (L/s)	$V_{drawdown}$ (hr)
0.000	0	0.0	0.0	0.00	0.00	0.00
0.025	60.2	0.5	0.5	0.38	1.90	0.07
0.050	240.9	3.5	4.0	0.77	3.85	0.33
0.075	542.0	9.5	13.6	1.14	5.70	0.79
0.100	963.6	18.6	32.1	1.52	7.60	1.47
0.125	963.6	24.1	56.2	1.90	9.50	2.17
0.150	963.6	24.1	80.3	2.28	11.40	2.76

* Assumes one notch opening per drain, assumes maximum slope of 10cm

	5-year					100-year				
t_c (min)	i (mm/hr)	Q_{actual} (L/s)	$Q_{release}$ (L/s)	Q_{stored} (L/s)	V_{stored} (m^3)	i (mm/hr)	Q_{actual} (L/s)	$Q_{release}$ (L/s)	Q_{stored} (L/s)	V_{stored} (m^3)
10	104.2	26.4	5.8	20.6	12.4	178.6	50.3	7.7	42.7	25.6
15	83.6	21.2	5.8	15.4	13.9	142.9	40.3	7.7	32.6	29.3
20	70.3	17.8	5.8	12.0	14.4	120.0	33.8	7.7	26.1	31.4
25	60.9	15.4	5.8	9.6	14.5	103.8	29.3	7.7	21.6	32.4
30	53.9	13.7	5.8	7.9	14.2	91.9	25.9	7.7	18.2	32.8
35	48.5	12.3	5.8	6.5	13.7	82.6	23.3	7.7	15.6	32.8
40	44.2	11.2	5.8	5.4	13.0	75.1	21.2	7.7	13.5	32.4
45	40.6	10.3	5.8	4.5	12.2	69.1	19.5	7.7	11.8	31.9
50	37.7	9.5	5.8	3.8	11.3	64.0	18.0	7.7	10.4	31.1
55	35.1	8.9	5.8	3.1	10.3	59.6	16.8	7.7	9.1	30.2
60	32.9	8.4	5.8	2.6	9.2	55.9	15.7	7.7	8.1	29.1
65	31.0	7.9	5.8	2.1	8.1	52.6	14.8	7.7	7.2	28.0
70	29.4	7.4	5.8	1.7	6.9	49.8	14.0	7.7	6.4	26.8
75	27.9	7.1	5.8	1.3	5.8	47.3	13.3	7.7	5.7	25.5
80	26.6	6.7	5.8	0.9	4.5	45.0	12.7	7.7	5.0	24.1
85	25.4	6.4	5.8	0.6	3.3	43.0	12.1	7.7	4.4	22.7
90	24.3	6.2	5.8	0.4	2.0	41.1	11.6	7.7	3.9	21.2
95	23.3	5.9	5.8	0.1	0.7	39.4	11.1	7.7	3.5	19.7
100	22.4	5.7	5.7	0.0	0.0	37.9	10.7	7.7	3.0	18.1
105	21.6	5.5	5.5	0.0	0.0	36.5	10.3	7.7	2.6	16.6
110	20.8	5.3	5.3	0.0	0.0	35.2	9.9	7.7	2.3	14.9

5-year Q_{roof}	**5.79 L/s**	**100-year Q_{roof}**	**7.65 L/s**
5-year Max. Storage Required	**14.5 m^3**	**100-year Max. Storage Required**	**32.8 m^3**
5-year Storage Depth	**0.076 m**	**100-year Storage Depth**	**0.101 m**
5-year Estimated Drawdown Time	**0.83 hr**	**100-year Estimated Drawdown Time**	**1.49 hr**

5734-5754 Hazeldean Road/24 Iber Road
Proposed Site Conditions

PREVIOUSLY APPROVED (D07-12-17-0186)

Building ID	UT. BLDG G	
Roof Area	0.097	ha
Avail Storage Area	0.092	
C	0.90	Rational Method runoff coefficient
t_c	10	min, tc at outlet without restriction

Note: Rational Method Coefficient "C" increased by 25% for 100-year calculations

Estimated Number of Roof Drains		
Building Length	20.2	
Building Width	53.1	
Number of Drains	5	
m^2 / Drain	184.4	max 232.25m^2/notch as recommended by Zurn for Ottawa

Roof Top Rating Curve per Zurn Model Z-105-5

d (m)	A (m^2)	V_{acc} (m^3)	V_{avail} (m^3)	Q_{notch} (L/s)	Q_{roof} (L/s)	$V_{drawdown}$ (hr)
0.000	0	0.0	0.0	0.00	0.00	0.00
0.025	57.6	0.5	0.5	0.38	1.90	0.07
0.050	230.4	3.4	3.8	0.77	3.85	0.31
0.075	518.5	9.1	13.0	1.14	5.70	0.76
0.100	921.8	17.8	30.7	1.52	7.60	1.41
0.125	921.8	23.0	53.8	1.90	9.50	2.08
0.150	921.8	23.0	76.8	2.28	11.40	2.64

* Assumes one notch opening per drain, assumes maximum slope of 10cm

	5-year					100-year				
t_c (min)	i (mm/hr)	Q_{actual} (L/s)	$Q_{release}$ (L/s)	Q_{stored} (L/s)	V_{stored} (m^3)	i (mm/hr)	Q_{actual} (L/s)	$Q_{release}$ (L/s)	Q_{stored} (L/s)	V_{stored} (m^3)
10	104.2	25.3	5.8	19.5	11.7	178.6	48.1	7.6	40.5	24.3
15	83.6	20.3	5.8	14.5	13.1	142.9	38.5	7.6	30.9	27.8
20	70.3	17.0	5.8	11.3	13.5	120.0	32.3	7.6	24.7	29.7
25	60.9	14.8	5.8	9.0	13.5	103.8	28.0	7.6	20.4	30.6
30	53.9	13.1	5.8	7.3	13.2	91.9	24.8	7.6	17.1	30.9
35	48.5	11.8	5.8	6.0	12.6	82.6	22.3	7.6	14.6	30.8
40	44.2	10.7	5.8	5.0	11.9	75.1	20.3	7.6	12.6	30.3
45	40.6	9.9	5.8	4.1	11.1	69.1	18.6	7.6	11.0	29.7
50	37.7	9.1	5.8	3.4	10.1	64.0	17.2	7.6	9.6	28.9
55	35.1	8.5	5.8	2.8	9.1	59.6	16.1	7.6	8.5	27.9
60	32.9	8.0	5.8	2.2	8.0	55.9	15.1	7.6	7.5	26.8
65	31.0	7.5	5.8	1.8	6.9	52.6	14.2	7.6	6.6	25.7
70	29.4	7.1	5.8	1.4	5.7	49.8	13.4	7.6	5.8	24.4
75	27.9	6.8	5.8	1.0	4.5	47.3	12.7	7.6	5.1	23.1
80	26.6	6.4	5.8	0.7	3.3	45.0	12.1	7.6	4.5	21.7
85	25.4	6.2	5.8	0.4	2.0	43.0	11.6	7.6	4.0	20.2
90	24.3	5.9	5.8	0.1	0.7	41.1	11.1	7.6	3.5	18.7
95	23.3	5.7	5.7	0.0	0.0	39.4	10.6	7.6	3.0	17.2
100	22.4	5.4	5.4	0.0	0.0	37.9	10.2	7.6	2.6	15.6
105	21.6	5.2	5.2	0.0	0.0	36.5	9.8	7.6	2.2	14.0
110	20.8	5.1	5.1	0.0	0.0	35.2	9.5	7.6	1.9	12.4

5-year Q_{roof}	**5.76 L/s**	**100-year Q_{roof}**	**7.61 L/s**
5-year Max. Storage Required	**13.5 m^3**	**100-year Max. Storage Required**	**30.9 m^3**
5-year Storage Depth	**0.076 m**	**100-year Storage Depth**	**0.100 m**
5-year Estimated Drawdown Time	**0.78 hr**	**100-year Estimated Drawdown Time**	**1.41 hr**

PREVIOUSLY APPROVED (D07-12-17-0186)

Estimated Post Development Peak Flow from Attenuated Areas

Area ID A
Available Sub-surface Storage

Total U/G Storage Volume (m^3) 76.0

Stage Attenuated Areas Storage Summary

		Surface Storage			Surface and Subsurface Storage			
	Stage	Ponding	h_o	delta d	V*	V_{acc}**	$Q_{release}$†	$V_{drawdown}$
	(m)	(m^2)	(m)	(m)	(m^3)	(m^3)	(L/s)	(hr)
Orifice INV	101.44	-	0.00			0.0	0.0	0.00
Cistern INV	101.99	-	0.55	0.55	38.0	38.0	133.3	0.08
Cistern OBV	102.63	-	1.19	0.64	38.0	76.0	195.6	0.11
T/L1	103.25	0.4	1.81	0.63	0.1	76.1	241.8	0.09
T/L2	103.30	150.3	1.86	0.05	2.6	78.7	245.1	0.09
T/L3	103.35	795.8	1.91	0.05	21.5	100.3	248.4	0.11
0.15m Ponding	103.40	2067.2	1.96	0.05	69.1	169.3	251.6	0.19
Max Ponding	103.55	8923.7	2.11	0.15	764.3	933.6	261.0	0.99

* V=Incremental storage volume
**V_{acc}=Total surface and sub-surface
† $Q_{release}$ = Release rate calculated from orifice equation

$$Q = C_d \times A \times \sqrt{2 \times g \times h_o}$$

Where Q = *Release rate (cms)*
C_d = *Discharge Coefficient (0.61)*
A = *Area of the orifice(m^2)*
g = *gravitational constant (9.81m/s^2)*
$h_{o\,eff}$ = *Effective head above the orifice due to waterlevel at outlet*

Orifice Location **STM101** **Dia** 291
Total Area 2.81 ha
C 0.81 Rational Method runoff coefficient *Note: Rational Method Coefficient "C" increased by 25% for 100-year calculations*

	5-year					100-year				
t_c (min)	i (mm/hr)	Q_{actual}‡ (L/s)	$Q_{release}$ (L/s)	Q_{stored} (L/s)	V_{stored} (m^3)	i (mm/hr)	Q_{actual}‡ (L/s)	$Q_{release}$ (L/s)	Q_{stored} (L/s)	V_{stored} (m^3)
5	141.2	943.4	253.1	690.3	207.1	242.7	1954.7	261.0	1693.7	508.1
10	104.2	708.2	253.1	455.1	273.1	178.6	1454.0	261.0	1193.0	715.8
15	83.6	577.0	253.1	323.9	291.5	142.9	1175.7	261.0	914.6	823.2
20	70.3	492.4	253.1	239.3	287.1	120.0	996.6	261.0	735.6	882.7
25	60.9	432.9	253.1	179.8	269.7	103.8	870.9	261.0	609.9	914.8
30	53.9	388.6	253.1	135.5	243.8	91.9	777.4	261.0	516.4	929.5
35	48.5	354.2	253.1	101.1	212.2	82.6	704.9	261.0	443.9	932.1
40	44.2	326.6	253.1	73.5	176.4	75.1	646.9	261.0	385.8	926.0
45	40.6	304.0	253.1	50.9	137.4	69.1	599.3	261.0	338.3	913.3
50	37.7	285.1	253.1	32.0	95.9	64.0	559.5	261.0	298.5	895.5
55	35.1	269.0	253.1	15.9	52.4	59.6	525.7	261.0	264.7	873.5
60	32.9	255.1	253.1	2.0	7.3	55.9	496.6	261.0	235.6	848.1
65	31.0	243.0	243.0	0.0	0.0	52.6	471.2	261.0	210.2	819.9
70	29.4	232.4	232.4	0.0	0.0	49.8	448.9	261.0	187.9	789.3
75	27.9	223.0	223.0	0.0	0.0	47.3	429.2	261.0	168.2	756.7
80	26.6	214.5	214.5	0.0	0.0	45.0	411.5	261.0	150.5	722.3
85	25.4	207.0	207.0	0.0	0.0	43.0	395.6	261.0	134.6	686.3
90	24.3	200.1	200.1	0.0	0.0	41.1	381.2	261.0	120.2	649.0
95	23.3	193.8	193.8	0.0	0.0	39.4	368.1	261.0	107.1	610.5
100	22.4	188.1	188.1	0.0	0.0	37.9	356.2	261.0	95.2	570.9
105	21.6	182.9	182.9	0.0	0.0	36.5	345.2	261.0	84.2	530.3

‡ Includes controlled flow from BLDG A-G

5-year $Q_{attenuated}$ **253.1 L/s** **100-year $Q_{attenuated}$** **261.0 L/s**
5-year Max. Storage Required **291.5 m^3** **100-year Max. Storage Required** **932.1 m^3**
Est. 5-year Storage Elevation **103.42 m** **Est. 100-year Storage Elevation** **103.55 m**

Summary of Release Rates and Storage Volumes

Control Area	5-Year Required Storage (m^3)	100-Year Required Storage (m^3)	100-Year Available Storage* (m^3)
U1	0.0	0.0	0.0
U2	0.0	0.0	0.0
U3	0.0	0.0	0.0
A1	291.5	932.1	933.6
Total	**291.5**	**932.1**	**933.6**

*Note Available Storage Not Including Structure and Sewer Storage

PREVIOUSLY APPROVED (D07-12-17-0186)

Stormwater - Proposed Development
City of Ottawa Sewer Design Guidelines, 2012

Target Flow Rate

				5-year		100-year	
			t_c (min)	i (mm/hr)	Q_{actual} (L/s)	i (mm/hr)	Q_{actual} (L/s)
Site Area	4.44	ha					
C	0.74	Rational Method runoff coefficient	21.4	67.4	271.6	115.0	463.6

Estimated Post Development Peak Flow from Unattenuated Areas

Area ID U1
Total Area 0.679 ha
C 0.24 Rational Method runoff coefficient

	5-year					100-year				
t_c (min)	i (mm/hr)	Q_{actual} (L/s)	$Q_{release}$ (L/s)	Q_{stored} (L/s)	V_{stored} (m^3)	i (mm/hr)	Q_{actual} (L/s)	$Q_{release}$ (L/s)	Q_{stored} (L/s)	V_{stored} (m^3)
15.1	83.2	37.3	37.3	0.0	0.0	142.4	79.7	79.7	0.0	0.0

Area ID U2
Total Area 0.079 ha
C 0.59 Rational Method runoff coefficient

	5-year					100-year				
t_c (min)	i (mm/hr)	Q_{actual} (L/s)	$Q_{release}$ (L/s)	Q_{stored} (L/s)	V_{stored} (m^3)	i (mm/hr)	Q_{actual} (L/s)	$Q_{release}$ (L/s)	Q_{stored} (L/s)	V_{stored} (m^3)
15.1	83.2	10.6	10.6	0.0	0.0	142.4	22.7	22.7	0.0	0.0

Area ID U3
Total Area 0.015 ha
C 0.90 Rational Method runoff coefficient

	5-year					100-year				
t_c (min)	i (mm/hr)	Q_{actual} (L/s)	$Q_{release}$ (L/s)	Q_{stored} (L/s)	V_{stored} (m^3)	i (mm/hr)	Q_{actual} (L/s)	$Q_{release}$ (L/s)	Q_{stored} (L/s)	V_{stored} (m^3)
15.1	83.2	3.2	3.2	0.0	0.0	142.4	6.1	6.1	0.0	0.0

Iber Hazeldean Land Limited
5734-5754 Hazeldean Road/24 Iber Road
Proposed Site Conditions with Back Water

PREVIOUSLY APPROVED (D07-12-17-0186)

Estimated Post Development Storage Requirement

Building ID	**BLDG A**	
Roof Area	0.190	ha
Avail Storage Area	0.180	
C	0.90	Rational Method runoff coefficient
t_c	10	min, tc at outlet without restriction

Note: Rational Method Coefficient "C" increased by 25% for 100-year calculations

Estimated Number of Roof Drains

Building Length	86.6	
Building Width	22.3	
Number of Drains	9	
m^2 / Drain	200.1	max 232.25m^2/notch as recommended by Zurn for Ottawa

Roof Top Rating Curve per Zurn Model Z-105-5

d (m)	A (m^2)	V_{acc} (m^3)	V_{avail} (m^3)	Q_{notch} (L/s)	Q_{roof} (L/s)	$V_{drawdown}$ (hr)
0.000	0	0.0	0.0	0.00	0.00	0.00
0.025	112.6	0.9	0.9	0.38	3.42	0.08
0.050	450.3	6.6	7.5	0.77	6.93	0.34
0.075	1013.1	17.8	25.3	1.14	10.26	0.82
0.100	1801.0	34.7	60.0	1.52	13.68	1.53
0.125	1801.0	45.0	105.1	1.90	17.10	2.26
0.150	1801.0	45.0	150.1	2.28	20.52	2.87

* Assumes one notch opening per drain, assumes maximum slope of 10cm

	5-year					100-year				
t_c (min)	i (mm/hr)	Q_{actual} (L/s)	$Q_{release}$ (L/s)	Q_{stored} (L/s)	V_{stored} (m^3)	i (mm/hr)	Q_{actual} (L/s)	$Q_{release}$ (L/s)	Q_{stored} (L/s)	V_{stored} (m^3)
10	104.2	49.4	10.5	38.9	23.3	178.6	94.0	13.8	80.2	48.1
15	83.6	39.6	10.5	29.1	26.2	142.9	75.3	13.8	61.4	55.3
20	70.3	33.3	10.5	22.8	27.4	120.0	63.2	13.8	49.3	59.2
25	60.9	28.9	10.5	18.4	27.6	103.8	54.7	13.8	40.8	61.3
30	53.9	25.6	10.5	15.1	27.1	91.9	48.4	13.8	34.5	62.2
35	48.5	23.0	10.5	12.5	26.3	82.6	43.5	13.8	29.6	62.2
40	44.2	20.9	10.5	10.5	25.1	75.1	39.6	13.8	25.7	61.7
45	40.6	19.3	10.5	8.8	23.7	69.1	36.4	13.8	22.5	60.8
50	37.7	17.8	10.5	7.4	22.1	64.0	33.7	13.8	19.8	59.5
55	35.1	16.6	10.5	6.2	20.3	59.6	31.4	13.8	17.6	57.9
60	32.9	15.6	10.5	5.1	18.5	55.9	29.4	13.8	15.6	56.1
65	31.0	14.7	10.5	4.2	16.5	52.6	27.7	13.8	13.9	54.1
70	29.4	13.9	10.5	3.4	14.4	49.8	26.2	13.8	12.4	52.0
75	27.9	13.2	10.5	2.7	12.3	47.3	24.9	13.8	11.0	49.7
80	26.6	12.6	10.5	2.1	10.1	45.0	23.7	13.8	9.8	47.3
85	25.4	12.0	10.5	1.5	7.9	43.0	22.6	13.8	8.8	44.7
90	24.3	11.5	10.5	1.0	5.6	41.1	21.6	13.8	7.8	42.1
95	23.3	11.0	10.5	0.6	3.2	39.4	20.8	13.8	6.9	39.4
100	22.4	10.6	10.5	0.1	0.8	37.9	20.0	13.8	6.1	36.7
105	21.6	10.2	10.2	0.0	0.0	36.5	19.2	13.8	5.4	33.8
110	20.8	9.9	9.9	0.0	0.0	35.2	18.5	13.8	4.7	31.0

5-year Q_{roof}	**10.48**	**L/s**	**100-year Q_{roof}**	**13.85**	**L/s**
5-year Max. Storage Required	**27.6**	**m^3**	**100-year Max. Storage Required**	**62.2**	**m^3**
5-year Storage Depth	**0.077**	**m**	**100-year Storage Depth**	**0.101**	**m**
5-year Estimated Drawdown Time	**0.87**	**hr**	**100-year Estimated Drawdown Time**	**1.56**	**hr**

Iber Hazeldean Land Limited
5734-5754 Hazeldean Road/24 Iber Road
Proposed Site Conditions with Back Water

PREVIOUSLY APPROVED (D07-12-17-0186)

Building ID	**BLDG B**	
Roof Area	0.140	ha
Avail Storage Area	0.133	
C	0.90	Rational Method runoff coefficient
t_c	10	min, tc at outlet without restriction

Note: Rational Method Coefficient "C" increased by 25% for 100-year calculations

Estimated Number of Roof Drains

Building Length	58.0	
Building Width	24.0	
Number of Drains	6	
m^2 / Drain	222.3	max 232.25m^2/notch as recommended by Zurn for Ottawa

Roof Top Rating Curve per Zurn Model Z-105-5

d (m)	A (m^2)	V_{acc} (m^3)	V_{avail} (m^3)	Q_{notch} (L/s)	Q_{roof} (L/s)	$V_{drawdown}$ (hr)
0.000	0	0.0	0.0	0.00	0.00	0.00
0.025	83.4	0.7	0.7	0.38	2.28	0.08
0.050	333.5	4.9	5.6	0.77	4.62	0.38
0.075	750.3	13.2	18.8	1.14	6.84	0.91
0.100	1333.9	25.7	44.5	1.52	9.12	1.70
0.125	1333.9	33.3	77.8	1.90	11.40	2.51
0.150	1333.9	33.3	111.2	2.28	13.68	3.19

* Assumes one notch opening per drain, assumes maximum slope of 10cm

	5-year					100-year				
t_c (min)	i (mm/hr)	Q_{actual} (L/s)	$Q_{release}$ (L/s)	Q_{stored} (L/s)	V_{stored} (m^3)	i (mm/hr)	Q_{actual} (L/s)	$Q_{release}$ (L/s)	Q_{stored} (L/s)	V_{stored} (m^3)
10	104.2	36.6	7.1	29.5	17.7	178.6	69.6	9.4	60.3	36.2
15	83.6	29.3	7.1	22.3	20.0	142.9	55.7	9.4	46.4	41.7
20	70.3	24.7	7.1	17.6	21.1	120.0	46.8	9.4	37.4	44.9
25	60.9	21.4	7.1	14.3	21.4	103.8	40.5	9.4	31.1	46.7
30	53.9	18.9	7.1	11.9	21.3	91.9	35.8	9.4	26.5	47.6
35	48.5	17.0	7.1	10.0	20.9	82.6	32.2	9.4	22.8	48.0
40	44.2	15.5	7.1	8.4	20.2	75.1	29.3	9.4	19.9	47.9
45	40.6	14.3	7.1	7.2	19.4	69.1	26.9	9.4	17.6	47.4
50	37.7	13.2	7.1	6.1	18.4	64.0	24.9	9.4	15.6	46.8
55	35.1	12.3	7.1	5.3	17.3	59.6	23.3	9.4	13.9	45.9
60	32.9	11.6	7.1	4.5	16.1	55.9	21.8	9.4	12.4	44.8
65	31.0	10.9	7.1	3.8	14.9	52.6	20.5	9.4	11.2	43.6
70	29.4	10.3	7.1	3.2	13.6	49.8	19.4	9.4	10.1	42.2
75	27.9	9.8	7.1	2.7	12.2	47.3	18.4	9.4	9.1	40.8
80	26.6	9.3	7.1	2.2	10.8	45.0	17.5	9.4	8.2	39.3
85	25.4	8.9	7.1	1.8	9.3	43.0	16.8	9.4	7.4	37.7
90	24.3	8.5	7.1	1.4	7.8	41.1	16.0	9.4	6.7	36.0
95	23.3	8.2	7.1	1.1	6.3	39.4	15.4	9.4	6.0	34.3
100	22.4	7.9	7.1	0.8	4.7	37.9	14.8	9.4	5.4	32.5
105	21.6	7.6	7.1	0.5	3.1	36.5	14.2	9.4	4.9	30.7
110	20.8	7.3	7.1	0.2	1.5	35.2	13.7	9.4	4.4	28.8

5-year Q_{roof}	**7.08**	**L/s**	**100-year Q_{roof}**	**9.36**	**L/s**
5-year Max. Storage Required	**21.4**	**m^3**	**100-year Max. Storage Required**	**48.0**	**m^3**
5-year Storage Depth	**0.078**	**m**	**100-year Storage Depth**	**0.103**	**m**
5-year Estimated Drawdown Time	**1.00**	**hr**	**100-year Estimated Drawdown Time**	**1.78**	**hr**

Iber Hazeldean Land Limited
5734-5754 Hazeldean Road/24 Iber Road
Proposed Site Conditions with Back Water

PREVIOUSLY APPROVED (D07-12-17-0186)

Building ID	**BLDG BB**	
Roof Area	0.041	ha
Avail Storage Area	0.039	
C	0.90	Rational Method runoff coefficient
t_c	10	min, tc at outlet without restriction

Note: Rational Method Coefficient "C" increased by 25% for 100-year calculations

Estimated Number of Roof Drains

Building Length	15.5	
Building Width	24.0	
Number of Drains	2	
m^2 / Drain	194.7	max 232.25m^2/notch as recommended by Zurn for Ottawa

Roof Top Rating Curve per Zurn Model Z-105-5

d (m)	A (m^2)	V_{acc} (m^3)	V_{avail} (m^3)	Q_{notch} (L/s)	Q_{roof} (L/s)	$V_{drawdown}$ (hr)
0.000	0	0.0	0.0	0.00	0.00	0.00
0.025	24.3	0.2	0.2	0.38	0.76	0.07
0.050	97.3	1.4	1.6	0.77	1.54	0.33
0.075	219.0	3.9	5.5	1.14	2.28	0.80
0.100	389.3	7.5	13.0	1.52	3.04	1.49
0.125	389.3	9.7	22.7	1.90	3.80	2.20
0.150	389.3	9.7	32.4	2.28	4.56	2.79

* Assumes one notch opening per drain, assumes maximum slope of 10cm

	5-year					100-year				
t_c (min)	i (mm/hr)	Q_{actual} (L/s)	$Q_{release}$ (L/s)	Q_{stored} (L/s)	V_{stored} (m^3)	i (mm/hr)	Q_{actual} (L/s)	$Q_{release}$ (L/s)	Q_{stored} (L/s)	V_{stored} (m^3)
10	104.2	10.7	2.3	8.4	5.0	178.6	20.3	3.1	17.3	10.4
15	83.6	8.6	2.3	6.2	5.6	142.9	16.3	3.1	13.2	11.9
20	70.3	7.2	2.3	4.9	5.9	120.0	13.7	3.1	10.6	12.7
25	60.9	6.2	2.3	3.9	5.9	103.8	11.8	3.1	8.8	13.1
30	53.9	5.5	2.3	3.2	5.8	91.9	10.5	3.1	7.4	13.3
35	48.5	5.0	2.3	2.7	5.6	82.6	9.4	3.1	6.3	13.3
40	44.2	4.5	2.3	2.2	5.3	75.1	8.6	3.1	5.5	13.2
45	40.6	4.2	2.3	1.8	5.0	69.1	7.9	3.1	4.8	12.9
50	37.7	3.9	2.3	1.5	4.6	64.0	7.3	3.1	4.2	12.6
55	35.1	3.6	2.3	1.3	4.2	59.6	6.8	3.1	3.7	12.3
60	32.9	3.4	2.3	1.1	3.8	55.9	6.4	3.1	3.3	11.9
65	31.0	3.2	2.3	0.9	3.4	52.6	6.0	3.1	2.9	11.4
70	29.4	3.0	2.3	0.7	2.9	49.8	5.7	3.1	2.6	10.9
75	27.9	2.9	2.3	0.5	2.4	47.3	5.4	3.1	2.3	10.4
80	26.6	2.7	2.3	0.4	1.9	45.0	5.1	3.1	2.1	9.9
85	25.4	2.6	2.3	0.3	1.4	43.0	4.9	3.1	1.8	9.3
90	24.3	2.5	2.3	0.2	0.9	41.1	4.7	3.1	1.6	8.7
95	23.3	2.4	2.3	0.1	0.4	39.4	4.5	3.1	1.4	8.1
100	22.4	2.3	2.3	0.0	0.0	37.9	4.3	3.1	1.2	7.5
105	21.6	2.2	2.2	0.0	0.0	36.5	4.2	3.1	1.1	6.9
110	20.8	2.1	2.1	0.0	0.0	35.2	4.0	3.1	0.9	6.2

5-year Q_{roof}	**2.32**	**L/s**	**100-year Q_{roof}**	**3.07**	**L/s**
5-year Max. Storage Required	**5.9**	**m^3**	**100-year Max. Storage Required**	**13.3**	**m^3**
5-year Storage Depth	**0.076**	**m**	**100-year Storage Depth**	**0.101**	**m**
5-year Estimated Drawdown Time	**0.84**	**hr**	**100-year Estimated Drawdown Time**	**1.51**	**hr**

Iber Hazeldean Land Limited
5734-5754 Hazeldean Road/24 Iber Road
Proposed Site Conditions with Back Water

PREVIOUSLY APPROVED (D07-12-17-0186)

Building ID	**BLDG C**	
Roof Area	0.288	ha
Avail Storage Area	0.274	
C	0.90	Rational Method runoff coefficient
t_c	10	min, tc at outlet without restriction

Note: Rational Method Coefficient "C" increased by 25% for 100-year calculations

Estimated Number of Roof Drains

Building Length	64.2	
Building Width	43.8	
Number of Drains	12	
m^2 / Drain	228.4	max 232.25m^2/notch as recommended by Zurn for Ottawa

Roof Top Rating Curve per Zurn Model Z-105-5

d (m)	A (m^2)	V_{acc} (m^3)	V_{avail} (m^3)	Q_{notch} (L/s)	Q_{roof} (L/s)	$V_{drawdown}$ (hr)
0.000	0	0.0	0.0	0.00	0.00	0.00
0.025	171.3	1.4	1.4	0.38	4.56	0.09
0.050	685.1	10.0	11.4	0.77	9.24	0.39
0.075	1541.4	27.1	38.5	1.14	13.68	0.94
0.100	2740.3	52.8	91.3	1.52	18.24	1.74
0.125	2740.3	68.5	159.9	1.90	22.80	2.58
0.150	2740.3	68.5	228.4	2.28	27.36	3.27

* Assumes one notch opening per drain, assumes maximum slope of 10cm

	5-year					100-year				
t_c (min)	i (mm/hr)	Q_{actual} (L/s)	$Q_{release}$ (L/s)	Q_{stored} (L/s)	V_{stored} (m^3)	i (mm/hr)	Q_{actual} (L/s)	$Q_{release}$ (L/s)	Q_{stored} (L/s)	V_{stored} (m^3)
10	104.2	75.1	14.2	60.9	36.6	178.6	143.1	18.8	124.3	74.6
15	83.6	60.3	14.2	46.1	41.4	142.9	114.5	18.8	95.7	86.1
20	70.3	50.7	14.2	36.5	43.8	120.0	96.1	18.8	77.3	92.8
25	60.9	43.9	14.2	29.7	44.6	103.8	83.2	18.8	64.4	96.6
30	53.9	38.9	14.2	24.7	44.4	91.9	73.6	18.8	54.8	98.7
35	48.5	35.0	14.2	20.8	43.7	82.6	66.2	18.8	47.4	99.5
40	44.2	31.9	14.2	17.7	42.4	75.1	60.2	18.8	41.4	99.4
45	40.6	29.3	14.2	15.1	40.8	69.1	55.3	18.8	36.5	98.7
50	37.7	27.2	14.2	13.0	38.9	64.0	51.2	18.8	32.5	97.4
55	35.1	25.3	14.2	11.1	36.7	59.6	47.8	18.8	29.0	95.7
60	32.9	23.8	14.2	9.6	34.4	55.9	44.8	18.8	26.0	93.6
65	31.0	22.4	14.2	8.2	31.9	52.6	42.2	18.8	23.4	91.3
70	29.4	21.2	14.2	7.0	29.3	49.8	39.9	18.8	21.1	88.7
75	27.9	20.1	14.2	5.9	26.6	47.3	37.9	18.8	19.1	85.9
80	26.6	19.2	14.2	5.0	23.8	45.0	36.0	18.8	17.3	82.9
85	25.4	18.3	14.2	4.1	20.9	43.0	34.4	18.8	15.6	79.7
90	24.3	17.5	14.2	3.3	17.9	41.1	32.9	18.8	14.2	76.4
95	23.3	16.8	14.2	2.6	14.8	39.4	31.6	18.8	12.8	73.0
100	22.4	16.2	14.2	2.0	11.7	37.9	30.4	18.8	11.6	69.5
105	21.6	15.6	14.2	1.4	8.6	36.5	29.2	18.8	10.5	65.9
110	20.8	15.0	14.2	0.8	5.4	35.2	28.2	18.8	9.4	62.2

5-year Q_{roof}	**14.20**	**L/s**	**100-year Q_{roof}**	**18.78**	**L/s**
5-year Max. Storage Required	**44.6**	**m^3**	**100-year Max. Storage Required**	**99.5**	**m^3**
5-year Storage Depth	**0.078**	**m**	**100-year Storage Depth**	**0.103**	**m**
5-year Estimated Drawdown Time	**1.03**	**hr**	**100-year Estimated Drawdown Time**	**1.84**	**hr**

Iber Hazeldean Land Limited
5734-5754 Hazeldean Road/24 Iber Road
Proposed Site Conditions with Back Water

PREVIOUSLY APPROVED (D07-12-17-0186)

Building ID	**BLDG D**	
Roof Area	0.101	ha
Avail Storage Area	0.096	
C	0.90	Rational Method runoff coefficient
t_c	10	min, tc at outlet without restriction

Note: Rational Method Coefficient "C" increased by 25% for 100-year calculations

Estimated Number of Roof Drains

Building Length	20.2	
Building Width	53.1	
Number of Drains	5	
m^2 / Drain	192.7	max 232.25m^2/notch as recommended by Zurn for Ottawa

Roof Top Rating Curve per Zurn Model Z-105-5

d (m)	A (m^2)	V_{acc} (m^3)	V_{avail} (m^3)	Q_{notch} (L/s)	Q_{roof} (L/s)	$V_{drawdown}$ (hr)
0.000	0	0.0	0.0	0.00	0.00	0.00
0.025	60.2	0.5	0.5	0.38	1.90	0.07
0.050	240.9	3.5	4.0	0.77	3.85	0.33
0.075	542.0	9.5	13.6	1.14	5.70	0.79
0.100	963.6	18.6	32.1	1.52	7.60	1.47
0.125	963.6	24.1	56.2	1.90	9.50	2.17
0.150	963.6	24.1	80.3	2.28	11.40	2.76

* Assumes one notch opening per drain, assumes maximum slope of 10cm

	5-year					100-year				
t_c (min)	i (mm/hr)	Q_{actual} (L/s)	$Q_{release}$ (L/s)	Q_{stored} (L/s)	V_{stored} (m^3)	i (mm/hr)	Q_{actual} (L/s)	$Q_{release}$ (L/s)	Q_{stored} (L/s)	V_{stored} (m^3)
10	104.2	26.4	5.8	20.6	12.4	178.6	50.3	7.7	42.7	25.6
15	83.6	21.2	5.8	15.4	13.9	142.9	40.3	7.7	32.6	29.3
20	70.3	17.8	5.8	12.0	14.4	120.0	33.8	7.7	26.1	31.4
25	60.9	15.4	5.8	9.6	14.5	103.8	29.3	7.7	21.6	32.4
30	53.9	13.7	5.8	7.9	14.2	91.9	25.9	7.7	18.2	32.8
35	48.5	12.3	5.8	6.5	13.7	82.6	23.3	7.7	15.6	32.8
40	44.2	11.2	5.8	5.4	13.0	75.1	21.2	7.7	13.5	32.4
45	40.6	10.3	5.8	4.5	12.2	69.1	19.5	7.7	11.8	31.9
50	37.7	9.5	5.8	3.8	11.3	64.0	18.0	7.7	10.4	31.1
55	35.1	8.9	5.8	3.1	10.3	59.6	16.8	7.7	9.1	30.2
60	32.9	8.4	5.8	2.6	9.2	55.9	15.7	7.7	8.1	29.1
65	31.0	7.9	5.8	2.1	8.1	52.6	14.8	7.7	7.2	28.0
70	29.4	7.4	5.8	1.7	6.9	49.8	14.0	7.7	6.4	26.8
75	27.9	7.1	5.8	1.3	5.8	47.3	13.3	7.7	5.7	25.5
80	26.6	6.7	5.8	0.9	4.5	45.0	12.7	7.7	5.0	24.1
85	25.4	6.4	5.8	0.6	3.3	43.0	12.1	7.7	4.4	22.7
90	24.3	6.2	5.8	0.4	2.0	41.1	11.6	7.7	3.9	21.2
95	23.3	5.9	5.8	0.1	0.7	39.4	11.1	7.7	3.5	19.7
100	22.4	5.7	5.7	0.0	0.0	37.9	10.7	7.7	3.0	18.1
105	21.6	5.5	5.5	0.0	0.0	36.5	10.3	7.7	2.6	16.6
110	20.8	5.3	5.3	0.0	0.0	35.2	9.9	7.7	2.3	14.9

5-year Q_{roof}	**5.79**	**L/s**	**100-year Q_{roof}**	**7.65** **L/s**
5-year Max. Storage Required	**14.5**	**m^3**	**100-year Max. Storage Required**	**32.8** **m^3**
5-year Storage Depth	**0.076**	**m**	**100-year Storage Depth**	**0.101** **m**
5-year Estimated Drawdown Time	**0.83**	**hr**	**100-year Estimated Drawdown Time**	**1.49** **hr**

Iber Hazeldean Land Limited
5734-5754 Hazeldean Road/24 Iber Road
Proposed Site Conditions with Back Water

PREVIOUSLY APPROVED (D07-12-17-0186)

Building ID	**FUT. BLDG G**	
Roof Area	0.097	ha
Avail Storage Area	0.092	
C	0.90	Rational Method runoff coefficient
t_c	10	min, tc at outlet without restriction

Note: Rational Method Coefficient "C" increased by 25% for 100-year calculations

Estimated Number of Roof Drains

Building Length	20.2	
Building Width	53.1	
Number of Drains	5	
m^2 / Drain	184.4	max 232.25m^2/notch as recommended by Zurn for Ottawa

Roof Top Rating Curve per Zurn Model Z-105-5

d (m)	A (m^2)	V_{acc} (m^3)	V_{avail} (m^3)	Q_{notch} (L/s)	Q_{roof} (L/s)	$V_{drawdown}$ (hr)
0.000	0	0.0	0.0	0.00	0.00	0.00
0.025	57.6	0.5	0.5	0.38	1.90	0.07
0.050	230.4	3.4	3.8	0.77	3.85	0.31
0.075	518.5	9.1	13.0	1.14	5.70	0.76
0.100	921.8	17.8	30.7	1.52	7.60	1.41
0.125	921.8	23.0	53.8	1.90	9.50	2.08
0.150	921.8	23.0	76.8	2.28	11.40	2.64

* Assumes one notch opening per drain, assumes maximum slope of 10cm

	5-year					100-year				
t_c (min)	i (mm/hr)	Q_{actual} (L/s)	$Q_{release}$ (L/s)	Q_{stored} (L/s)	V_{stored} (m^3)	i (mm/hr)	Q_{actual} (L/s)	$Q_{release}$ (L/s)	Q_{stored} (L/s)	V_{stored} (m^3)
10	104.2	25.3	5.8	19.5	11.7	178.6	48.1	7.6	40.5	24.3
15	83.6	20.3	5.8	14.5	13.1	142.9	38.5	7.6	30.9	27.8
20	70.3	17.0	5.8	11.3	13.5	120.0	32.3	7.6	24.7	29.7
25	60.9	14.8	5.8	9.0	13.5	103.8	28.0	7.6	20.4	30.6
30	53.9	13.1	5.8	7.3	13.2	91.9	24.8	7.6	17.1	30.9
35	48.5	11.8	5.8	6.0	12.6	82.6	22.3	7.6	14.6	30.8
40	44.2	10.7	5.8	5.0	11.9	75.1	20.3	7.6	12.6	30.3
45	40.6	9.9	5.8	4.1	11.1	69.1	18.6	7.6	11.0	29.7
50	37.7	9.1	5.8	3.4	10.1	64.0	17.2	7.6	9.6	28.9
55	35.1	8.5	5.8	2.8	9.1	59.6	16.1	7.6	8.5	27.9
60	32.9	8.0	5.8	2.2	8.0	55.9	15.1	7.6	7.5	26.8
65	31.0	7.5	5.8	1.8	6.9	52.6	14.2	7.6	6.6	25.7
70	29.4	7.1	5.8	1.4	5.7	49.8	13.4	7.6	5.8	24.4
75	27.9	6.8	5.8	1.0	4.5	47.3	12.7	7.6	5.1	23.1
80	26.6	6.4	5.8	0.7	3.3	45.0	12.1	7.6	4.5	21.7
85	25.4	6.2	5.8	0.4	2.0	43.0	11.6	7.6	4.0	20.2
90	24.3	5.9	5.8	0.1	0.7	41.1	11.1	7.6	3.5	18.7
95	23.3	5.7	5.7	0.0	0.0	39.4	10.6	7.6	3.0	17.2
100	22.4	5.4	5.4	0.0	0.0	37.9	10.2	7.6	2.6	15.6
105	21.6	5.2	5.2	0.0	0.0	36.5	9.8	7.6	2.2	14.0
110	20.8	5.1	5.1	0.0	0.0	35.2	9.5	7.6	1.9	12.4

5-year Q_{roof}	**5.76 L/s**		**100-year Q_{roof}**	**7.61 L/s**
5-year Max. Storage Required	**13.5 m^3**		**100-year Max. Storage Required**	**30.9 m^3**
5-year Storage Depth	**0.076 m**		**100-year Storage Depth**	**0.100 m**
5-year Estimated Drawdown Time	**0.78 hr**		**100-year Estimated Drawdown Time**	**1.41 hr**

5734-5754 Hazeldean Road/24 Iber Road
Proposed Site Conditions with Back Water

PREVIOUSLY APPROVED (D07-12-17-0186)

Estimated Post Development Peak Flow from Attenuated Areas

Area ID A

Total Subsurface Storage (m^3) 293.0

Stage Attenuated Areas Storage Summary

		Surface Storage			Surface and Subsurface Storage							
	Stage	Ponding	h_o	delta d	V*	V_{acc}**	5-yr $Q_{release}$†	100-yr $Q_{release}$†	5-yr Elev.	100-yr Elev.	$h_{o\ eff}$ 5yr	$h_{o\ eff}$ 100yr
	(m)	(m^2)	(m)	(m)	(m^3)	(m^3)	(L/s)	(L/s)	(m)	(m)	(m)	(m)
Orifice INV	101.44	-	0.00			0.0	0.0	0.0	101.91	102.52	0.00	0.00
Cistern INV	101.99	-	0.55	0.55	146.5	146.5	0.0	0.0	101.91	102.52	0.00	0.00
Cistern OBV	102.63	-	1.19	0.64	146.5	293.0	152.0	0.0	101.91	102.52	0.72	0.00
T/L1	103.25	0.4	1.81	0.63	0.1	293.1	208.0	153.5	101.91	102.52	1.34	0.73
T/L2	103.30	150.3	1.86	0.05	2.6	295.7	211.9	158.7	101.91	102.52	1.39	0.78
T/L3	103.35	795.8	1.91	0.05	21.5	317.3	215.6	163.7	101.91	102.52	1.44	0.83
0.15m Ponding	103.40	2067.2	1.96	0.05	69.1	386.4	219.4	168.6	101.91	102.52	1.49	0.88
Max Ponding	103.55	8923.7	2.11	0.15	764.3	1150.7	230.1	182.4	101.91	102.52	1.64	1.03

* V=Incremental storage volume

Note: 5 and 100 year water elevations provided by JFSA

**V_{acc}=Total surface and sub-surface

† $Q_{release}$ = Release rate calculated from orifice equation accounting for backwater using the 5-year and 100-year waterlevels respectively

$$Q = C_d \times A \times \sqrt{2 \times g \times h_o}$$

Where Q = *Release rate (cms)*
C_d = *Discharge Coefficient (0.61)*
A = *Area of the orifice(m^2)*
g = *gravitational constant (9.81m/s^2)*
$h_{o\ eff}$ = *Effective head above the orifice due to waterlevel at outlet*

Orifice Location **STM101** **Dia** 291
Total Area 2.810 ha
C 0.81 Rational Method runoff coefficient *Note: Rational Method Coefficient "C" increased by 25% for 100-year calculations*

	5-year					100-year				
t_c (min)	i (mm/hr)	Q_{actual}‡ (L/s)	$Q_{release}$ (L/s)	Q_{stored} (L/s)	V_{stored} (m^3)	i (mm/hr)	Q_{actual}‡ (L/s)	$Q_{release}$ (L/s)	Q_{stored} (L/s)	V_{stored} (m^3)
5	141.2	943.4	216.4	727.0	218.1	242.7	1954.7	182.1	1772.6	531.8
10	104.2	708.2	216.4	491.8	295.1	178.6	1454.0	182.1	1272.0	763.2
15	83.6	577.0	216.4	360.6	324.5	142.9	1175.7	182.1	993.6	894.2
20	70.3	492.4	216.4	276.0	331.2	120.0	996.6	182.1	814.5	977.4
25	60.9	432.9	216.4	216.5	324.7	103.8	870.9	182.1	688.8	1033.2
30	53.9	388.6	216.4	172.2	309.9	91.9	777.4	182.1	595.3	1071.5
35	48.5	354.2	216.4	137.8	289.3	82.6	704.9	182.1	522.8	1097.9
40	44.2	326.6	216.4	110.2	264.5	75.1	646.9	182.1	464.8	1115.5
45	40.6	304.0	216.4	87.6	236.5	69.1	599.3	182.1	417.2	1126.5
50	37.7	285.1	216.4	68.7	206.0	64.0	559.5	182.1	377.4	1132.3
55	35.1	269.0	216.4	52.6	173.6	59.6	525.7	182.1	343.6	1134.0
60	32.9	255.1	216.4	38.7	139.4	55.9	496.6	182.1	314.5	1132.3
65	31.0	243.0	216.4	26.7	103.9	52.6	471.2	182.1	289.2	1127.8
70	29.4	232.4	216.4	16.0	67.3	49.8	448.9	182.1	266.9	1120.8
75	27.9	223.0	216.4	6.6	29.6	47.3	429.2	182.1	247.1	1111.9
80	26.6	214.5	214.5	0.0	0.0	45.0	411.5	182.1	229.4	1101.2
85	25.4	207.0	207.0	0.0	0.0	43.0	395.6	182.1	213.5	1088.9
90	24.3	200.1	200.1	0.0	0.0	41.1	381.2	182.1	199.1	1075.3
95	23.3	193.8	193.8	0.0	0.0	39.4	368.1	182.1	186.0	1060.5
100	22.4	188.1	188.1	0.0	0.0	37.9	356.2	182.1	174.1	1044.5
105	21.6	182.9	182.9	0.0	0.0	36.5	345.2	182.1	163.1	1027.6

‡ Includes controlled flow from BLDG A-G

5-year $Q_{attenuated}$ **216.39 L/s**
5-year Max. Storage Required **331.2 m^3**
Est. 5-year Storage Elevation **103.36 m**

100-year $Q_{attenuated}$ **182.08 L/s**
100-year Max. Storage Required **1134.0 m^3**
Est. 100-year Storage Elevation **103.55 m**

Summary of Release Rates and Storage Volumes

Control Area	5-Year Release Rate (L/s)	5-Year Required Storage (m^3)	100-Year Release Rate (L/s)	100-Year Required Storage (m^3)	100-Year Available Storage (m^3)
U1	37.3	0.0	79.7	0.0	0.0
U2	10.6	0.0	22.7	0.0	0.0
U3	3.2	0.0	6.1	0.0	0.0
A1	216.4	331.2	182.1	1134.0	1150.7
Total	**267.5**	**331.2**	**290.6**	**1134.0**	**1150.7**

** Note Attenuated Areas includes constant controlled flow from BLDG A-G*

5734-5754 Hazeldean Road/24 Iber Road
Proposed Site Conditions - 2 Year Storm Event

PREVIOUSLY APPROVED (D07-12-17-0186)

Stormwater - Proposed Development
City of Ottawa Sewer Design Guidelines, 2012

Target Flow Rate

Site Area 4.44 ha
C 0.74 Rational Method runoff coefficient

Estimated Post Development Peak Flow from Unattenuated Areas

Area ID U1
Total Area 0.679 ha
C 0.24 Rational Method runoff coefficient

	2-year				
t_c (min)	i (mm/hr)	Q_{actual} (L/s)	$Q_{release}$ (L/s)	Q_{stored} (L/s)	V_{stored} (m^3)
15.1	61.5	27.6	27.6	0.0	0.0

Area ID U2
Total Area 0.079 ha
C 0.59 Rational Method runoff coefficient

	2-year				
t_c (min)	i (mm/hr)	Q_{actual} (L/s)	$Q_{release}$ (L/s)	Q_{stored} (L/s)	V_{stored} (m^3)
15.1	61.5	7.9	7.9	0.0	0.0

Area ID U3
Total Area 0.015 ha
C 0.90 Rational Method runoff coefficient

	2-year				
t_c (min)	i (mm/hr)	Q_{actual} (L/s)	$Q_{release}$ (L/s)	Q_{stored} (L/s)	V_{stored} (m^3)
15.1	61.5	2.4	2.4	0.0	0.0

5734-5754 Hazeldean Road/24 Iber Road
Proposed Site Conditions - 2 Year Storm Event

PREVIOUSLY APPROVED (D07-12-17-0186)

Estimated Post Development Storage Requirement

Building ID	**BLDG A**	
Roof Area	0.190	ha
Avail Storage Area	0.180	
C	0.90	Rational Method runoff coefficient
t_c	10	min, tc at outlet without restriction

Estimated Number of Roof Drains

Building Length	86.6	
Building Width	22.3	
Number of Drains	9	
m^2 / Drain	200.1	max 232.25m^2/notch as recommended by Zurn for Ottawa

Roof Top Rating Curve per Zurn Model Z-105-5

d (m)	A (m^2)	V_{acc} (m^3)	V_{avail} (m^3)	Q_{notch} (L/s)	Q_{roof} (L/s)	$V_{drawdown}$ (hr)
0.000	0	0.0	0.0	0.00	0.00	0.00
0.025	112.6	0.9	0.9	0.38	3.42	0.08
0.050	450.3	6.6	7.5	0.77	6.93	0.34
0.075	1013.1	17.8	25.3	1.14	10.26	0.82
0.100	1801.0	34.7	60.0	1.52	13.68	1.53
0.125	1801.0	45.0	105.1	1.90	17.10	2.26
0.150	1801.0	45.0	150.1	2.28	20.52	2.87

* Assumes one notch opening per drain, assumes maximum slope of 10cm

	2-year				
t_c (min)	i (mm/hr)	Q_{actual} (L/s)	$Q_{release}$ (L/s)	Q_{stored} (L/s)	V_{stored} (m^3)
5	103.6	49.1	9.0	40.1	12.0
10	76.8	36.4	9.0	27.4	16.4
15	61.8	29.3	9.0	20.2	18.2
20	52.0	24.7	9.0	15.6	18.8
25	45.2	21.4	9.0	12.4	18.6
30	40.0	19.0	9.0	9.9	17.9
35	36.1	17.1	9.0	8.1	16.9
40	32.9	15.6	9.0	6.5	15.7
45	30.2	14.3	9.0	5.3	14.3
50	28.0	13.3	9.0	4.3	12.8
55	26.2	12.4	9.0	3.4	11.1
60	24.6	11.6	9.0	2.6	9.4
65	23.2	11.0	9.0	1.9	7.6
70	21.9	10.4	9.0	1.4	5.7
75	20.8	9.9	9.0	0.8	3.7
80	19.8	9.4	9.0	0.4	1.8
85	18.9	9.0	9.0	0.0	0.0
90	18.1	8.6	8.6	0.0	0.0
95	17.4	8.3	8.3	0.0	0.0
100	16.7	7.9	7.9	0.0	0.0
105	16.1	7.6	7.6	0.0	0.0

2-year Q_{roof}	**9.03**	**L/s**
2-year Max. Storage Required	**18.8**	**m^3**
2-year Storage Depth	**0.066**	**m**
2-year Estimated Drawdown Time	**0.64**	**hr**

Iber Hazeldean Land Limited
5734-5754 Hazeldean Road/24 Iber Road
Proposed Site Conditions - 2 Year Storm Event

PREVIOUSLY APPROVED (D07-12-17-0186)

Building ID	**BLDG B**	
Roof Area	0.140	ha
Avail Storage Area	0.133	
C	0.90	Rational Method runoff coefficient
t_c	10	min, tc at outlet without restriction

Estimated Number of Roof Drains

Building Length	58.0	
Building Width	24.0	
Number of Drains	6	
m^2 / Drain	222.3	max 232.25m^2/notch as recommended by Zurn for Ottawa

Roof Top Rating Curve per Zurn Model Z-105-5

d (m)	A (m^2)	V_{acc} (m^3)	V_{avail} (m^3)	Q_{notch} (L/s)	Q_{roof} (L/s)	$V_{drawdown}$ (hr)
0.000	0	0.0	0.0	0.00	0.00	0.00
0.025	83.4	0.7	0.7	0.38	2.28	0.08
0.050	333.5	4.9	5.6	0.77	4.62	0.38
0.075	750.3	13.2	18.8	1.14	6.84	0.91
0.100	1333.9	25.7	44.5	1.52	9.12	1.70
0.125	1333.9	33.3	77.8	1.90	11.40	2.51
0.150	1333.9	33.3	111.2	2.28	13.68	3.19

* Assumes one notch opening per drain, assumes maximum slope of 10cm

	2-year				
t_c (min)	i (mm/hr)	Q_{actual} (L/s)	$Q_{release}$ (L/s)	Q_{stored} (L/s)	V_{stored} (m^3)
5	103.6	36.4	6.1	30.2	9.1
10	76.8	27.0	6.1	20.8	12.5
15	61.8	21.7	6.1	15.5	14.0
20	52.0	18.3	6.1	12.1	14.6
25	45.2	15.9	6.1	9.7	14.6
30	40.0	14.1	6.1	7.9	14.3
35	36.1	12.7	6.1	6.5	13.7
40	32.9	11.5	6.1	5.4	13.0
45	30.2	10.6	6.1	4.5	12.1
50	28.0	9.8	6.1	3.7	11.1
55	26.2	9.2	6.1	3.0	10.1
60	24.6	8.6	6.1	2.5	8.9
65	23.2	8.1	6.1	2.0	7.8
70	21.9	7.7	6.1	1.6	6.5
75	20.8	7.3	6.1	1.2	5.3
80	19.8	7.0	6.1	0.8	4.0
85	18.9	6.7	6.1	0.5	2.6
90	18.1	6.4	6.1	0.2	1.3
95	17.4	6.1	6.1	0.0	0.0
100	16.7	5.9	5.9	0.0	0.0
105	16.1	5.7	5.7	0.0	0.0

2-year Q_{roof}	**6.14**	**L/s**
2-year Max. Storage Required	**14.6**	**m^3**
2-year Storage Depth	**0.067**	**m**
2-year Estimated Drawdown Time	**0.74**	**hr**

Iber Hazeldean Land Limited
5734-5754 Hazeldean Road/24 Iber Road
Proposed Site Conditions - 2 Year Storm Event

PREVIOUSLY APPROVED (D07-12-17-0186)

Building ID	**BLDG BB**	
Roof Area	0.041	ha
Avail Storage Area	0.039	
C	0.90	Rational Method runoff coefficient
t_c	10	min, tc at outlet without restriction

Estimated Number of Roof Drains

Building Length	15.5	
Building Width	24.0	
Number of Drains	2	
m^2 / Drain	194.7	max 232.25m^2/notch as recommended by Zurn for Ottawa

Roof Top Rating Curve per Zurn Model Z-105-5

d (m)	A (m^2)	V_{acc} (m^3)	V_{avail} (m^3)	Q_{notch} (L/s)	Q_{roof} (L/s)	$V_{drawdown}$ (hr)
0.000	0	0.0	0.0	0.00	0.00	0.00
0.025	24.3	0.2	0.2	0.38	0.76	0.07
0.050	97.3	1.4	1.6	0.77	1.54	0.33
0.075	219.0	3.9	5.5	1.14	2.28	0.80
0.100	389.3	7.5	13.0	1.52	3.04	1.49
0.125	389.3	9.7	22.7	1.90	3.80	2.20
0.150	389.3	9.7	32.4	2.28	4.56	2.79

* Assumes one notch opening per drain, assumes maximum slope of 10cm

	2-year				
t_c (min)	i (mm/hr)	Q_{actual} (L/s)	$Q_{release}$ (L/s)	Q_{stored} (L/s)	V_{stored} (m^3)
5	103.6	10.6	2.0	8.6	2.6
10	76.8	7.9	2.0	5.9	3.5
15	61.8	6.3	2.0	4.3	3.9
20	52.0	5.3	2.0	3.3	4.0
25	45.2	4.6	2.0	2.6	3.9
30	40.0	4.1	2.0	2.1	3.8
35	36.1	3.7	2.0	1.7	3.6
40	32.9	3.4	2.0	1.4	3.3
45	30.2	3.1	2.0	1.1	3.0
50	28.0	2.9	2.0	0.9	2.6
55	26.2	2.7	2.0	0.7	2.3
60	24.6	2.5	2.0	0.5	1.9
65	23.2	2.4	2.0	0.4	1.5
70	21.9	2.2	2.0	0.2	1.0
75	20.8	2.1	2.0	0.1	0.6
80	19.8	2.0	2.0	0.0	0.2
85	18.9	1.9	1.9	0.0	0.0
90	18.1	1.9	1.9	0.0	0.0
95	17.4	1.8	1.8	0.0	0.0
100	16.7	1.7	1.7	0.0	0.0
105	16.1	1.7	1.7	0.0	0.0

2-year Q_{roof}	**2.00**	**L/s**
2-year Max. Storage Required	**4.0**	**m^3**
2-year Storage Depth	**0.065**	**m**
2-year Estimated Drawdown Time	**0.62**	**hr**

5734-5754 Hazeldean Road/24 Iber Road
Proposed Site Conditions - 2 Year Storm Event

PREVIOUSLY APPROVED (D07-12-17-0186)

Building ID	**BLDG C**	
Roof Area	0.288	ha
Avail Storage Area	0.274	
C	0.90	Rational Method runoff coefficient
t_c	10	min, tc at outlet without restriction

Estimated Number of Roof Drains

Building Length	64.2	
Building Width	43.8	
Number of Drains	12	
m^2 / Drain	228.4	max 232.25m^2/notch as recommended by Zurn for Ottawa

Roof Top Rating Curve per Zurn Model Z-105-5

d (m)	A (m^2)	V_{acc} (m^3)	V_{avail} (m^3)	Q_{notch} (L/s)	Q_{roof} (L/s)	$V_{drawdown}$ (hr)
0.000	0	0.0	0.0	0.00	0.00	0.00
0.025	171.3	1.4	1.4	0.38	4.56	0.09
0.050	685.1	10.0	11.4	0.77	9.24	0.39
0.075	1541.4	27.1	38.5	1.14	13.68	0.94
0.100	2740.3	52.8	91.3	1.52	18.24	1.74
0.125	2740.3	68.5	159.9	1.90	22.80	2.58
0.150	2740.3	68.5	228.4	2.28	27.36	3.27

* Assumes one notch opening per drain, assumes maximum slope of 10cm

	2-year				
t_c (min)	i (mm/hr)	Q_{actual} (L/s)	$Q_{release}$ (L/s)	Q_{stored} (L/s)	V_{stored} (m^3)
5	103.6	74.7	12.3	62.3	18.7
10	76.8	55.4	12.3	43.0	25.8
15	61.8	44.5	12.3	32.2	29.0
20	52.0	37.5	12.3	25.2	30.2
25	45.2	32.6	12.3	20.2	30.3
30	40.0	28.9	12.3	16.5	29.8
35	36.1	26.0	12.3	13.7	28.7
40	32.9	23.7	12.3	11.4	27.3
45	30.2	21.8	12.3	9.5	25.6
50	28.0	20.2	12.3	7.9	23.6
55	26.2	18.9	12.3	6.5	21.6
60	24.6	17.7	12.3	5.4	19.3
65	23.2	16.7	12.3	4.4	17.0
70	21.9	15.8	12.3	3.5	14.5
75	20.8	15.0	12.3	2.7	12.0
80	19.8	14.3	12.3	2.0	9.4
85	18.9	13.7	12.3	1.3	6.7
90	18.1	13.1	12.3	0.7	4.0
95	17.4	12.6	12.3	0.2	1.2
100	16.7	12.1	12.1	0.0	0.0
105	16.1	11.6	11.6	0.0	0.0

2-year Q_{roof}	**12.34**	**L/s**
2-year Max. Storage Required	**30.3**	**m^3**
2-year Storage Depth	**0.067**	**m**
2-year Estimated Drawdown Time	**0.77**	**hr**

Iber Hazeldean Land Limited
5734-5754 Hazeldean Road/24 Iber Road
Proposed Site Conditions - 2 Year Storm Event

PREVIOUSLY APPROVED (D07-12-17-0186)

Building ID	**BLDG D**	
Roof Area	0.101	ha
Avail Storage Area	0.096	
C	0.90	Rational Method runoff coefficient
t_c	10	min, tc at outlet without restriction

Estimated Number of Roof Drains

Building Length	20.2	
Building Width	53.1	
Number of Drains	5	
m^2 / Drain	192.7	max 232.25m^2/notch as recommended by Zurn for Ottawa

Roof Top Rating Curve per Zurn Model Z-105-5

d (m)	A (m^2)	V_{acc} (m^3)	V_{avail} (m^3)	Q_{notch} (L/s)	Q_{roof} (L/s)	$V_{drawdown}$ (hr)
0.000	0	0.0	0.0	0.00	0.00	0.00
0.025	60.2	0.5	0.5	0.38	1.90	0.07
0.050	240.9	3.5	4.0	0.77	3.85	0.33
0.075	542.0	9.5	13.6	1.14	5.70	0.79
0.100	963.6	18.6	32.1	1.52	7.60	1.47
0.125	963.6	24.1	56.2	1.90	9.50	2.17
0.150	963.6	24.1	80.3	2.28	11.40	2.76

* Assumes one notch opening per drain, assumes maximum slope of 10cm

	2-year				
t_c (min)	i (mm/hr)	Q_{actual} (L/s)	$Q_{release}$ (L/s)	Q_{stored} (L/s)	V_{stored} (m^3)
5	103.6	26.3	5.0	21.3	6.4
10	76.8	19.5	5.0	14.5	8.7
15	61.8	15.7	5.0	10.7	9.6
20	52.0	13.2	5.0	8.2	9.9
25	45.2	11.5	5.0	6.5	9.7
30	40.0	10.2	5.0	5.2	9.3
35	36.1	9.1	5.0	4.2	8.7
40	32.9	8.3	5.0	3.4	8.0
45	30.2	7.7	5.0	2.7	7.3
50	28.0	7.1	5.0	2.1	6.4
55	26.2	6.6	5.0	1.7	5.5
60	24.6	6.2	5.0	1.2	4.5
65	23.2	5.9	5.0	0.9	3.5
70	21.9	5.6	5.0	0.6	2.4
75	20.8	5.3	5.0	0.3	1.3
80	19.8	5.0	5.0	0.0	0.2
85	18.9	4.8	4.8	0.0	0.0
90	18.1	4.6	4.6	0.0	0.0
95	17.4	4.4	4.4	0.0	0.0
100	16.7	4.2	4.2	0.0	0.0
105	16.1	4.1	4.1	0.0	0.0

2-year Q_{roof}	**4.98**	**L/s**
2-year Max. Storage Required	**9.9**	**m^3**
2-year Storage Depth	**0.065**	**m**
2-year Estimated Drawdown Time	**0.61**	**hr**

5734-5754 Hazeldean Road/24 Iber Road
Proposed Site Conditions - 2 Year Storm Event

PREVIOUSLY APPROVED (D07-12-17-0186)

Building ID	UT. BLDG G	
Roof Area	0.097	ha
Avail Storage Area	0.092	
C	0.90	Rational Method runoff coefficient
t_c	10	min, tc at outlet without restriction

Estimated Number of Roof Drains

Building Length	20.2	
Building Width	53.1	
Number of Drains	5	
m^2 / Drain	184.4	max 232.25m^2/notch as recommended by Zurn for Ottawa

Roof Top Rating Curve per Zurn Model Z-105-5

d (m)	A (m^2)	V_{acc} (m^3)	V_{avail} (m^3)	Q_{notch} (L/s)	Q_{roof} (L/s)	$V_{drawdown}$ (hr)
0.000	0	0.0	0.0	0.00	0.00	0.00
0.025	57.6	0.5	0.5	0.38	1.90	0.07
0.050	230.4	3.4	3.8	0.77	3.85	0.31
0.075	518.5	9.1	13.0	1.14	5.70	0.76
0.100	921.8	17.8	30.7	1.52	7.60	1.41
0.125	921.8	23.0	53.8	1.90	9.50	2.08
0.150	921.8	23.0	76.8	2.28	11.40	2.64

* Assumes one notch opening per drain, assumes maximum slope of 10cm

	2-year				
t_c (min)	i (mm/hr)	Q_{actual} (L/s)	$Q_{release}$ (L/s)	Q_{stored} (L/s)	V_{stored} (m^3)
5	103.6	25.1	4.9	20.2	6.1
10	76.8	18.6	4.9	13.7	8.2
15	61.8	15.0	4.9	10.0	9.0
20	52.0	12.6	4.9	7.7	9.2
25	45.2	11.0	4.9	6.0	9.0
30	40.0	9.7	4.9	4.8	8.6
35	36.1	8.7	4.9	3.8	8.0
40	32.9	8.0	4.9	3.0	7.3
45	30.2	7.3	4.9	2.4	6.5
50	28.0	6.8	4.9	1.9	5.6
55	26.2	6.3	4.9	1.4	4.6
60	24.6	6.0	4.9	1.0	3.7
65	23.2	5.6	4.9	0.7	2.6
70	21.9	5.3	4.9	0.4	1.6
75	20.8	5.0	4.9	0.1	0.5
80	19.8	4.8	4.8	0.0	0.0
85	18.9	4.6	4.6	0.0	0.0
90	18.1	4.4	4.4	0.0	0.0
95	17.4	4.2	4.2	0.0	0.0
100	16.7	4.1	4.1	0.0	0.0
105	16.1	3.9	3.9	0.0	0.0

2-year Q_{roof}	**4.94**	**L/s**
2-year Max. Storage Required	**9.2**	**m^3**
2-year Storage Depth	**0.065**	**m**
2-year Estimated Drawdown Time	**0.57**	**hr**

5734-5754 Hazeldean Road/24 Iber Road
Proposed Site Conditions - 2 Year Storm Event

PREVIOUSLY APPROVED (D07-12-17-0186)

Estimated Post Development Peak Flow from Attenuated Areas

Area ID **A**

Maintenance Structures

ID	STM100	STM101A	STM101B	STM102	STM103	STM104	STM105	STM106	STM107
Structure dia (mm)	1500	1500	1500	1200	1200	1800	1200	1200	1200
T/L*	102.85	103.55	103.55	103.55	103.55	103.55	103.55	103.55	103.55
INV	101.16	101.44	101.51	101.78	101.71	101.61	101.70	101.76	101.81
Depth	1.69	2.11	2.04	1.77	1.84	1.94	1.85	1.79	1.94
$V_{structure}$ (m^3)	3.0	3.7	3.6	2.0	2.1	4.9	2.1	2.0	2.2

ID	CBMH108	CBMH109	CBMH110	STM111	STM112	STM113	STM113A	CBMH114	CBMH37
Structure dia (mm)	1200	1200	1200	1200	1200	1200	1200	1200	1200
T/L*	103.30	103.30	103.30	103.54	103.50	103.55	103.55	103.55	103.55
INV	101.88	101.82	101.78	101.86	101.98	101.89	101.79	102.22	102.33
Depth	1.42	1.48	1.52	1.68	1.52	1.66	1.76	1.33	1.22
$V_{structure}$ (m^3)	1.6	1.7	1.7	1.9	1.7	1.9	2.0	1.5	1.4

ID	CICB1	CICB2	CB3	CB4	CB5	CICB6	CICB7	CICB9	CICB10
Structure dia (mm)	600	600	600	600	600	600	600	600	600
T/L*	103.53	103.53	103.45	103.25	103.47	103.44	103.44	103.55	103.55
INV	102.03	102.03	101.95	102.01	101.97	101.94	101.94	102.21	102.21
Depth	1.50	1.50	1.50	1.24	1.50	1.50	1.50	1.34	1.34
$V_{structure}$ (m^3)	0.4	0.5	0.5	0.5	0.5	0.5	0.5	0.5	0.5

ID	CICB11	CICB12	CB13	CB14	CB15	CB16	CB17	CB18	CB19
Structure dia (mm)	600	600	600	600	600	600	600	600	600
T/L*	103.50	103.50	103.40	103.40	103.25	103.40	103.25	103.40	103.25
INV	102.05	102.05	102.08	102.12	102.19	102.16	102.23	102.21	102.28
Depth	1.45	1.45	1.32	1.28	1.06	1.24	1.02	1.19	0.97
$V_{structure}$ (m^3)	0.5	0.5	0.5	0.5	0.5	0.5	0.5	0.5	0.4

ID	CB20	CB21	CB22	CB23	CB24	CB25	CB26	CB27	CB28
Structure dia (mm)	600	600	600	600	600	600	600	600	600
T/L*	103.25	103.40	103.40	103.05	103.55	103.30	103.30	103.30	103.30
INV	102.00	102.17	102.20	102.24	102.19	102.06	102.03	102.06	101.91
Depth	1.25	1.23	1.20	0.81	1.36	1.24	1.27	1.24	1.39
$V_{structure}$ (m^3)	0.5	0.5	0.5	0.4	0.5	0.5	0.5	0.5	0.5

ID	CB29	CB30	CICB31	CICB32	CICB33	CICB34	CICB35	CICB36
Structure dia (mm)	600	600	600	600	600	600	600	600
T/L*	103.30	103.30	103.40	103.40	103.55	103.55	103.55	103.55
INV	101.98	102.16	101.90	101.90	102.45	102.45	102.65	102.65
Depth	1.32	1.14	1.50	1.50	1.10	1.10	0.90	0.90
$V_{structure}$ (m^3)	0.5	0.5	0.5	0.5	0.4	0.4	0.3	0.3

Sewers

ID	200mm	250mm	300mm	375mm	450mm	525mm	600mm	675mm	825mm
Storage Pipe Dia (mm)	200	250	300	375	450	525	600	675	825
L (m)	163.8	219.9	117.9	109	141.5	46.2	88.8	27.9	0
V_{sewer} (m^3)	5.1	10.8	8.3	12.0	22.5	10.0	25.1	10.0	0.0

*Top of lid or max ponding elevation (103.55)

ID	900mm	UG Storage
Storage Pipe Dia (mm)	900	0
L (m)	86.4	0
V_{sewer} (m^3)	55.0	76.0

*Top of lid or max ponding elevation (103.55)

Total U/G Storage (m^3)	76.0
Total Structure Storage (m^3)	217.0
Total Subsurface Storage (m^3)	293.0

5734-5754 Hazeldean Road/24 Iber Road
Proposed Site Conditions - 2 Year Storm Event

PREVIOUSLY APPROVED (D07-12-17-0186)

Stage Attenuated Areas Storage Summary

		Surface Storage			Surface and Subsurface Storage							
	Stage	Ponding	h_o	delta d	V*	V_{acc}**	2-yr $Q_{release}$†	100-yr $Q_{release}$†	2-yr Elev.	100-yr Elev.	$h_{o\ eff\ 2}$yr	$h_{o\ eff}$ 100yr
	(m)	(m^2)	(m)	(m)	(m^3)	(m^3)	(L/s)	(L/s)	(m)	(m)	(m)	(m)
Orifice INV	101.44	-	0.00			0.0	0.0	0.0	101.91	102.52	0.00	0.00
Cistern INV	101.99	-	0.55	0.55	146.5	146.5	0.0	0.0	101.91	102.52	0.00	0.00
Cistern OBV	102.63	-	1.19	0.64	146.5	293.0	152.0	0.0	101.91	102.52	0.72	0.00
T/L1	103.25	0.4	1.81	0.63	0.1	293.1	208.0	153.5	101.91	102.52	1.34	0.73
T/L2	103.30	150.3	1.86	0.05	2.6	295.7	211.9	158.7	101.91	102.52	1.39	0.78
T/L3	103.35	795.8	1.91	0.05	21.5	317.3	215.6	163.7	101.91	102.52	1.44	0.83
0.15m Ponding	103.40	2067.2	1.96	0.05	69.1	386.4	219.4	168.6	101.91	102.52	1.49	0.88
Max Ponding	103.55	8923.7	2.11	0.15	764.3	1150.7	230.1	182.4	101.91	102.52	1.64	1.03

* V=Incremental storage volume
**V_{acc}=Total surface and sub-surface
† $Q_{release}$ = Release rate calculated from orifice equation accounting for backwater using the 5-year and 100-year waterlevels respectively

$$Q = C_d \times A \times \sqrt{2 \times g \times h_o}$$

Where Q = *Release rate (cms)*
C_d =*Discharge Coefficient (0.61)*
A= *Area of the orifice(m^2)*
g =*gravitational constant (9.81m/s^2)*
$h_{o\ eff}$ =*Effective head above the orifice due to waterlevel at outlet*

Orifice Location **STM101** **Dia** 291
Total Area 2.810 ha
C 0.81 Rational Method runoff coefficient

	2-year				
t_c (min)	i (mm/hr)	Q_{actual}‡ (L/s)	$Q_{release}$ (L/s)	Q_{stored} (L/s)	V_{stored}‡‡ (m^3)
5	103.6	698.0	139.4	558.7	167.6
10	76.8	527.8	139.4	388.4	233.1
15	61.8	432.2	139.4	292.8	263.5
20	52.0	370.3	139.4	230.9	277.1
25	45.2	326.6	139.4	187.3	280.9
30	40.0	294.1	139.4	154.7	278.4
35	36.1	268.7	139.4	129.3	271.6
40	32.9	248.4	139.4	109.0	261.7
45	30.2	231.7	139.4	92.3	249.3
50	28.0	217.7	139.4	78.4	235.1
55	26.2	205.8	139.4	66.5	219.3
60	24.6	195.6	139.4	56.2	202.4
65	23.2	186.6	139.4	47.3	184.3
70	21.9	178.8	139.4	39.4	165.4
75	20.8	171.8	139.4	32.4	145.8
80	19.8	165.5	139.4	26.1	125.5
85	18.9	159.9	139.4	20.5	104.6
90	18.1	154.8	139.4	15.4	83.3
95	17.4	150.2	139.4	10.8	61.4
100	16.7	145.9	139.4	6.5	39.2
105	16.1	142.0	139.4	2.6	16.6

‡ Includes controlled flow from BLDG A-G
‡‡ Does not Incude maintenance structure or sewer storage

2-year $Q_{attenuated}$ **139.38 L/s**
2-year Max. Storage Required **281 m^3**
Est. 2-year Storage Elevation **102.57 m**

PREVIOUSLY APPROVED (D07-12-17-0186)

Iber Hazeldean Land Limited
5734-5754 Hazeldean Road/24 Iber Road
Storm Sewer Calculation Sheet

										Sewer Data								
Area ID	Up	Down	Area	C	Indiv AxC	Acc AxC	T_C	I	Q_{TOTAL}	DIA	Slope	Length	$A_{hydraulic}$	R	Velocity	Qcap	Time Flow	Q / Q full
			(ha)	(-)			(min)	(mm/hr)	(L/s)	(mm)	(%)	(m)	(m^2)	(m)	(m/s)	(L/s)	(min)	(-)
	BLDG A	STM113	0.190	0.90	0.17	0.17	10.0	104.2	1.5	250	1.00	7.9	0.049	0.063	1.21	59.5	0.1	0.03
							10.1											
A32	CBMH37	CBMH114	0.062	0.55	0.03	0.03	10.1	103.6	9.8	250	0.47	21.9	0.049	0.063	0.83	40.8	0.4	0.24
A31	CBMH114	STM113	0.046	0.85	0.04	0.07	10.5	101.4	20.6	250	0.44	22.7	0.049	0.063	0.80	39.4	0.5	0.52
							11.0											
	BLDG C	STM113	0.288	0.90	0.26	0.26	10.0	104.2	14.2	300	1.00	2.6	0.071	0.075	1.37	96.7	0.0	0.15
							10.0											
A30	CICB35/36	STM113	0.055	0.75	0.04	0.04	10.0	104.2	11.9	200	1.00	6	0.031	0.050	1.04	32.8	0.1	0.36
							10.1											
	STM113	STM113A			0.00	0.28	11.0	99.1	94.1	450	0.25	37.2	0.159	0.113	0.90	142.6	0.7	0.66
							11.7											
A29	CICB33/34	STM113A	0.042	0.85	0.04	0.04	10.0	104.2	10.2	200	1.00	5.9	0.031	0.050	1.04	32.8	0.1	0.31
							10.1											
A28	CICB31/32	STM113A	0.091	0.83	0.08	0.08	10.0	104.2	21.8	200	1.00	5.9	0.031	0.050	1.04	32.8	0.1	0.66
							10.1											
	STM113A	STM104			0.00	0.40	11.7	95.9	121.1	450	0.25	70	0.159	0.113	0.90	142.6	1.3	0.85
							13.0											
A19	CB25	CBMH108	0.251	0.80	0.20	0.20	10.0	104.2	58.5	300	1.00	17.3	0.071	0.075	1.37	96.7	0.2	0.60
A20	CBMH108	STM107	0.111	0.81	0.09	0.29	10.2	103.1	83.5	450	0.29	14	0.159	0.113	0.97	153.5	0.2	0.54
							10.5											
A18	CB24	STM107	0.020	0.24	0.00	0.00	10.0	104.2	1.4	200	1.00	31.7	0.031	0.050	1.04	32.8	0.5	0.04
							10.5											
	BLDG B	STM107	0.140	0.90	0.13	0.13	10.0	104.2	7.1	250	1.00	3.7	0.049	0.063	1.21	59.5	0.1	0.12
							10.1											
	STM107	STM106			0.00	0.30	10.5	101.6	90.7	450	0.25	20.3	0.159	0.113	0.90	142.6	0.4	0.64
							10.9											
A22	CB27	CB26	0.055	0.86	0.05	0.05	10.0	104.2	13.6	200	1.00	3.1	0.031	0.050	1.04	32.8	0.0	0.42
A21	CB26	CBMH109	0.073	0.87	0.06	0.11	10.0	103.9	31.9	250	1.00	19.9	0.049	0.063	1.21	59.5	0.3	0.54
							10.3											
A24	CB28	CBMH109	0.028	0.84	0.02	0.02	10.0	104.2	6.8	200	1.00	3	0.031	0.050	1.04	32.8	0.0	0.21
							10.0											
A24	CBMH109	STM106	0.028	0.84	0.02	0.16	10.3	102.5	44.9	375	0.26	11.4	0.110	0.094	0.81	89.4	0.2	0.50
							10.6											
	STM106	STM105			0.00	0.45	10.9	99.7	132.9	525	0.26	19.2	0.216	0.131	1.01	219.3	0.3	0.61
							11.2											
A25	CB29	CBMH110	0.166	0.80	0.13	0.13	10.0	104.2	38.5	250	1.00	17.3	0.049	0.063	1.21	59.5	0.2	0.65
A26	CBMH110	STM105	0.052	0.86	0.05	0.18	10.2	103.0	51.0	375	0.36	14	0.110	0.094	0.95	105.2	0.2	0.48
							10.5											
	BLDG BB	STM105	0.041	0.90	0.04	0.04	10.0	104.2	2.3	250	1.00	3.7	0.049	0.063	1.21	59.5	0.1	0.04
							10.1											
A27	CB30	STM105	0.025	0.70	0.02	0.02	10.0	104.2	5.1	200	1.00	12.3	0.031	0.050	1.04	32.8	0.2	0.16
							10.2											
	STM105	STM104			0.00	0.65	11.2	98.3	186.8	525	0.22	27	0.216	0.131	0.93	201.7	0.5	0.93
							11.7											
A17	CB23	STM112	0.070	0.90	0.06	0.06	10.0	104.2	18.3	250	0.44	54.2	0.049	0.063	0.80	39.4	1.1	0.46
							11.1											
A16	CB22	STM112	0.074	0.75	0.06	0.06	10.0	104.2	16.1	250	1.00	5.7	0.049	0.063	1.21	59.5	0.1	0.27
							10.1											
A15	CB21	STM112	0.052	0.80	0.04	0.04	10.0	104.2	12.0	250	1.00	5.7	0.049	0.063	1.21	59.5	0.1	0.20
							10.1											
	STM112	STM111			0.00	0.16	11.1	98.6	43.9	375	0.25	36.3	0.110	0.094	0.79	87.7	0.8	0.50
							11.9											

PREVIOUSLY APPROVED (D07-12-17-0186)

Iber Hazeldean Land Limited
5734-5754 Hazeldean Road/24 Iber Road
Storm Sewer Calculation Sheet

A14	CB20	STM111	0.136	0.77	0.11	0.11	10.0	104.2	30.4	200	1.00	11.6	0.031	0.050	1.04	32.8	0.2	0.93
							10.2											
A13	CB19	STM111	0.125	0.84	0.10	0.10	10.0	104.2	30.3	200	1.00	19.4	0.031	0.050	1.04	32.8	0.3	0.92
							10.3											
A12	CB18	STM111	0.141	0.88	0.12	0.12	10.0	104.2	35.8	250	1.00	12.2	0.049	0.063	1.21	59.5	0.2	0.60
							10.2											
A11	CB17	STM111	0.071	0.85	0.06	0.06	10.0	104.2	17.3	200	1.00	19.4	0.031	0.050	1.04	32.8	0.3	0.53
							10.3											
A10	CB16	STM111	0.116	0.87	0.10	0.10	10.0	104.2	29.2	250	1.00	12.2	0.049	0.063	1.21	59.5	0.2	0.49
							10.2											
A9	CB15	STM111	0.121	0.86	0.10	0.10	10.0	104.2	30.2	200	1.00	19.3	0.031	0.050	1.04	32.8	0.3	0.92
							10.3											
A8	CB14	STM111	0.121	0.87	0.11	0.11	10.0	104.2	30.5	250	1.00	12.2	0.049	0.063	1.21	59.5	0.2	0.51
							10.2											
A7	CB13	STM111	0.058	0.81	0.05	0.05	10.0	104.2	13.7	250	1.00	12.3	0.049	0.063	1.21	59.5	0.2	0.23
							10.2											
	STM111	STM104			0.00	0.91	11.9	95.2	241.1	600	0.25	88.8	0.283	0.150	1.09	307.0	1.4	0.79
							13.2											
A6	CICB11/12	STM104	0.039	0.81	0.03	0.03	10.0	104.2	9.1	200	1.00	5.8	0.031	0.050	1.04	32.8	0.1	0.28
							10.1											
	STM104	STM101B			0.00	1.99	13.2	89.7	520.5	900	0.13	39.9	0.636	0.225	1.03	652.7	0.6	0.80
							13.9											
A5	CICB9/10	STM102	0.072	0.73	0.05	0.05	10.0	104.2	15.2	200	1.00	6.2	0.031	0.050	1.04	32.8	0.1	0.46
							10.1											
A4	CICB6/7	STM102	0.121	0.78	0.09	0.09	10.0	104.2	27.3	200	1.00	6.2	0.031	0.050	1.04	32.8	0.1	0.83
							10.1											
	STM102	STM101B			0.00	0.15	10.1	103.7	42.3	300	0.35	71.2	0.071	0.075	0.81	57.2	1.5	0.74
							11.6											
A2	CB3/5	STM101B	0.036	0.79	0.03	0.03	10.0	104.2	8.3	200	1.00	2.1	0.031	0.050	1.04	32.8	0.0	0.25
							10.0											
	FUT. BLDG G	STM103	0.097	0.90			10.0	104.2	5.8	250	1.00	34.6	0.049	0.063	1.21	59.5	0.5	0.10
							10.5											
A3	CB4	STM103	0.303	0.86	0.26	0.26	10.0	104.2	75.6	300	1.00	26.8	0.071	0.075	1.37	96.7	0.3	0.78
							10.3											
	BLDG D	STM103	0.101	0.90			10.0	104.2	5.8	250	1.00	3.5	0.049	0.063	1.21	59.5	0.0	0.10
							10.0											
	STM103	STM101B			0.00	0.26	10.5	101.7	85.4	375	0.38	47.3	0.110	0.094	0.98	108.1	0.8	0.79
							11.3											
A1	CICB1/2	STM101B	0.040	0.66	0.03	0.03	10.0	104.2	7.7	200	1.00	5.9	0.031	0.050	1.04	32.8	0.1	0.24
							10.1											
	STM101B	STM101A			0.00	2.45	13.9	87.3	631.3	900	0.15	46.5	0.636	0.225	1.10	701.1	0.7	0.90
	STM101A	EF 10			0.00	2.45	14.6	84.9	614.7	900	0.40	2.8	0.636	0.225	1.80	1144.9	0.0	0.54
	EF 10	STM100			0.00	2.45	14.6	84.8	614.2	900	0.13	22.8	0.636	0.225	1.03	652.7	0.4	0.94
	STM100	OUTLET			0.00	2.45	15.0	83.6	605.9	675	1.00	2.3	0.358	0.169	2.35	840.6	0.0	0.72
							15.0											
Controlled Flow**																		
	STM101B	STM101A			0.00	0.46	13.9	87.3	631.3	900	0.15	46.5	0.636	0.225	1.10	701.1	0.7	0.90
	STM101A	EF 10			0.00	0.46	14.6	84.9	216.4	675	0.40	2.8	0.358	0.169	1.49	531.6	0.0	0.41
	EF 10	STM100			0.00	0.46	14.6	84.8	216.4	675	0.13	22.8	0.358	0.169	0.85	303.1	0.4	0.71
	STM100	OUTLET			0.00	0.46	15.1	83.3	216.4	675	1.00	2.3	0.358	0.169	2.35	840.6	0.0	0.26
							15.1											

** The controlled 100-year release rate is used downstream of the orifice

Note:

1) There is a Stormceptor located between STM 101A and STM 100.

2) Flows from buildings are controlled based on the 5-year storm and included within Qtotal.

PREVIOUSLY APPROVED (D07-12-17-0186)

Storm Sewer Calculation Sheet
5734-5754 Hazeldean Road/24 Iber Road

			5-YEAR			100-YEAR		
AREA ID	TOTAL AREA(m²)	TOTAL AREA(ha)	PERV(0.20)	IMP(0.90)	C-VALUE	PERV(0.25)	IMP(1.125)	C-VALUE
A1	402.53	0.040	135.60	266.93	0.66	135.60	266.93	1.00
A2	364.86	0.036	58.03	306.82	0.79	58.03	306.82	1.00
A3	3030.47	0.303	165.75	2864.72	0.86	165.75	2864.72	1.00
A4	1211.59	0.121	210.77	1000.82	0.78	211.09	1000.50	1.00
A5	722.59	0.072	177.75	544.83	0.73	177.75	544.83	1.00
A6	386.91	0.039	48.59	338.32	0.81	48.59	338.32	1.00
A7	582.93	0.058	72.02	510.91	0.81	72.02	510.91	1.00
A8	1206.34	0.121	44.70	1161.64	0.87	44.70	1161.64	1.00
A9	1211.51	0.121	64.59	1146.92	0.86	64.59	1146.92	1.00
A10	1159.65	0.116	49.12	1110.53	0.87	49.12	1110.53	1.00
A11	705.91	0.071	54.88	651.03	0.85	54.88	651.03	1.00
A12	1412.76	0.141	48.18	1364.58	0.88	48.18	1364.58	1.00
A13	1250.25	0.125	113.18	1137.07	0.84	113.18	1137.07	1.00
A14	1357.19	0.136	243.64	1113.55	0.77	243.64	1113.55	1.00
A15	520.38	0.052	77.50	442.88	0.80	77.50	442.88	1.00
A16	742.26	0.074	159.76	582.51	0.75	159.76	582.51	1.00
A17	702.69	0.070	0.00	702.69	0.90	0.00	702.69	1.00
A18	202.61	0.020	190.84	11.77	0.24	190.84	11.77	1.00
A19	2512.48	0.251	343.54	2168.95	0.80	343.54	2168.95	1.00
A20	1109.91	0.111	150.03	959.88	0.81	150.03	959.88	1.00
A21	727.30	0.073	27.94	699.36	0.87	27.94	699.36	1.00
A22	545.42	0.055	27.94	517.48	0.86	27.94	517.48	1.00
A23	367.58	0.037	23.25	344.34	0.86	23.25	344.34	1.00
A24	280.15	0.028	23.25	256.91	0.84	23.25	256.91	1.00
A25	1655.33	0.166	226.44	1428.89	0.80	226.44	1428.89	1.00
A26	523.77	0.052	29.28	494.49	0.86	29.28	494.49	1.00
A27	251.47	0.025	70.75	180.72	0.70	70.75	180.72	1.00
A28	907.23	0.091	91.75	815.48	0.83	91.75	815.48	1.00
A29	415.98	0.042	30.45	385.52	0.85	30.45	385.52	1.00
A30	549.74	0.055	120.06	429.69	0.75	120.06	429.69	1.00
A31	459.11	0.046	33.81	425.29	0.85	33.81	425.29	1.00
A32	620.12	0.062	311.01	309.11	0.55	311.01	309.11	1.00
BLDG A	1895.82	0.190	0.00	1895.82	0.90	0.00	1895.82	1.00
BLDG B	1404.15	0.140	0.00	1404.15	0.90	0.00	1404.15	1.00
BLDG BB	409.82	0.041	0.00	409.82	0.90	0.00	409.82	1.00
BLDG C	2884.52	0.288	0.00	2884.52	0.90	0.00	2884.52	1.00
BLDG D	1014.34	0.101	0.00	1014.34	0.90	0.00	1014.34	1.00
BLDG G	970.30	0.097	0.00	970.30	0.90	0.00	970.30	1.00
U1	6790.56	0.679	6427.82	362.74	0.24	6419.46	371.10	1.00
U2	786.12	0.079	353.58	432.54	0.59	353.58	432.54	1.00
U3	154.46	0.015	0.00	154.46	0.90	0.00	154.46	1.00
AREA A	28099.02	2.810	3424.38	24674.65	0.81	3424.70	24674.33	1.00
AREA A+BLDG	36677.97	3.668	3424.38	33253.59	0.83	3424.70	33253.27	1.00
TOTAL	44380.56	4.438	10205.78	34203.33	0.74	10197.74	34182.82	1.00

PONDING AREAS

Elevation	Area(m²)
103.30	150.33
103.35	795.76
103.40	2067.20
103.55	8923.66

Site Servicing and Stormwater Management Brief
For Iber Hazeldean Land Limited

5754 Hazeldean Road / 24 Iber Road / 5734 Hazeldean Road
September 2019 – REV 1

Proposed Amended Appendix D – Stormwater Management

Stormwater - Proposed Development
City of Ottawa Sewer Design Guidelines, 2012

Target Flow Rate

Site Area 4.44 ha
C 0.74 Rational Method runoff coefficient

	5-year			100-year	
t_c (min)	i (mm/hr)	Q_{actual} (L/s)	i (mm/hr)	Q_{actual} (L/s)
21.4	67.4	271.6	115.0	463.6

Estimated Post Development Peak Flow from Unattenuated Areas

Area ID U1
Total Area 0.679 ha
C 0.24 Rational Method runoff coefficient

	5-year					100-year				
t_c (min)	i (mm/hr)	Q_{actual} (L/s)	$Q_{release}$ (L/s)	Q_{stored} (L/s)	V_{stored} (m^3)	i (mm/hr)	Q_{actual} (L/s)	$Q_{release}$ (L/s)	Q_{stored} (L/s)	V_{stored} (m^3)
15.1	83.2	37.3	37.3	0.0	0.0	142.4	79.7	79.7	0.0	0.0

Area ID U2
Total Area 0.079 ha
C 0.59 Rational Method runoff coefficient

	5-year					100-year				
t_c (min)	i (mm/hr)	Q_{actual} (L/s)	$Q_{release}$ (L/s)	Q_{stored} (L/s)	V_{stored} (m^3)	i (mm/hr)	Q_{actual} (L/s)	$Q_{release}$ (L/s)	Q_{stored} (L/s)	V_{stored} (m^3)
15.1	83.2	10.6	10.6	0.0	0.0	142.4	22.7	22.7	0.0	0.0

Area ID U3
Total Area 0.015 ha
C 0.90 Rational Method runoff coefficient

	5-year					100-year				
t_c (min)	i (mm/hr)	Q_{actual} (L/s)	$Q_{release}$ (L/s)	Q_{stored} (L/s)	V_{stored} (m^3)	i (mm/hr)	Q_{actual} (L/s)	$Q_{release}$ (L/s)	Q_{stored} (L/s)	V_{stored} (m^3)
15.1	83.2	3.2	3.2	0.0	0.0	142.4	6.1	6.1	0.0	0.0

Estimated Post Development Storage Requirement

Building ID	**BLDG A**		
Roof Area	0.190	ha	
Avail Storage Area	0.180		
C	0.90	Rational Method runoff coefficient	*Note: Rational Method Coefficient "C" increased by 25% for 100-year calculations*
t_c	10	min, tc at outlet without restriction	

Estimated Number of Roof Drains

Building Length	86.6	
Building Width	22.3	
Number of Drains	9	
m^2 / Drain	200.1	max 232.25m^2/notch as recommended by Zurn for Ottawa

Roof Top Rating Curve per Zurn Model Z-105-5

d (m)	A (m^2)	V_{acc} (m^3)	V_{avail} (m^3)	Q_{notch} (L/s)	Q_{roof} (L/s)	$V_{drawdown}$ (hr)
0.000	0	0.0	0.0	0.00	0.00	0.00
0.025	112.6	0.9	0.9	0.38	3.42	0.08
0.050	450.3	6.6	7.5	0.77	6.93	0.34
0.075	1013.1	17.8	25.3	1.14	10.26	0.82
0.100	1801.0	34.7	60.0	1.52	13.68	1.53
0.125	1801.0	45.0	105.1	1.90	17.10	2.26
0.150	1801.0	45.0	150.1	2.28	20.52	2.87

* Assumes one notch opening per drain, assumes maximum slope of 10cm

	5-year					100-year				
t_c (min)	i (mm/hr)	Q_{actual} (L/s)	$Q_{release}$ (L/s)	Q_{stored} (L/s)	V_{stored} (m^3)	i (mm/hr)	Q_{actual} (L/s)	$Q_{release}$ (L/s)	Q_{stored} (L/s)	V_{stored} (m^3)
10	104.2	49.4	10.5	38.9	23.3	178.6	94.0	13.8	80.2	48.1
15	83.6	39.6	10.5	29.1	26.2	142.9	75.3	13.8	61.4	55.3
20	70.3	33.3	10.5	22.8	27.4	120.0	63.2	13.8	49.3	59.2
25	60.9	28.9	10.5	18.4	27.6	103.8	54.7	13.8	40.8	61.3
30	53.9	25.6	10.5	15.1	27.1	91.9	48.4	13.8	34.5	62.2
35	48.5	23.0	10.5	12.5	26.3	82.6	43.5	13.8	29.6	62.2
40	44.2	20.9	10.5	10.5	25.1	75.1	39.6	13.8	25.7	61.7
45	40.6	19.3	10.5	8.8	23.7	69.1	36.4	13.8	22.5	60.8
50	37.7	17.8	10.5	7.4	22.1	64.0	33.7	13.8	19.8	59.5
55	35.1	16.6	10.5	6.2	20.3	59.6	31.4	13.8	17.6	57.9
60	32.9	15.6	10.5	5.1	18.5	55.9	29.4	13.8	15.6	56.1
65	31.0	14.7	10.5	4.2	16.5	52.6	27.7	13.8	13.9	54.1
70	29.4	13.9	10.5	3.4	14.4	49.8	26.2	13.8	12.4	52.0
75	27.9	13.2	10.5	2.7	12.3	47.3	24.9	13.8	11.0	49.7
80	26.6	12.6	10.5	2.1	10.1	45.0	23.7	13.8	9.8	47.3
85	25.4	12.0	10.5	1.5	7.9	43.0	22.6	13.8	8.8	44.7
90	24.3	11.5	10.5	1.0	5.6	41.1	21.6	13.8	7.8	42.1
95	23.3	11.0	10.5	0.6	3.2	39.4	20.8	13.8	6.9	39.4
100	22.4	10.6	10.5	0.1	0.8	37.9	20.0	13.8	6.1	36.7
105	21.6	10.2	10.2	0.0	0.0	36.5	19.2	13.8	5.4	33.8
110	20.8	9.9	9.9	0.0	0.0	35.2	18.5	13.8	4.7	31.0

5-year Q_{roof}	**10.48**	**L/s**	**100-year Q_{roof}**	**13.85**	**L/s**
5-year Max. Storage Required	**27.6**	**m^3**	**100-year Max. Storage Required**	**62.2**	**m^3**
5-year Storage Depth	**0.077**	**m**	**100-year Storage Depth**	**0.101**	**m**
5-year Estimated Drawdown Time	**0.87**	**hr**	**100-year Estimated Drawdown Time**	**1.56**	**hr**

Iber Hazeldean Land Limited
5734-5754 Hazeldean Road/24 Iber Road
Proposed Site Conditions

Building ID	**BLDG B**	
Roof Area	0.140	ha
Avail Storage Area	0.133	
C	0.90	Rational Method runoff coefficient
t_c	10	min, tc at outlet without restriction

Note: Rational Method Coefficient "C" increased by 25% for 100-year calculations

Estimated Number of Roof Drains

Building Length	58.0	
Building Width	24.0	
Number of Drains	6	
m^2 / Drain	222.3	max 232.25m^2/notch as recommended by Zurn for Ottawa

Roof Top Rating Curve per Zurn Model Z-105-5

d (m)	A (m^2)	V_{acc} (m^3)	V_{avail} (m^3)	Q_{notch} (L/s)	Q_{roof} (L/s)	$V_{drawdown}$ (hr)
0.000	0	0.0	0.0	0.00	0.00	0.00
0.025	83.4	0.7	0.7	0.38	2.28	0.08
0.050	333.5	4.9	5.6	0.77	4.62	0.38
0.075	750.3	13.2	18.8	1.14	6.84	0.91
0.100	1333.9	25.7	44.5	1.52	9.12	1.70
0.125	1333.9	33.3	77.8	1.90	11.40	2.51
0.150	1333.9	33.3	111.2	2.28	13.68	3.19

* Assumes one notch opening per drain, assumes maximum slope of 10cm

	5-year					100-year				
t_c (min)	i (mm/hr)	Q_{actual} (L/s)	$Q_{release}$ (L/s)	Q_{stored} (L/s)	V_{stored} (m^3)	i (mm/hr)	Q_{actual} (L/s)	$Q_{release}$ (L/s)	Q_{stored} (L/s)	V_{stored} (m^3)
10	104.2	36.6	7.1	29.5	17.7	178.6	69.6	9.4	60.3	36.2
15	83.6	29.3	7.1	22.3	20.0	142.9	55.7	9.4	46.4	41.7
20	70.3	24.7	7.1	17.6	21.1	120.0	46.8	9.4	37.4	44.9
25	60.9	21.4	7.1	14.3	21.4	103.8	40.5	9.4	31.1	46.7
30	53.9	18.9	7.1	11.9	21.3	91.9	35.8	9.4	26.5	47.6
35	48.5	17.0	7.1	10.0	20.9	82.6	32.2	9.4	22.8	48.0
40	44.2	15.5	7.1	8.4	20.2	75.1	29.3	9.4	19.9	47.9
45	40.6	14.3	7.1	7.2	19.4	69.1	26.9	9.4	17.6	47.4
50	37.7	13.2	7.1	6.1	18.4	64.0	24.9	9.4	15.6	46.8
55	35.1	12.3	7.1	5.3	17.3	59.6	23.3	9.4	13.9	45.9
60	32.9	11.6	7.1	4.5	16.1	55.9	21.8	9.4	12.4	44.8
65	31.0	10.9	7.1	3.8	14.9	52.6	20.5	9.4	11.2	43.6
70	29.4	10.3	7.1	3.2	13.6	49.8	19.4	9.4	10.1	42.2
75	27.9	9.8	7.1	2.7	12.2	47.3	18.4	9.4	9.1	40.8
80	26.6	9.3	7.1	2.2	10.8	45.0	17.5	9.4	8.2	39.3
85	25.4	8.9	7.1	1.8	9.3	43.0	16.8	9.4	7.4	37.7
90	24.3	8.5	7.1	1.4	7.8	41.1	16.0	9.4	6.7	36.0
95	23.3	8.2	7.1	1.1	6.3	39.4	15.4	9.4	6.0	34.3
100	22.4	7.9	7.1	0.8	4.7	37.9	14.8	9.4	5.4	32.5
105	21.6	7.6	7.1	0.5	3.1	36.5	14.2	9.4	4.9	30.7
110	20.8	7.3	7.1	0.2	1.5	35.2	13.7	9.4	4.4	28.8

5-year Q_{roof}	**7.08**	**L/s**	**100-year Q_{roof}**	**9.36**	**L/s**
5-year Max. Storage Required	**21.4**	**m^3**	**100-year Max. Storage Required**	**48.0**	**m^3**
5-year Storage Depth	**0.078**	**m**	**100-year Storage Depth**	**0.103**	**m**
5-year Estimated Drawdown Time	**1.00**	**hr**	**100-year Estimated Drawdown Time**	**1.78**	**hr**

Iber Hazeldean Land Limited
5734-5754 Hazeldean Road/24 Iber Road
Proposed Site Conditions

Building ID	**BLDG BB**	
Roof Area	0.041	ha
Avail Storage Area	0.039	
C	0.90	Rational Method runoff coefficient
t_c	10	min, tc at outlet without restriction

Note: Rational Method Coefficient "C" increased by 25% for 100-year calculations

Estimated Number of Roof Drains

Building Length	15.5	
Building Width	24.0	
Number of Drains	2	
m^2 / Drain	194.7	max 232.25m^2/notch as recommended by Zurn for Ottawa

Roof Top Rating Curve per Zurn Model Z-105-5

d (m)	A (m^2)	V_{acc} (m^3)	V_{avail} (m^3)	Q_{notch} (L/s)	Q_{roof} (L/s)	$V_{drawdown}$ (hr)
0.000	0	0.0	0.0	0.00	0.00	0.00
0.025	24.3	0.2	0.2	0.38	0.76	0.07
0.050	97.3	1.4	1.6	0.77	1.54	0.33
0.075	219.0	3.9	5.5	1.14	2.28	0.80
0.100	389.3	7.5	13.0	1.52	3.04	1.49
0.125	389.3	9.7	22.7	1.90	3.80	2.20
0.150	389.3	9.7	32.4	2.28	4.56	2.79

* Assumes one notch opening per drain, assumes maximum slope of 10cm

	5-year					100-year				
t_c (min)	i (mm/hr)	Q_{actual} (L/s)	$Q_{release}$ (L/s)	Q_{stored} (L/s)	V_{stored} (m^3)	i (mm/hr)	Q_{actual} (L/s)	$Q_{release}$ (L/s)	Q_{stored} (L/s)	V_{stored} (m^3)
10	104.2	10.7	2.3	8.4	5.0	178.6	20.3	3.1	17.3	10.4
15	83.6	8.6	2.3	6.2	5.6	142.9	16.3	3.1	13.2	11.9
20	70.3	7.2	2.3	4.9	5.9	120.0	13.7	3.1	10.6	12.7
25	60.9	6.2	2.3	3.9	5.9	103.8	11.8	3.1	8.8	13.1
30	53.9	5.5	2.3	3.2	5.8	91.9	10.5	3.1	7.4	13.3
35	48.5	5.0	2.3	2.7	5.6	82.6	9.4	3.1	6.3	13.3
40	44.2	4.5	2.3	2.2	5.3	75.1	8.6	3.1	5.5	13.2
45	40.6	4.2	2.3	1.8	5.0	69.1	7.9	3.1	4.8	12.9
50	37.7	3.9	2.3	1.5	4.6	64.0	7.3	3.1	4.2	12.6
55	35.1	3.6	2.3	1.3	4.2	59.6	6.8	3.1	3.7	12.3
60	32.9	3.4	2.3	1.1	3.8	55.9	6.4	3.1	3.3	11.9
65	31.0	3.2	2.3	0.9	3.4	52.6	6.0	3.1	2.9	11.4
70	29.4	3.0	2.3	0.7	2.9	49.8	5.7	3.1	2.6	10.9
75	27.9	2.9	2.3	0.5	2.4	47.3	5.4	3.1	2.3	10.4
80	26.6	2.7	2.3	0.4	1.9	45.0	5.1	3.1	2.1	9.9
85	25.4	2.6	2.3	0.3	1.4	43.0	4.9	3.1	1.8	9.3
90	24.3	2.5	2.3	0.2	0.9	41.1	4.7	3.1	1.6	8.7
95	23.3	2.4	2.3	0.1	0.4	39.4	4.5	3.1	1.4	8.1
100	22.4	2.3	2.3	0.0	0.0	37.9	4.3	3.1	1.2	7.5
105	21.6	2.2	2.2	0.0	0.0	36.5	4.2	3.1	1.1	6.9
110	20.8	2.1	2.1	0.0	0.0	35.2	4.0	3.1	0.9	6.2

5-year Q_{roof}	**2.32 L/s**	**100-year Q_{roof}**	**3.07 L/s**
5-year Max. Storage Required	**5.9 m^3**	**100-year Max. Storage Required**	**13.3 m^3**
5-year Storage Depth	**0.076 m**	**100-year Storage Depth**	**0.101 m**
5-year Estimated Drawdown Time	**0.84 hr**	**100-year Estimated Drawdown Time**	**1.51 hr**

Iber Hazeldean Land Limited
5734-5754 Hazeldean Road/24 Iber Road
Proposed Site Conditions

Building ID	**BLDG C**	
Roof Area	0.288	ha
Avail Storage Area	0.274	
C	0.90	Rational Method runoff coefficient
t_c	10	min, tc at outlet without restriction

Note: Rational Method Coefficient "C" increased by 25% for 100-year calculations

Estimated Number of Roof Drains

Building Length	64.2	
Building Width	43.8	
Number of Drains	12	
m^2 / Drain	228.4	max 232.25m^2/notch as recommended by Zurn for Ottawa

Roof Top Rating Curve per Zurn Model Z-105-5

d (m)	A (m^2)	V_{acc} (m^3)	V_{avail} (m^3)	Q_{notch} (L/s)	Q_{roof} (L/s)	$V_{drawdown}$ (hr)
0.000	0	0.0	0.0	0.00	0.00	0.00
0.025	171.3	1.4	1.4	0.38	4.56	0.09
0.050	685.1	10.0	11.4	0.77	9.24	0.39
0.075	1541.4	27.1	38.5	1.14	13.68	0.94
0.100	2740.3	52.8	91.3	1.52	18.24	1.74
0.125	2740.3	68.5	159.9	1.90	22.80	2.58
0.150	2740.3	68.5	228.4	2.28	27.36	3.27

* Assumes one notch opening per drain, assumes maximum slope of 10cm

	5-year					100-year				
t_c (min)	i (mm/hr)	Q_{actual} (L/s)	$Q_{release}$ (L/s)	Q_{stored} (L/s)	V_{stored} (m^3)	i (mm/hr)	Q_{actual} (L/s)	$Q_{release}$ (L/s)	Q_{stored} (L/s)	V_{stored} (m^3)
10	104.2	75.1	14.2	60.9	36.6	178.6	143.1	18.8	124.3	74.6
15	83.6	60.3	14.2	46.1	41.4	142.9	114.5	18.8	95.7	86.1
20	70.3	50.7	14.2	36.5	43.8	120.0	96.1	18.8	77.3	92.8
25	60.9	43.9	14.2	29.7	44.6	103.8	83.2	18.8	64.4	96.6
30	53.9	38.9	14.2	24.7	44.4	91.9	73.6	18.8	54.8	98.7
35	48.5	35.0	14.2	20.8	43.7	82.6	66.2	18.8	47.4	99.5
40	44.2	31.9	14.2	17.7	42.4	75.1	60.2	18.8	41.4	99.4
45	40.6	29.3	14.2	15.1	40.8	69.1	55.3	18.8	36.5	98.7
50	37.7	27.2	14.2	13.0	38.9	64.0	51.2	18.8	32.5	97.4
55	35.1	25.3	14.2	11.1	36.7	59.6	47.8	18.8	29.0	95.7
60	32.9	23.8	14.2	9.6	34.4	55.9	44.8	18.8	26.0	93.6
65	31.0	22.4	14.2	8.2	31.9	52.6	42.2	18.8	23.4	91.3
70	29.4	21.2	14.2	7.0	29.3	49.8	39.9	18.8	21.1	88.7
75	27.9	20.1	14.2	5.9	26.6	47.3	37.9	18.8	19.1	85.9
80	26.6	19.2	14.2	5.0	23.8	45.0	36.0	18.8	17.3	82.9
85	25.4	18.3	14.2	4.1	20.9	43.0	34.4	18.8	15.6	79.7
90	24.3	17.5	14.2	3.3	17.9	41.1	32.9	18.8	14.2	76.4
95	23.3	16.8	14.2	2.6	14.8	39.4	31.6	18.8	12.8	73.0
100	22.4	16.2	14.2	2.0	11.7	37.9	30.4	18.8	11.6	69.5
105	21.6	15.6	14.2	1.4	8.6	36.5	29.2	18.8	10.5	65.9
110	20.8	15.0	14.2	0.8	5.4	35.2	28.2	18.8	9.4	62.2

5-year Q_{roof}	**14.20**	**L/s**	**100-year Q_{roof}**	**18.78**	**L/s**
5-year Max. Storage Required	**44.6**	**m^3**	**100-year Max. Storage Required**	**99.5**	**m^3**
5-year Storage Depth	**0.078**	**m**	**100-year Storage Depth**	**0.103**	**m**
5-year Estimated Drawdown Time	**1.03**	**hr**	**100-year Estimated Drawdown Time**	**1.84**	**hr**

Iber Hazeldean Land Limited
5734-5754 Hazeldean Road/24 Iber Road
Proposed Site Conditions

Building ID	UT. BLDG G	
Roof Area	0.097	ha
Avail Storage Area	0.092	
C	0.90	Rational Method runoff coefficient
t_c	10	min, tc at outlet without restriction

Note: Rational Method Coefficient "C" increased by 25% for 100-year calculations

Estimated Number of Roof Drains		
Building Length	20.2	
Building Width	53.1	
Number of Drains	5	
m^2 / Drain	184.4	max 232.25m^2/notch as recommended by Zurn for Ottawa

Roof Top Rating Curve per Zurn Model Z-105-5

d (m)	A (m^2)	V_{acc} (m^3)	V_{avail} (m^3)	Q_{notch} (L/s)	Q_{roof} (L/s)	$V_{drawdown}$ (hr)
0.000	0	0.0	0.0	0.00	0.00	0.00
0.025	57.6	0.5	0.5	0.38	1.90	0.07
0.050	230.4	3.4	3.8	0.77	3.85	0.31
0.075	518.5	9.1	13.0	1.14	5.70	0.76
0.100	921.8	17.8	30.7	1.52	7.60	1.41
0.125	921.8	23.0	53.8	1.90	9.50	2.08
0.150	921.8	23.0	76.8	2.28	11.40	2.64

* Assumes one notch opening per drain, assumes maximum slope of 10cm

	5-year					100-year				
t_c (min)	i (mm/hr)	Q_{actual} (L/s)	$Q_{release}$ (L/s)	Q_{stored} (L/s)	V_{stored} (m^3)	i (mm/hr)	Q_{actual} (L/s)	$Q_{release}$ (L/s)	Q_{stored} (L/s)	V_{stored} (m^3)
10	104.2	25.3	5.8	19.5	11.7	178.6	48.1	7.6	40.5	24.3
15	83.6	20.3	5.8	14.5	13.1	142.9	38.5	7.6	30.9	27.8
20	70.3	17.0	5.8	11.3	13.5	120.0	32.3	7.6	24.7	29.7
25	60.9	14.8	5.8	9.0	13.5	103.8	28.0	7.6	20.4	30.6
30	53.9	13.1	5.8	7.3	13.2	91.9	24.8	7.6	17.1	30.9
35	48.5	11.8	5.8	6.0	12.6	82.6	22.3	7.6	14.6	30.8
40	44.2	10.7	5.8	5.0	11.9	75.1	20.3	7.6	12.6	30.3
45	40.6	9.9	5.8	4.1	11.1	69.1	18.6	7.6	11.0	29.7
50	37.7	9.1	5.8	3.4	10.1	64.0	17.2	7.6	9.6	28.9
55	35.1	8.5	5.8	2.8	9.1	59.6	16.1	7.6	8.5	27.9
60	32.9	8.0	5.8	2.2	8.0	55.9	15.1	7.6	7.5	26.8
65	31.0	7.5	5.8	1.8	6.9	52.6	14.2	7.6	6.6	25.7
70	29.4	7.1	5.8	1.4	5.7	49.8	13.4	7.6	5.8	24.4
75	27.9	6.8	5.8	1.0	4.5	47.3	12.7	7.6	5.1	23.1
80	26.6	6.4	5.8	0.7	3.3	45.0	12.1	7.6	4.5	21.7
85	25.4	6.2	5.8	0.4	2.0	43.0	11.6	7.6	4.0	20.2
90	24.3	5.9	5.8	0.1	0.7	41.1	11.1	7.6	3.5	18.7
95	23.3	5.7	5.7	0.0	0.0	39.4	10.6	7.6	3.0	17.2
100	22.4	5.4	5.4	0.0	0.0	37.9	10.2	7.6	2.6	15.6
105	21.6	5.2	5.2	0.0	0.0	36.5	9.8	7.6	2.2	14.0
110	20.8	5.1	5.1	0.0	0.0	35.2	9.5	7.6	1.9	12.4

5-year Q_{roof}	**5.76**	**L/s**	**100-year Q_{roof}**	**7.61** **L/s**
5-year Max. Storage Required	**13.5**	**m^3**	**100-year Max. Storage Required**	**30.9** **m^3**
5-year Storage Depth	**0.076**	**m**	**100-year Storage Depth**	**0.100** **m**
5-year Estimated Drawdown Time	**0.78**	**hr**	**100-year Estimated Drawdown Time**	**1.41** **hr**

Estimated Post Development Peak Flow from Attenuated Areas

Area ID A + BLDG D
Available Sub-surface Storage

Total U/G Storage Volume (m^3) 157.0

Stage Attenuated Areas Storage Summary

		Surface Storage			Surface and Subsurface Storage			
	Stage	Ponding	h_o	delta d	V*	V_{acc}**	$Q_{release}$†	$V_{drawdown}$
	(m)	(m^2)	(m)	(m)	(m^3)	(m^3)	(L/s)	(hr)
Orifice INV	101.44	-	0.00			0.0	0.0	0.00
Cistern INV	101.99	-	0.55	0.55	78.5	78.5	133.3	0.16
Cistern OBV	102.63	-	1.19	0.64	78.5	157.0	195.6	0.22
T/L1	103.25	0.4	1.81	0.63	0.1	157.1	241.8	0.18
T/L2	103.30	137.6	1.86	0.05	2.4	159.5	245.1	0.18
T/L3	103.35	745.2	1.91	0.05	20.0	179.6	248.4	0.20
0.15m Ponding	103.40	1953.5	1.96	0.05	65.1	244.6	251.6	0.27
Max Ponding	103.55	8389.9	2.11	0.15	719.6	964.2	261.0	1.03

* V=Incremental storage volume
**V_{acc}=Total surface and sub-surface
† $Q_{release}$ = Release rate calculated from orifice equation

$$Q = C_d \times A \times \sqrt{2 \times g \times h_o}$$

Where Q = *Release rate (cms)*
C_d = *Discharge Coefficient (0.61)*
A = *Area of the orifice(m^2)*
g = *gravitational constant (9.81m/s^2)*
$h_{o\,eff}$ = *Effective head above the orifice due to waterlevel at outlet*

Orifice Location **STM101** **Dia** 291
Total Area 2.91 ha
C 0.82 Rational Method runoff coefficient *Note: Rational Method Coefficient "C" increased by 25% for 100-year calculations*

	5-year					100-year				
t_c (min)	i (mm/hr)	Q_{actual}‡ (L/s)	$Q_{release}$ (L/s)	Q_{stored} (L/s)	V_{stored} (m^3)	i (mm/hr)	Q_{actual}‡ (L/s)	$Q_{release}$ (L/s)	Q_{stored} (L/s)	V_{stored} (m^3)
5	141.2	971.3	252.4	719.0	215.7	242.7	2013.5	261.0	1752.5	525.7
10	104.2	727.3	252.4	474.9	285.0	178.6	1495.3	261.0	1234.2	740.5
15	83.6	591.2	252.4	338.8	304.9	142.9	1207.1	261.0	946.1	851.5
20	70.3	503.4	252.4	251.0	301.2	120.0	1021.8	261.0	760.7	912.9
25	60.9	441.6	252.4	189.3	283.9	103.8	891.7	261.0	630.6	946.0
30	53.9	395.7	252.4	143.3	257.9	91.9	794.9	261.0	533.9	960.9
35	48.5	360.0	252.4	107.6	225.9	82.6	719.8	261.0	458.8	963.5
40	44.2	331.4	252.4	79.0	189.6	75.1	659.8	261.0	398.8	957.0
45	40.6	307.9	252.4	55.5	150.0	69.1	610.5	261.0	349.5	943.7
50	37.7	288.3	252.4	35.9	107.7	64.0	569.4	261.0	308.3	925.0
55	35.1	271.6	252.4	19.2	63.4	59.6	534.4	261.0	273.4	902.1
60	32.9	257.2	252.4	4.8	17.4	55.9	504.2	261.0	243.2	875.6
65	31.0	244.7	244.7	0.0	0.0	52.6	478.0	261.0	217.0	846.2
70	29.4	233.6	233.6	0.0	0.0	49.8	454.9	261.0	193.9	814.4
75	27.9	223.9	223.9	0.0	0.0	47.3	434.5	261.0	173.4	780.4
80	26.6	215.1	215.1	0.0	0.0	45.0	416.2	261.0	155.1	744.6
85	25.4	207.2	207.2	0.0	0.0	43.0	399.7	261.0	138.7	707.2
90	24.3	200.1	200.1	0.0	0.0	41.1	384.8	261.0	123.8	668.4
95	23.3	193.6	193.6	0.0	0.0	39.4	371.3	261.0	110.2	628.4
100	22.4	187.7	187.7	0.0	0.0	37.9	358.9	261.0	97.9	587.2
105	21.6	182.2	182.2	0.0	0.0	36.5	347.5	261.0	86.5	545.0

‡ Includes controlled flow from BLDG A-G

5-year $Q_{attenuated}$ **252.4 L/s** **100-year $Q_{attenuated}$** **261.0 L/s**
5-year Max. Storage Required **304.9 m^3** **100-year Max. Storage Required** **963.5 m^3**
Est. 5-year Storage Elevation **103.41 m** **Est. 100-year Storage Elevation** **103.55 m**

Summary of Release Rates and Storage Volumes

Control Area	5-Year Required Storage (m^3)	100-Year Required Storage (m^3)	100-Year Available Storage* (m^3)
U1	0.0	0.0	0.0
U2	0.0	0.0	0.0
U3	0.0	0.0	0.0
A1	304.9	963.5	964.2
Total	**304.9**	**963.5**	**964.2**

*Note Available Storage Not Including Structure and Sewer Storage

Stormwater - Proposed Development
City of Ottawa Sewer Design Guidelines, 2012

Target Flow Rate

			5-year		100-year	
		t_c (min)	i (mm/hr)	Q_{actual} (L/s)	i (mm/hr)	Q_{actual} (L/s)
Site Area	4.44 ha					
C	0.74 Rational Method runoff coefficient	21.4	67.4	271.6	115.0	463.6

Estimated Post Development Peak Flow from Unattenuated Areas

Area ID U1
Total Area 0.679 ha
C 0.24 Rational Method runoff coefficient

	5-year					100-year				
t_c (min)	i (mm/hr)	Q_{actual} (L/s)	$Q_{release}$ (L/s)	Q_{stored} (L/s)	V_{stored} (m^3)	i (mm/hr)	Q_{actual} (L/s)	$Q_{release}$ (L/s)	Q_{stored} (L/s)	V_{stored} (m^3)
15.1	83.2	37.3	37.3	0.0	0.0	142.4	79.7	79.7	0.0	0.0

Area ID U2
Total Area 0.079 ha
C 0.59 Rational Method runoff coefficient

	5-year					100-year				
t_c (min)	i (mm/hr)	Q_{actual} (L/s)	$Q_{release}$ (L/s)	Q_{stored} (L/s)	V_{stored} (m^3)	i (mm/hr)	Q_{actual} (L/s)	$Q_{release}$ (L/s)	Q_{stored} (L/s)	V_{stored} (m^3)
15.1	83.2	10.6	10.6	0.0	0.0	142.4	22.7	22.7	0.0	0.0

Area ID U3
Total Area 0.015 ha
C 0.90 Rational Method runoff coefficient

	5-year					100-year				
t_c (min)	i (mm/hr)	Q_{actual} (L/s)	$Q_{release}$ (L/s)	Q_{stored} (L/s)	V_{stored} (m^3)	i (mm/hr)	Q_{actual} (L/s)	$Q_{release}$ (L/s)	Q_{stored} (L/s)	V_{stored} (m^3)
15.1	83.2	3.2	3.2	0.0	0.0	142.4	6.1	6.1	0.0	0.0

5734-5754 Hazeldean Road/24 Iber Road
Proposed Site Conditions with Back Water

Estimated Post Development Storage Requirement

Building ID	**BLDG A**	
Roof Area	0.190	ha
Avail Storage Area	0.180	
C	0.90	Rational Method runoff coefficient
t_c	10	min, tc at outlet without restriction

Note: Rational Method Coefficient "C" increased by 25% for 100-year calculations

Estimated Number of Roof Drains

Building Length	86.6	
Building Width	22.3	
Number of Drains	9	
m^2 / Drain	200.1	max 232.25m^2/notch as recommended by Zurn for Ottawa

Roof Top Rating Curve per Zurn Model Z-105-5

d (m)	A (m^2)	V_{acc} (m^3)	V_{avail} (m^3)	Q_{notch} (L/s)	Q_{roof} (L/s)	$V_{drawdown}$ (hr)
0.000	0	0.0	0.0	0.00	0.00	0.00
0.025	112.6	0.9	0.9	0.38	3.42	0.08
0.050	450.3	6.6	7.5	0.77	6.93	0.34
0.075	1013.1	17.8	25.3	1.14	10.26	0.82
0.100	1801.0	34.7	60.0	1.52	13.68	1.53
0.125	1801.0	45.0	105.1	1.90	17.10	2.26
0.150	1801.0	45.0	150.1	2.28	20.52	2.87

* Assumes one notch opening per drain, assumes maximum slope of 10cm

	5-year					100-year				
t_c (min)	i (mm/hr)	Q_{actual} (L/s)	$Q_{release}$ (L/s)	Q_{stored} (L/s)	V_{stored} (m^3)	i (mm/hr)	Q_{actual} (L/s)	$Q_{release}$ (L/s)	Q_{stored} (L/s)	V_{stored} (m^3)
10	104.2	49.4	10.5	38.9	23.3	178.6	94.0	13.8	80.2	48.1
15	83.6	39.6	10.5	29.1	26.2	142.9	75.3	13.8	61.4	55.3
20	70.3	33.3	10.5	22.8	27.4	120.0	63.2	13.8	49.3	59.2
25	60.9	28.9	10.5	18.4	27.6	103.8	54.7	13.8	40.8	61.3
30	53.9	25.6	10.5	15.1	27.1	91.9	48.4	13.8	34.5	62.2
35	48.5	23.0	10.5	12.5	26.3	82.6	43.5	13.8	29.6	62.2
40	44.2	20.9	10.5	10.5	25.1	75.1	39.6	13.8	25.7	61.7
45	40.6	19.3	10.5	8.8	23.7	69.1	36.4	13.8	22.5	60.8
50	37.7	17.8	10.5	7.4	22.1	64.0	33.7	13.8	19.8	59.5
55	35.1	16.6	10.5	6.2	20.3	59.6	31.4	13.8	17.6	57.9
60	32.9	15.6	10.5	5.1	18.5	55.9	29.4	13.8	15.6	56.1
65	31.0	14.7	10.5	4.2	16.5	52.6	27.7	13.8	13.9	54.1
70	29.4	13.9	10.5	3.4	14.4	49.8	26.2	13.8	12.4	52.0
75	27.9	13.2	10.5	2.7	12.3	47.3	24.9	13.8	11.0	49.7
80	26.6	12.6	10.5	2.1	10.1	45.0	23.7	13.8	9.8	47.3
85	25.4	12.0	10.5	1.5	7.9	43.0	22.6	13.8	8.8	44.7
90	24.3	11.5	10.5	1.0	5.6	41.1	21.6	13.8	7.8	42.1
95	23.3	11.0	10.5	0.6	3.2	39.4	20.8	13.8	6.9	39.4
100	22.4	10.6	10.5	0.1	0.8	37.9	20.0	13.8	6.1	36.7
105	21.6	10.2	10.2	0.0	0.0	36.5	19.2	13.8	5.4	33.8
110	20.8	9.9	9.9	0.0	0.0	35.2	18.5	13.8	4.7	31.0

5-year Q_{roof}	**10.48**	**L/s**	**100-year Q_{roof}**	**13.85**	**L/s**
5-year Max. Storage Required	**27.6**	**m^3**	**100-year Max. Storage Required**	**62.2**	**m^3**
5-year Storage Depth	**0.077**	**m**	**100-year Storage Depth**	**0.101**	**m**
5-year Estimated Drawdown Time	**0.87**	**hr**	**100-year Estimated Drawdown Time**	**1.56**	**hr**

Iber Hazeldean Land Limited
5734-5754 Hazeldean Road/24 Iber Road
Proposed Site Conditions with Back Water

Building ID	**BLDG B**	
Roof Area	0.140	ha
Avail Storage Area	0.133	
C	0.90	Rational Method runoff coefficient
t_c	10	min, tc at outlet without restriction

Note: Rational Method Coefficient "C" increased by 25% for 100-year calculations

Estimated Number of Roof Drains

Building Length	58.0	
Building Width	24.0	
Number of Drains	6	
m^2 / Drain	222.3	max 232.25m^2/notch as recommended by Zurn for Ottawa

Roof Top Rating Curve per Zurn Model Z-105-5

d (m)	A (m^2)	V_{acc} (m^3)	V_{avail} (m^3)	Q_{notch} (L/s)	Q_{roof} (L/s)	$V_{drawdown}$ (hr)
0.000	0	0.0	0.0	0.00	0.00	0.00
0.025	83.4	0.7	0.7	0.38	2.28	0.08
0.050	333.5	4.9	5.6	0.77	4.62	0.38
0.075	750.3	13.2	18.8	1.14	6.84	0.91
0.100	1333.9	25.7	44.5	1.52	9.12	1.70
0.125	1333.9	33.3	77.8	1.90	11.40	2.51
0.150	1333.9	33.3	111.2	2.28	13.68	3.19

* Assumes one notch opening per drain, assumes maximum slope of 10cm

	5-year					100-year				
t_c (min)	i (mm/hr)	Q_{actual} (L/s)	$Q_{release}$ (L/s)	Q_{stored} (L/s)	V_{stored} (m^3)	i (mm/hr)	Q_{actual} (L/s)	$Q_{release}$ (L/s)	Q_{stored} (L/s)	V_{stored} (m^3)
10	104.2	36.6	7.1	29.5	17.7	178.6	69.6	9.4	60.3	36.2
15	83.6	29.3	7.1	22.3	20.0	142.9	55.7	9.4	46.4	41.7
20	70.3	24.7	7.1	17.6	21.1	120.0	46.8	9.4	37.4	44.9
25	60.9	21.4	7.1	14.3	21.4	103.8	40.5	9.4	31.1	46.7
30	53.9	18.9	7.1	11.9	21.3	91.9	35.8	9.4	26.5	47.6
35	48.5	17.0	7.1	10.0	20.9	82.6	32.2	9.4	22.8	48.0
40	44.2	15.5	7.1	8.4	20.2	75.1	29.3	9.4	19.9	47.9
45	40.6	14.3	7.1	7.2	19.4	69.1	26.9	9.4	17.6	47.4
50	37.7	13.2	7.1	6.1	18.4	64.0	24.9	9.4	15.6	46.8
55	35.1	12.3	7.1	5.3	17.3	59.6	23.3	9.4	13.9	45.9
60	32.9	11.6	7.1	4.5	16.1	55.9	21.8	9.4	12.4	44.8
65	31.0	10.9	7.1	3.8	14.9	52.6	20.5	9.4	11.2	43.6
70	29.4	10.3	7.1	3.2	13.6	49.8	19.4	9.4	10.1	42.2
75	27.9	9.8	7.1	2.7	12.2	47.3	18.4	9.4	9.1	40.8
80	26.6	9.3	7.1	2.2	10.8	45.0	17.5	9.4	8.2	39.3
85	25.4	8.9	7.1	1.8	9.3	43.0	16.8	9.4	7.4	37.7
90	24.3	8.5	7.1	1.4	7.8	41.1	16.0	9.4	6.7	36.0
95	23.3	8.2	7.1	1.1	6.3	39.4	15.4	9.4	6.0	34.3
100	22.4	7.9	7.1	0.8	4.7	37.9	14.8	9.4	5.4	32.5
105	21.6	7.6	7.1	0.5	3.1	36.5	14.2	9.4	4.9	30.7
110	20.8	7.3	7.1	0.2	1.5	35.2	13.7	9.4	4.4	28.8

5-year Q_{roof}	**7.08**	**L/s**	**100-year Q_{roof}**	**9.36** **L/s**
5-year Max. Storage Required	**21.4**	**m^3**	**100-year Max. Storage Required**	**48.0** **m^3**
5-year Storage Depth	**0.078**	**m**	**100-year Storage Depth**	**0.103** **m**
5-year Estimated Drawdown Time	**1.00**	**hr**	**100-year Estimated Drawdown Time**	**1.78** **hr**

Iber Hazeldean Land Limited
5734-5754 Hazeldean Road/24 Iber Road
Proposed Site Conditions with Back Water

Building ID	**BLDG BB**	
Roof Area	0.041	ha
Avail Storage Area	0.039	
C	0.90	Rational Method runoff coefficient
t_c	10	min, tc at outlet without restriction

Note: Rational Method Coefficient "C" increased by 25% for 100-year calculations

Estimated Number of Roof Drains

Building Length	15.5	
Building Width	24.0	
Number of Drains	2	
m^2 / Drain	194.7	max 232.25m^2/notch as recommended by Zurn for Ottawa

Roof Top Rating Curve per Zurn Model Z-105-5

d (m)	A (m^2)	V_{acc} (m^3)	V_{avail} (m^3)	Q_{notch} (L/s)	Q_{roof} (L/s)	$V_{drawdown}$ (hr)
0.000	0	0.0	0.0	0.00	0.00	0.00
0.025	24.3	0.2	0.2	0.38	0.76	0.07
0.050	97.3	1.4	1.6	0.77	1.54	0.33
0.075	219.0	3.9	5.5	1.14	2.28	0.80
0.100	389.3	7.5	13.0	1.52	3.04	1.49
0.125	389.3	9.7	22.7	1.90	3.80	2.20
0.150	389.3	9.7	32.4	2.28	4.56	2.79

* Assumes one notch opening per drain, assumes maximum slope of 10cm

	5-year					100-year				
t_c (min)	i (mm/hr)	Q_{actual} (L/s)	$Q_{release}$ (L/s)	Q_{stored} (L/s)	V_{stored} (m^3)	i (mm/hr)	Q_{actual} (L/s)	$Q_{release}$ (L/s)	Q_{stored} (L/s)	V_{stored} (m^3)
10	104.2	10.7	2.3	8.4	5.0	178.6	20.3	3.1	17.3	10.4
15	83.6	8.6	2.3	6.2	5.6	142.9	16.3	3.1	13.2	11.9
20	70.3	7.2	2.3	4.9	5.9	120.0	13.7	3.1	10.6	12.7
25	60.9	6.2	2.3	3.9	5.9	103.8	11.8	3.1	8.8	13.1
30	53.9	5.5	2.3	3.2	5.8	91.9	10.5	3.1	7.4	13.3
35	48.5	5.0	2.3	2.7	5.6	82.6	9.4	3.1	6.3	13.3
40	44.2	4.5	2.3	2.2	5.3	75.1	8.6	3.1	5.5	13.2
45	40.6	4.2	2.3	1.8	5.0	69.1	7.9	3.1	4.8	12.9
50	37.7	3.9	2.3	1.5	4.6	64.0	7.3	3.1	4.2	12.6
55	35.1	3.6	2.3	1.3	4.2	59.6	6.8	3.1	3.7	12.3
60	32.9	3.4	2.3	1.1	3.8	55.9	6.4	3.1	3.3	11.9
65	31.0	3.2	2.3	0.9	3.4	52.6	6.0	3.1	2.9	11.4
70	29.4	3.0	2.3	0.7	2.9	49.8	5.7	3.1	2.6	10.9
75	27.9	2.9	2.3	0.5	2.4	47.3	5.4	3.1	2.3	10.4
80	26.6	2.7	2.3	0.4	1.9	45.0	5.1	3.1	2.1	9.9
85	25.4	2.6	2.3	0.3	1.4	43.0	4.9	3.1	1.8	9.3
90	24.3	2.5	2.3	0.2	0.9	41.1	4.7	3.1	1.6	8.7
95	23.3	2.4	2.3	0.1	0.4	39.4	4.5	3.1	1.4	8.1
100	22.4	2.3	2.3	0.0	0.0	37.9	4.3	3.1	1.2	7.5
105	21.6	2.2	2.2	0.0	0.0	36.5	4.2	3.1	1.1	6.9
110	20.8	2.1	2.1	0.0	0.0	35.2	4.0	3.1	0.9	6.2

5-year Q_{roof}	**2.32**	**L/s**	**100-year Q_{roof}**	**3.07**	**L/s**
5-year Max. Storage Required	**5.9**	**m^3**	**100-year Max. Storage Required**	**13.3**	**m^3**
5-year Storage Depth	**0.076**	**m**	**100-year Storage Depth**	**0.101**	**m**
5-year Estimated Drawdown Time	**0.84**	**hr**	**100-year Estimated Drawdown Time**	**1.51**	**hr**

Iber Hazeldean Land Limited
5734-5754 Hazeldean Road/24 Iber Road
Proposed Site Conditions with Back Water

Building ID	**BLDG C**	
Roof Area	0.288	ha
Avail Storage Area	0.274	
C	0.90	Rational Method runoff coefficient
t_c	10	min, tc at outlet without restriction

Note: Rational Method Coefficient "C" increased by 25% for 100-year calculations

Estimated Number of Roof Drains

Building Length	64.2	
Building Width	43.8	
Number of Drains	12	
m^2 / Drain	228.4	max 232.25m^2/notch as recommended by Zurn for Ottawa

Roof Top Rating Curve per Zurn Model Z-105-5

d	A	V_{acc}	V_{avail}	Q_{notch}	Q_{roof}	$V_{drawdown}$
(m)	(m^2)	(m^3)	(m^3)	(L/s)	(L/s)	(hr)
0.000	0	0.0	0.0	0.00	0.00	0.00
0.025	171.3	1.4	1.4	0.38	4.56	0.09
0.050	685.1	10.0	11.4	0.77	9.24	0.39
0.075	1541.4	27.1	38.5	1.14	13.68	0.94
0.100	2740.3	52.8	91.3	1.52	18.24	1.74
0.125	2740.3	68.5	159.9	1.90	22.80	2.58
0.150	2740.3	68.5	228.4	2.28	27.36	3.27

* Assumes one notch opening per drain, assumes maximum slope of 10cm

	5-year					100-year				
t_c	i	Q_{actual}	$Q_{release}$	Q_{stored}	V_{stored}	i	Q_{actual}	$Q_{release}$	Q_{stored}	V_{stored}
(min)	(mm/hr)	(L/s)	(L/s)	(L/s)	(m^3)	(mm/hr)	(L/s)	(L/s)	(L/s)	(m^3)
10	104.2	75.1	14.2	60.9	36.6	178.6	143.1	18.8	124.3	74.6
15	83.6	60.3	14.2	46.1	41.4	142.9	114.5	18.8	95.7	86.1
20	70.3	50.7	14.2	36.5	43.8	120.0	96.1	18.8	77.3	92.8
25	60.9	43.9	14.2	29.7	44.6	103.8	83.2	18.8	64.4	96.6
30	53.9	38.9	14.2	24.7	44.4	91.9	73.6	18.8	54.8	98.7
35	48.5	35.0	14.2	20.8	43.7	82.6	66.2	18.8	47.4	99.5
40	44.2	31.9	14.2	17.7	42.4	75.1	60.2	18.8	41.4	99.4
45	40.6	29.3	14.2	15.1	40.8	69.1	55.3	18.8	36.5	98.7
50	37.7	27.2	14.2	13.0	38.9	64.0	51.2	18.8	32.5	97.4
55	35.1	25.3	14.2	11.1	36.7	59.6	47.8	18.8	29.0	95.7
60	32.9	23.8	14.2	9.6	34.4	55.9	44.8	18.8	26.0	93.6
65	31.0	22.4	14.2	8.2	31.9	52.6	42.2	18.8	23.4	91.3
70	29.4	21.2	14.2	7.0	29.3	49.8	39.9	18.8	21.1	88.7
75	27.9	20.1	14.2	5.9	26.6	47.3	37.9	18.8	19.1	85.9
80	26.6	19.2	14.2	5.0	23.8	45.0	36.0	18.8	17.3	82.9
85	25.4	18.3	14.2	4.1	20.9	43.0	34.4	18.8	15.6	79.7
90	24.3	17.5	14.2	3.3	17.9	41.1	32.9	18.8	14.2	76.4
95	23.3	16.8	14.2	2.6	14.8	39.4	31.6	18.8	12.8	73.0
100	22.4	16.2	14.2	2.0	11.7	37.9	30.4	18.8	11.6	69.5
105	21.6	15.6	14.2	1.4	8.6	36.5	29.2	18.8	10.5	65.9
110	20.8	15.0	14.2	0.8	5.4	35.2	28.2	18.8	9.4	62.2

5-year Q_{roof}	**14.20**	**L/s**	**100-year Q_{roof}**	**18.78** **L/s**
5-year Max. Storage Required	**44.6**	**m^3**	**100-year Max. Storage Required**	**99.5** **m^3**
5-year Storage Depth	**0.078**	**m**	**100-year Storage Depth**	**0.103** **m**
5-year Estimated Drawdown Time	**1.03**	**hr**	**100-year Estimated Drawdown Time**	**1.84** **hr**

Iber Hazeldean Land Limited
5734-5754 Hazeldean Road/24 Iber Road
Proposed Site Conditions with Back Water

Building ID	**FUT. BLDG G**	
Roof Area	0.097	ha
Avail Storage Area	0.092	
C	0.90	Rational Method runoff coefficient
t_c	10	min, tc at outlet without restriction

Note: Rational Method Coefficient "C" increased by 25% for 100-year calculations

Estimated Number of Roof Drains

Building Length	20.2	
Building Width	53.1	
Number of Drains	5	
m^2 / Drain	184.4	max 232.25m^2/notch as recommended by Zurn for Ottawa

Roof Top Rating Curve per Zurn Model Z-105-5

d (m)	A (m^2)	V_{acc} (m^3)	V_{avail} (m^3)	Q_{notch} (L/s)	Q_{roof} (L/s)	$V_{drawdown}$ (hr)
0.000	0	0.0	0.0	0.00	0.00	0.00
0.025	57.6	0.5	0.5	0.38	1.90	0.07
0.050	230.4	3.4	3.8	0.77	3.85	0.31
0.075	518.5	9.1	13.0	1.14	5.70	0.76
0.100	921.8	17.8	30.7	1.52	7.60	1.41
0.125	921.8	23.0	53.8	1.90	9.50	2.08
0.150	921.8	23.0	76.8	2.28	11.40	2.64

* Assumes one notch opening per drain, assumes maximum slope of 10cm

	5-year					100-year				
t_c (min)	i (mm/hr)	Q_{actual} (L/s)	$Q_{release}$ (L/s)	Q_{stored} (L/s)	V_{stored} (m^3)	i (mm/hr)	Q_{actual} (L/s)	$Q_{release}$ (L/s)	Q_{stored} (L/s)	V_{stored} (m^3)
10	104.2	25.3	5.8	19.5	11.7	178.6	48.1	7.6	40.5	24.3
15	83.6	20.3	5.8	14.5	13.1	142.9	38.5	7.6	30.9	27.8
20	70.3	17.0	5.8	11.3	13.5	120.0	32.3	7.6	24.7	29.7
25	60.9	14.8	5.8	9.0	13.5	103.8	28.0	7.6	20.4	30.6
30	53.9	13.1	5.8	7.3	13.2	91.9	24.8	7.6	17.1	30.9
35	48.5	11.8	5.8	6.0	12.6	82.6	22.3	7.6	14.6	30.8
40	44.2	10.7	5.8	5.0	11.9	75.1	20.3	7.6	12.6	30.3
45	40.6	9.9	5.8	4.1	11.1	69.1	18.6	7.6	11.0	29.7
50	37.7	9.1	5.8	3.4	10.1	64.0	17.2	7.6	9.6	28.9
55	35.1	8.5	5.8	2.8	9.1	59.6	16.1	7.6	8.5	27.9
60	32.9	8.0	5.8	2.2	8.0	55.9	15.1	7.6	7.5	26.8
65	31.0	7.5	5.8	1.8	6.9	52.6	14.2	7.6	6.6	25.7
70	29.4	7.1	5.8	1.4	5.7	49.8	13.4	7.6	5.8	24.4
75	27.9	6.8	5.8	1.0	4.5	47.3	12.7	7.6	5.1	23.1
80	26.6	6.4	5.8	0.7	3.3	45.0	12.1	7.6	4.5	21.7
85	25.4	6.2	5.8	0.4	2.0	43.0	11.6	7.6	4.0	20.2
90	24.3	5.9	5.8	0.1	0.7	41.1	11.1	7.6	3.5	18.7
95	23.3	5.7	5.7	0.0	0.0	39.4	10.6	7.6	3.0	17.2
100	22.4	5.4	5.4	0.0	0.0	37.9	10.2	7.6	2.6	15.6
105	21.6	5.2	5.2	0.0	0.0	36.5	9.8	7.6	2.2	14.0
110	20.8	5.1	5.1	0.0	0.0	35.2	9.5	7.6	1.9	12.4

5-year Q_{roof}	**5.76 L/s**		**100-year Q_{roof}**	**7.61 L/s**
5-year Max. Storage Required	**13.5 m^3**		**100-year Max. Storage Required**	**30.9 m^3**
5-year Storage Depth	**0.076 m**		**100-year Storage Depth**	**0.100 m**
5-year Estimated Drawdown Time	**0.78 hr**		**100-year Estimated Drawdown Time**	**1.41 hr**

Estimated Post Development Peak Flow from Attenuated Areas

Area ID **A+ BLDG D**

Total Subsurface Storage (m^3) 374.9

Stage Attenuated Areas Storage Summary

		Surface Storage			Surface and Subsurface Storage							
	Stage	Ponding	h_o	delta d	V*	V_{acc}**	5-yr $Q_{release}$†	100-yr $Q_{release}$†	5-yr Elev.	100-yr Elev.	$h_{o\ eff}$ 5yr	$h_{o\ eff}$ 100yr
	(m)	(m^2)	(m)	(m)	(m^3)	(m^3)	(L/s)	(L/s)	(m)	(m)	(m)	(m)
Orifice INV	101.44	-	0.00			0.0	0.0	0.0	101.91	102.52	0.00	0.00
Cistern INV	101.99	-	0.55	0.55	187.5	187.5	0.0	0.0	101.91	102.52	0.00	0.00
Cistern OBV	102.63	-	1.19	0.64	187.5	374.9	152.0	0.0	101.91	102.52	0.72	0.00
T/L1	103.25	0.4	1.81	0.63	0.1	375.0	208.0	153.5	101.91	102.52	1.34	0.73
T/L2	103.30	137.6	1.86	0.05	2.4	377.4	211.9	158.7	101.91	102.52	1.39	0.78
T/L3	103.35	745.2	1.91	0.05	20.0	397.5	215.6	163.7	101.91	102.52	1.44	0.83
0.15m Ponding	103.40	1953.5	1.96	0.05	65.1	462.6	219.4	168.6	101.91	102.52	1.49	0.88
Max Ponding	103.55	8389.9	2.11	0.15	719.6	1182.2	230.1	182.4	101.91	102.52	1.64	1.03

* V=Incremental storage volume

Note: 5 and 100 year water elevations provided by JFSA

**V_{acc}=Total surface and sub-surface

† $Q_{release}$ = Release rate calculated from orifice equation accounting for backwater using the 5-year and 100-year waterlevels respectively

$$Q = C_d \times A \times \sqrt{2 \times g \times h_o}$$

Where Q = *Release rate (cms)*
C_d = *Discharge Coefficient (0.61)*
A = *Area of the orifice(m^2)*
g = *gravitational constant (9.81m/s^2)*
$h_{o\ eff}$ = *Effective head above the orifice due to waterlevel at outlet*

Orifice Location **STM101** **Dia** 291
Total Area 2.908 ha
C 0.82 Rational Method runoff coefficient *Note: Rational Method Coefficient "C" increased by 25% for 100-year calculations*

	5-year					100-year				
t_c (min)	i (mm/hr)	Q_{actual}‡ (L/s)	$Q_{release}$ (L/s)	Q_{stored} (L/s)	V_{stored} (m^3)	i (mm/hr)	Q_{actual}‡ (L/s)	$Q_{release}$ (L/s)	Q_{stored} (L/s)	V_{stored} (m^3)
5	141.2	971.3	191.7	779.7	233.9	242.7	2013.5	182.0	1831.5	549.4
10	104.2	727.3	191.7	535.7	321.4	178.6	1495.3	182.0	1313.3	788.0
15	83.6	591.2	191.7	399.5	359.6	142.9	1207.1	182.0	1025.1	922.6
20	70.3	503.4	191.7	311.7	374.1	120.0	1021.8	182.0	839.8	1007.7
25	60.9	441.6	191.7	250.0	375.0	103.8	891.7	182.0	709.7	1064.5
30	53.9	395.7	191.7	204.0	367.2	91.9	794.9	182.0	612.9	1103.2
35	48.5	360.0	191.7	168.3	353.5	82.6	719.8	182.0	537.8	1129.4
40	44.2	331.4	191.7	139.7	335.3	75.1	659.8	182.0	477.8	1146.6
45	40.6	307.9	191.7	116.3	313.9	69.1	610.5	182.0	428.5	1157.0
50	37.7	288.3	191.7	96.6	289.9	64.0	569.4	182.0	387.4	1162.1
55	35.1	271.6	191.7	79.9	263.8	59.6	534.4	182.0	352.4	1162.8
60	32.9	257.2	191.7	65.6	236.0	55.9	504.2	182.0	322.2	1160.1
65	31.0	244.7	191.7	53.0	206.8	52.6	478.0	182.0	296.0	1154.4
70	29.4	233.6	191.7	42.0	176.3	49.8	454.9	182.0	272.9	1146.3
75	27.9	223.9	191.7	32.2	144.9	47.3	434.5	182.0	252.4	1136.0
80	26.6	215.1	191.7	23.4	112.5	45.0	416.2	182.0	234.1	1123.9
85	25.4	207.2	191.7	15.6	79.4	43.0	399.7	182.0	217.7	1110.2
90	24.3	200.1	191.7	8.4	45.6	41.1	384.8	182.0	202.8	1095.1
95	23.3	193.6	191.7	2.0	11.2	39.4	371.3	182.0	189.3	1078.8
100	22.4	187.7	187.7	0.0	0.0	37.9	358.9	182.0	176.9	1061.3
105	21.6	182.2	182.2	0.0	0.0	36.5	347.5	182.0	165.5	1042.8

‡ Includes controlled flow from BLDG A-G

5-year $Q_{attenuated}$ **191.65 L/s**
5-year Max. Storage Required **375.0 m^3**
Est. 5-year Storage Elevation **103.07 m**

100-year $Q_{attenuated}$ **182.01 L/s**
100-year Max. Storage Required **1162.8 m^3**
Est. 100-year Storage Elevation **103.55 m**

Summary of Release Rates and Storage Volumes

Control Area	5-Year Release Rate (L/s)	5-Year Required Storage (m^3)	100-Year Release Rate (L/s)	100-Year Required Storage (m^3)	100-Year Available Storage (m^3)
U1	37.3	0.0	79.7	0.0	0.0
U2	10.6	0.0	22.7	0.0	0.0
U3	3.2	0.0	6.1	0.0	0.0
A1	191.7	375.0	182.0	1162.8	1182.2
Total	**242.8**	**375.0**	**290.5**	**1162.8**	**1182.2**

** Note Attenuated Areas includes constant controlled flow from BLDG A-G*

Stormwater - Proposed Development
City of Ottawa Sewer Design Guidelines, 2012

Target Flow Rate

Site Area 4.44 ha
C 0.74 Rational Method runoff coefficient

Estimated Post Development Peak Flow from Unattenuated Areas

Area ID U1
Total Area 0.679 ha
C 0.24 Rational Method runoff coefficient

	2-year				
t_c (min)	i (mm/hr)	Q_{actual} (L/s)	$Q_{release}$ (L/s)	Q_{stored} (L/s)	V_{stored} (m^3)
15.1	61.5	27.6	27.6	0.0	0.0

Area ID U2
Total Area 0.079 ha
C 0.59 Rational Method runoff coefficient

	2-year				
t_c (min)	i (mm/hr)	Q_{actual} (L/s)	$Q_{release}$ (L/s)	Q_{stored} (L/s)	V_{stored} (m^3)
15.1	61.5	7.9	7.9	0.0	0.0

Area ID U3
Total Area 0.015 ha
C 0.90 Rational Method runoff coefficient

	2-year				
t_c (min)	i (mm/hr)	Q_{actual} (L/s)	$Q_{release}$ (L/s)	Q_{stored} (L/s)	V_{stored} (m^3)
15.1	61.5	2.4	2.4	0.0	0.0

Iber Hazeldean Land Limited
5734-5754 Hazeldean Road/24 Iber Road
Proposed Site Conditions - 2 Year Storm Event

Estimated Post Development Storage Requirement

Building ID	**BLDG A**	
Roof Area	0.190	ha
Avail Storage Area	0.180	
C	0.90	Rational Method runoff coefficient
t_c	10	min, tc at outlet without restriction

Estimated Number of Roof Drains

Building Length	86.6	
Building Width	22.3	
Number of Drains	9	
m^2 / Drain	200.1	max 232.25m^2/notch as recommended by Zurn for Ottawa

Roof Top Rating Curve per Zurn Model Z-105-5

d (m)	A (m^2)	V_{acc} (m^3)	V_{avail} (m^3)	Q_{notch} (L/s)	Q_{roof} (L/s)	$V_{drawdown}$ (hr)
0.000	0	0.0	0.0	0.00	0.00	0.00
0.025	112.6	0.9	0.9	0.38	3.42	0.08
0.050	450.3	6.6	7.5	0.77	6.93	0.34
0.075	1013.1	17.8	25.3	1.14	10.26	0.82
0.100	1801.0	34.7	60.0	1.52	13.68	1.53
0.125	1801.0	45.0	105.1	1.90	17.10	2.26
0.150	1801.0	45.0	150.1	2.28	20.52	2.87

* Assumes one notch opening per drain, assumes maximum slope of 10cm

	2-year				
t_c (min)	i (mm/hr)	Q_{actual} (L/s)	$Q_{release}$ (L/s)	Q_{stored} (L/s)	V_{stored} (m^3)
5	103.6	49.1	9.0	40.1	12.0
10	76.8	36.4	9.0	27.4	16.4
15	61.8	29.3	9.0	20.2	18.2
20	52.0	24.7	9.0	15.6	18.8
25	45.2	21.4	9.0	12.4	18.6
30	40.0	19.0	9.0	9.9	17.9
35	36.1	17.1	9.0	8.1	16.9
40	32.9	15.6	9.0	6.5	15.7
45	30.2	14.3	9.0	5.3	14.3
50	28.0	13.3	9.0	4.3	12.8
55	26.2	12.4	9.0	3.4	11.1
60	24.6	11.6	9.0	2.6	9.4
65	23.2	11.0	9.0	1.9	7.6
70	21.9	10.4	9.0	1.4	5.7
75	20.8	9.9	9.0	0.8	3.7
80	19.8	9.4	9.0	0.4	1.8
85	18.9	9.0	9.0	0.0	0.0
90	18.1	8.6	8.6	0.0	0.0
95	17.4	8.3	8.3	0.0	0.0
100	16.7	7.9	7.9	0.0	0.0
105	16.1	7.6	7.6	0.0	0.0

2-year Q_{roof}	**9.03**	**L/s**
2-year Max. Storage Required	**18.8**	**m^3**
2-year Storage Depth	**0.066**	**m**
2-year Estimated Drawdown Time	**0.64**	**hr**

Iber Hazeldean Land Limited
5734-5754 Hazeldean Road/24 Iber Road
Proposed Site Conditions - 2 Year Storm Event

Building ID	**BLDG B**	
Roof Area	0.140	ha
Avail Storage Area	0.133	
C	0.90	Rational Method runoff coefficient
t_c	10	min, tc at outlet without restriction

Estimated Number of Roof Drains

Building Length	58.0	
Building Width	24.0	
Number of Drains	6	
m^2 / Drain	222.3	max 232.25m^2/notch as recommended by Zurn for Ottawa

Roof Top Rating Curve per Zurn Model Z-105-5

d (m)	A (m^2)	V_{acc} (m^3)	V_{avail} (m^3)	Q_{notch} (L/s)	Q_{roof} (L/s)	$V_{drawdown}$ (hr)
0.000	0	0.0	0.0	0.00	0.00	0.00
0.025	83.4	0.7	0.7	0.38	2.28	0.08
0.050	333.5	4.9	5.6	0.77	4.62	0.38
0.075	750.3	13.2	18.8	1.14	6.84	0.91
0.100	1333.9	25.7	44.5	1.52	9.12	1.70
0.125	1333.9	33.3	77.8	1.90	11.40	2.51
0.150	1333.9	33.3	111.2	2.28	13.68	3.19

* Assumes one notch opening per drain, assumes maximum slope of 10cm

	2-year				
t_c (min)	i (mm/hr)	Q_{actual} (L/s)	$Q_{release}$ (L/s)	Q_{stored} (L/s)	V_{stored} (m^3)
5	103.6	36.4	6.1	30.2	9.1
10	76.8	27.0	6.1	20.8	12.5
15	61.8	21.7	6.1	15.5	14.0
20	52.0	18.3	6.1	12.1	14.6
25	45.2	15.9	6.1	9.7	14.6
30	40.0	14.1	6.1	7.9	14.3
35	36.1	12.7	6.1	6.5	13.7
40	32.9	11.5	6.1	5.4	13.0
45	30.2	10.6	6.1	4.5	12.1
50	28.0	9.8	6.1	3.7	11.1
55	26.2	9.2	6.1	3.0	10.1
60	24.6	8.6	6.1	2.5	8.9
65	23.2	8.1	6.1	2.0	7.8
70	21.9	7.7	6.1	1.6	6.5
75	20.8	7.3	6.1	1.2	5.3
80	19.8	7.0	6.1	0.8	4.0
85	18.9	6.7	6.1	0.5	2.6
90	18.1	6.4	6.1	0.2	1.3
95	17.4	6.1	6.1	0.0	0.0
100	16.7	5.9	5.9	0.0	0.0
105	16.1	5.7	5.7	0.0	0.0

2-year Q_{roof}	**6.14**	**L/s**
2-year Max. Storage Required	**14.6**	**m^3**
2-year Storage Depth	**0.067**	**m**
2-year Estimated Drawdown Time	**0.74**	**hr**

Iber Hazeldean Land Limited
5734-5754 Hazeldean Road/24 Iber Road
Proposed Site Conditions - 2 Year Storm Event

Building ID	**BLDG BB**	
Roof Area	0.041	ha
Avail Storage Area	0.039	
C	0.90	Rational Method runoff coefficient
t_c	10	min, tc at outlet without restriction

Estimated Number of Roof Drains

Building Length	15.5	
Building Width	24.0	
Number of Drains	2	
m^2 / Drain	194.7	max 232.25m^2/notch as recommended by Zurn for Ottawa

Roof Top Rating Curve per Zurn Model Z-105-5

d (m)	A (m^2)	V_{acc} (m^3)	V_{avail} (m^3)	Q_{notch} (L/s)	Q_{roof} (L/s)	$V_{drawdown}$ (hr)
0.000	0	0.0	0.0	0.00	0.00	0.00
0.025	24.3	0.2	0.2	0.38	0.76	0.07
0.050	97.3	1.4	1.6	0.77	1.54	0.33
0.075	219.0	3.9	5.5	1.14	2.28	0.80
0.100	389.3	7.5	13.0	1.52	3.04	1.49
0.125	389.3	9.7	22.7	1.90	3.80	2.20
0.150	389.3	9.7	32.4	2.28	4.56	2.79

* Assumes one notch opening per drain, assumes maximum slope of 10cm

	2-year				
t_c (min)	i (mm/hr)	Q_{actual} (L/s)	$Q_{release}$ (L/s)	Q_{stored} (L/s)	V_{stored} (m^3)
5	103.6	10.6	2.0	8.6	2.6
10	76.8	7.9	2.0	5.9	3.5
15	61.8	6.3	2.0	4.3	3.9
20	52.0	5.3	2.0	3.3	4.0
25	45.2	4.6	2.0	2.6	3.9
30	40.0	4.1	2.0	2.1	3.8
35	36.1	3.7	2.0	1.7	3.6
40	32.9	3.4	2.0	1.4	3.3
45	30.2	3.1	2.0	1.1	3.0
50	28.0	2.9	2.0	0.9	2.6
55	26.2	2.7	2.0	0.7	2.3
60	24.6	2.5	2.0	0.5	1.9
65	23.2	2.4	2.0	0.4	1.5
70	21.9	2.2	2.0	0.2	1.0
75	20.8	2.1	2.0	0.1	0.6
80	19.8	2.0	2.0	0.0	0.2
85	18.9	1.9	1.9	0.0	0.0
90	18.1	1.9	1.9	0.0	0.0
95	17.4	1.8	1.8	0.0	0.0
100	16.7	1.7	1.7	0.0	0.0
105	16.1	1.7	1.7	0.0	0.0

2-year Q_{roof}	**2.00**	**L/s**
2-year Max. Storage Required	**4.0**	**m^3**
2-year Storage Depth	**0.065**	**m**
2-year Estimated Drawdown Time	**0.62**	**hr**

Iber Hazeldean Land Limited
5734-5754 Hazeldean Road/24 Iber Road
Proposed Site Conditions - 2 Year Storm Event

Building ID	**BLDG C**	
Roof Area	0.288	ha
Avail Storage Area	0.274	
C	0.90	Rational Method runoff coefficient
t_c	10	min, tc at outlet without restriction

Estimated Number of Roof Drains

Building Length	64.2	
Building Width	43.8	
Number of Drains	12	
m^2 / Drain	228.4	max 232.25m^2/notch as recommended by Zurn for Ottawa

Roof Top Rating Curve per Zurn Model Z-105-5

d (m)	A (m^2)	V_{acc} (m^3)	V_{avail} (m^3)	Q_{notch} (L/s)	Q_{roof} (L/s)	$V_{drawdown}$ (hr)
0.000	0	0.0	0.0	0.00	0.00	0.00
0.025	171.3	1.4	1.4	0.38	4.56	0.09
0.050	685.1	10.0	11.4	0.77	9.24	0.39
0.075	1541.4	27.1	38.5	1.14	13.68	0.94
0.100	2740.3	52.8	91.3	1.52	18.24	1.74
0.125	2740.3	68.5	159.9	1.90	22.80	2.58
0.150	2740.3	68.5	228.4	2.28	27.36	3.27

* Assumes one notch opening per drain, assumes maximum slope of 10cm

	2-year				
t_c (min)	i (mm/hr)	Q_{actual} (L/s)	$Q_{release}$ (L/s)	Q_{stored} (L/s)	V_{stored} (m^3)
5	103.6	74.7	12.3	62.3	18.7
10	76.8	55.4	12.3	43.0	25.8
15	61.8	44.5	12.3	32.2	29.0
20	52.0	37.5	12.3	25.2	30.2
25	45.2	32.6	12.3	20.2	30.3
30	40.0	28.9	12.3	16.5	29.8
35	36.1	26.0	12.3	13.7	28.7
40	32.9	23.7	12.3	11.4	27.3
45	30.2	21.8	12.3	9.5	25.6
50	28.0	20.2	12.3	7.9	23.6
55	26.2	18.9	12.3	6.5	21.6
60	24.6	17.7	12.3	5.4	19.3
65	23.2	16.7	12.3	4.4	17.0
70	21.9	15.8	12.3	3.5	14.5
75	20.8	15.0	12.3	2.7	12.0
80	19.8	14.3	12.3	2.0	9.4
85	18.9	13.7	12.3	1.3	6.7
90	18.1	13.1	12.3	0.7	4.0
95	17.4	12.6	12.3	0.2	1.2
100	16.7	12.1	12.1	0.0	0.0
105	16.1	11.6	11.6	0.0	0.0

2-year Q_{roof}	**12.34**	**L/s**
2-year Max. Storage Required	**30.3**	**m^3**
2-year Storage Depth	**0.067**	**m**
2-year Estimated Drawdown Time	**0.77**	**hr**

Iber Hazeldean Land Limited
5734-5754 Hazeldean Road/24 Iber Road
Proposed Site Conditions - 2 Year Storm Event

Building ID	UT. BLDG G	
Roof Area	0.097	ha
Avail Storage Area	0.092	
C	0.90	Rational Method runoff coefficient
t_c	10	min, tc at outlet without restriction

Estimated Number of Roof Drains

Building Length	20.2	
Building Width	53.1	
Number of Drains	5	
m^2 / Drain	184.4	max 232.25m^2/notch as recommended by Zurn for Ottawa

Roof Top Rating Curve per Zurn Model Z-105-5

d (m)	A (m^2)	V_{acc} (m^3)	V_{avail} (m^3)	Q_{notch} (L/s)	Q_{roof} (L/s)	$V_{drawdown}$ (hr)
0.000	0	0.0	0.0	0.00	0.00	0.00
0.025	57.6	0.5	0.5	0.38	1.90	0.07
0.050	230.4	3.4	3.8	0.77	3.85	0.31
0.075	518.5	9.1	13.0	1.14	5.70	0.76
0.100	921.8	17.8	30.7	1.52	7.60	1.41
0.125	921.8	23.0	53.8	1.90	9.50	2.08
0.150	921.8	23.0	76.8	2.28	11.40	2.64

* Assumes one notch opening per drain, assumes maximum slope of 10cm

	2-year				
t_c (min)	i (mm/hr)	Q_{actual} (L/s)	$Q_{release}$ (L/s)	Q_{stored} (L/s)	V_{stored} (m^3)
5	103.6	25.1	4.9	20.2	6.1
10	76.8	18.6	4.9	13.7	8.2
15	61.8	15.0	4.9	10.0	9.0
20	52.0	12.6	4.9	7.7	9.2
25	45.2	11.0	4.9	6.0	9.0
30	40.0	9.7	4.9	4.8	8.6
35	36.1	8.7	4.9	3.8	8.0
40	32.9	8.0	4.9	3.0	7.3
45	30.2	7.3	4.9	2.4	6.5
50	28.0	6.8	4.9	1.9	5.6
55	26.2	6.3	4.9	1.4	4.6
60	24.6	6.0	4.9	1.0	3.7
65	23.2	5.6	4.9	0.7	2.6
70	21.9	5.3	4.9	0.4	1.6
75	20.8	5.0	4.9	0.1	0.5
80	19.8	4.8	4.8	0.0	0.0
85	18.9	4.6	4.6	0.0	0.0
90	18.1	4.4	4.4	0.0	0.0
95	17.4	4.2	4.2	0.0	0.0
100	16.7	4.1	4.1	0.0	0.0
105	16.1	3.9	3.9	0.0	0.0

2-year Q_{roof}	**4.94**	**L/s**
2-year Max. Storage Required	**9.2**	**m^3**
2-year Storage Depth	**0.065**	**m**
2-year Estimated Drawdown Time	**0.57**	**hr**

Estimated Post Development Peak Flow from Attenuated Areas

Area ID A+BLDG D

Maintenance Structures

ID	STM100	STM101A	STM101B	STM102	STM103	STM104	STM105	STM106	STM107
Structure dia (mm)	1500	1500	1500	1200	1200	1800	1200	1200	1200
T/L*	102.85	103.55	103.55	103.55	103.55	103.55	103.55	103.55	103.55
INV	101.16	101.44	101.51	101.78	101.71	101.61	101.70	101.76	101.81
Depth	1.69	2.11	2.04	1.77	1.84	1.94	1.85	1.79	1.94
$V_{structure}$ (m^3)	3.0	3.7	3.6	2.0	2.1	4.9	2.1	2.0	2.2

ID	CBMH108	CBMH109	CBMH110	STM111	STM112	STM113	STM113A	CBMH114	CBMH37
Structure dia (mm)	1200	1200	1200	1200	1200	1200	1200	1200	1200
T/L*	103.30	103.30	103.30	103.54	103.50	103.55	103.55	103.55	103.55
INV	101.88	101.82	101.78	101.86	101.98	101.89	101.79	102.22	102.33
Depth	1.42	1.48	1.52	1.68	1.52	1.66	1.76	1.33	1.22
$V_{structure}$ (m^3)	1.6	1.7	1.7	1.9	1.7	1.9	2.0	1.5	1.4

ID	CICB1	CICB2	CB3	CBMH4	CB5	CICB6	CICB7	CICB9	CICB10
Structure dia (mm)	600	600	600	1200	600	600	600	600	600
T/L*	103.53	103.53	103.45	103.25	103.47	103.44	103.44	103.55	103.55
INV	102.03	102.03	101.95	102.01	101.97	101.94	101.94	102.21	102.21
Depth	1.50	1.50	1.50	1.24	1.50	1.50	1.50	1.34	1.34
$V_{structure}$ (m^3)	0.4	0.5	0.5	1.4	0.5	0.5	0.5	0.5	0.5

ID	CICB11	CICB12	CB13	CB14	CB15	CB16	CB17	CB18	CB19
Structure dia (mm)	600	600	600	600	600	600	600	600	600
T/L*	103.50	103.50	103.40	103.40	103.25	103.40	103.25	103.40	103.25
INV	102.05	102.05	102.08	102.12	102.19	102.16	102.23	102.21	102.28
Depth	1.45	1.45	1.32	1.28	1.06	1.24	1.02	1.19	0.97
$V_{structure}$ (m^3)	0.5	0.5	0.5	0.5	0.5	0.5	0.5	0.5	0.4

ID	CB20	CB21	CB22	CB23	CB24	CB25	CB26	CB27	CB28
Structure dia (mm)	600	600	600	600	600	600	600	600	600
T/L*	103.25	103.40	103.40	103.05	103.55	103.30	103.30	103.30	103.30
INV	102.00	102.17	102.20	102.24	102.19	102.06	102.03	102.06	101.91
Depth	1.25	1.23	1.20	0.81	1.36	1.24	1.27	1.24	1.39
$V_{structure}$ (m^3)	0.5	0.5	0.5	0.4	0.5	0.5	0.5	0.5	0.5

ID	CB29	CB30	CICB31	CICB32	CICB33	CICB34	CICB35	CICB36
Structure dia (mm)	600	600	600	600	600	600	600	600
T/L*	103.30	103.30	103.40	103.40	103.55	103.55	103.55	103.55
INV	101.98	102.16	101.90	101.90	102.45	102.45	102.65	102.65
Depth	1.32	1.14	1.50	1.50	1.10	1.10	0.90	0.90
$V_{structure}$ (m^3)	0.5	0.5	0.5	0.5	0.4	0.4	0.3	0.3

Sewers

ID	200mm	250mm	300mm	375mm	450mm	525mm	600mm	675mm	825mm
Storage Pipe Dia (mm)	200	250	300	375	450	525	600	675	825
L (m)	163.8	219.9	118	109	141.5	46.2	88.8	27.9	0
V_{sewer} (m^3)	5.1	10.8	8.3	12.0	22.5	10.0	25.1	10.0	0.0

*Top of lid or max ponding elevation (103.55)

ID	900mm	UG Storage
Storage Pipe Dia (mm)	900	0
L (m)	86.4	0
V_{sewer} (m^3)	55.0	157.0

*Top of lid or max ponding elevation (103.55)

Total U/G Storage (m^3)	157.0
Total Structure Storage (m^3)	217.9
Total Subsurface Storage (m^3)	374.9

5734-5754 Hazeldean Road/24 Iber Road
Proposed Site Conditions - 2 Year Storm Event

Stage Attenuated Areas Storage Summary

		Surface Storage			Surface and Subsurface Storage							
	Stage	Ponding	h_o	delta d	V*	V_{acc}**	2-yr $Q_{release}$†	100-yr $Q_{release}$†	2-yr Elev.	100-yr Elev.	$h_{o\ eff\ 2}$yr	$h_{o\ eff}$ 100yr
	(m)	(m^2)	(m)	(m)	(m^3)	(m^3)	(L/s)	(L/s)	(m)	(m)	(m)	(m)
Orifice INV	101.44	-	0.00			0.0	0.0	0.0	101.91	102.52	0.00	0.00
Cistern INV	101.99	-	0.55	0.55	187.5	187.5	0.0	0.0	101.91	102.52	0.00	0.00
Cistern OBV	102.63	-	1.19	0.64	187.5	374.9	152.0	0.0	101.91	102.52	0.72	0.00
T/L1	103.25	0.4	1.81	0.63	0.1	375.0	208.0	153.5	101.91	102.52	1.34	0.73
T/L2	103.30	137.6	1.86	0.05	2.4	377.4	211.9	158.7	101.91	102.52	1.39	0.78
T/L3	103.35	745.2	1.91	0.05	20.0	397.5	215.6	163.7	101.91	102.52	1.44	0.83
0.15m Ponding	103.40	1953.5	1.96	0.05	65.1	462.6	219.4	168.6	101.91	102.52	1.49	0.88
Max Ponding	103.55	8389.9	2.11	0.15	719.6	1182.2	230.1	182.4	101.91	102.52	1.64	1.03

* V=Incremental storage volume
**V_{acc}=Total surface and sub-surface
† $Q_{release}$ = Release rate calculated from orifice equation accounting for backwater using the 5-year and 100-year waterlevels respectively

$$Q = C_d \times A \times \sqrt{2 \times g \times h_o}$$

Where Q = *Release rate (cms)*
C_d =*Discharge Coefficient (0.61)*
A= *Area of the orifice(m^2)*
g =*gravitational constant (9.81m/s^2)*
$h_{o\ eff}$ =*Effective head above the orifice due to waterlevel at outlet*

Orifice Location **STM101** **Dia** 291
Total Area 2.908 ha
C 0.82 Rational Method runoff coefficient

	2-year				
t_c (min)	i (mm/hr)	Q_{actual}‡ (L/s)	$Q_{release}$ (L/s)	Q_{stored} (L/s)	V_{stored}‡‡ (m^3)
5	103.6	717.8	115.4	602.4	180.7
10	76.8	541.2	115.4	425.8	255.5
15	61.8	442.0	115.4	326.6	293.9
20	52.0	377.8	115.4	262.3	314.8
25	45.2	332.5	115.4	217.0	325.6
30	40.0	298.7	115.4	183.2	329.8
35	36.1	272.4	115.4	157.0	329.6
40	32.9	251.3	115.4	135.9	326.1
45	30.2	234.0	115.4	118.6	320.1
50	28.0	219.5	115.4	104.1	312.2
55	26.2	207.1	115.4	91.7	302.6
60	24.6	196.5	115.4	81.1	291.8
65	23.2	187.2	115.4	71.8	280.0
70	21.9	179.0	115.4	63.6	267.2
75	20.8	171.8	115.4	56.4	253.6
80	19.8	165.3	115.4	49.9	239.4
85	18.9	159.4	115.4	44.0	224.6
90	18.1	154.2	115.4	38.7	209.2
95	17.4	149.3	115.4	33.9	193.4
100	16.7	144.9	115.4	29.5	177.2
105	16.1	140.9	115.4	25.5	160.6

‡ Includes controlled flow from BLDG A-G
‡‡ Does not Incude maintenance structure or sewer storage

2-year $Q_{attenuated}$ **115.41 L/s**
2-year Max. Storage Required **330 m^3**
Est. 2-year Storage Elevation **102.47 m**

Iber Hazeldean Land Limited
5734-5754 Hazeldean Road/24 Iber Road
Storm Sewer Calculation Sheet

										Sewer Data								
Area ID	Up	Down	Area	C	Indiv AxC	Acc AxC	T_C	I	Q_{TOTAL}	DIA	Slope	Length	$A_{hydraulic}$	R	Velocity	Qcap	Time Flow	Q / Q full
			(ha)	(-)			(min)	(mm/hr)	(L/s)	(mm)	(%)	(m)	(m^2)	(m)	(m/s)	(L/s)	(min)	(-)
	BLDG A	STM113	0.190	0.90	0.17	0.17	10.0	104.2	1.5	250	1.00	7.9	0.049	0.063	1.21	59.5	0.1	0.03
							10.1											
A32	CBMH37	CBMH114	0.062	0.55	0.03	0.03	10.1	103.6	9.8	250	0.47	21.9	0.049	0.063	0.83	40.8	0.4	0.24
A31	CBMH114	STM113	0.046	0.85	0.04	0.07	10.5	101.4	20.6	250	0.44	22.7	0.049	0.063	0.80	39.4	0.5	0.52
							11.0											
	BLDG C	STM113	0.288	0.90	0.26	0.26	10.0	104.2	14.2	300	1.00	2.6	0.071	0.075	1.37	96.7	0.0	0.15
							10.0											
A30	CICB35/36	STM113	0.055	0.75	0.04	0.04	10.0	104.2	11.9	200	1.00	6	0.031	0.050	1.04	32.8	0.1	0.36
							10.1											
	STM113	STM113A			0.00	0.28	11.0	99.1	94.1	450	0.25	37.2	0.159	0.113	0.90	142.6	0.7	0.66
							11.7											
A29	CICB33/34	STM113A	0.042	0.85	0.04	0.04	10.0	104.2	10.2	200	1.00	5.9	0.031	0.050	1.04	32.8	0.1	0.31
							10.1											
A28	CICB31/32	STM113A	0.091	0.83	0.08	0.08	10.0	104.2	21.8	200	1.00	5.9	0.031	0.050	1.04	32.8	0.1	0.66
							10.1											
	STM113A	STM104			0.00	0.40	11.7	95.9	121.1	450	0.25	70	0.159	0.113	0.90	142.6	1.3	0.85
							13.0											
A19	CB25	CBMH108	0.251	0.80	0.20	0.20	10.0	104.2	58.5	300	1.00	17.3	0.071	0.075	1.37	96.7	0.2	0.60
A20	CBMH108	STM107	0.111	0.81	0.09	0.29	10.2	103.1	83.5	450	0.29	14	0.159	0.113	0.97	153.5	0.2	0.54
							10.5											
A18	CB24	STM107	0.020	0.24	0.00	0.00	10.0	104.2	1.4	200	1.00	31.7	0.031	0.050	1.04	32.8	0.5	0.04
							10.5											
	BLDG B	STM107	0.140	0.90	0.13	0.13	10.0	104.2	7.1	250	1.00	3.7	0.049	0.063	1.21	59.5	0.1	0.12
							10.1											
	STM107	STM106			0.00	0.30	10.5	101.6	90.7	450	0.25	20.3	0.159	0.113	0.90	142.6	0.4	0.64
							10.9											
A22	CB27	CB26	0.055	0.86	0.05	0.05	10.0	104.2	13.6	200	1.00	3.1	0.031	0.050	1.04	32.8	0.0	0.42
A21	CB26	CBMH109	0.073	0.87	0.06	0.11	10.0	103.9	31.9	250	1.00	19.9	0.049	0.063	1.21	59.5	0.3	0.54
							10.3											
A24	CB28	CBMH109	0.028	0.84	0.02	0.02	10.0	104.2	6.8	200	1.00	3	0.031	0.050	1.04	32.8	0.0	0.21
							10.0											
A24	CBMH109	STM106	0.028	0.84	0.02	0.16	10.3	102.5	44.9	375	0.26	11.4	0.110	0.094	0.81	89.4	0.2	0.50
							10.6											
	STM106	STM105			0.00	0.45	10.9	99.7	132.9	525	0.26	19.2	0.216	0.131	1.01	219.3	0.3	0.61
							11.2											
A25	CB29	CBMH110	0.166	0.80	0.13	0.13	10.0	104.2	38.5	250	1.00	17.3	0.049	0.063	1.21	59.5	0.2	0.65
A26	CBMH110	STM105	0.052	0.86	0.05	0.18	10.2	103.0	51.0	375	0.36	14	0.110	0.094	0.95	105.2	0.2	0.48
							10.5											
	BLDG BB	STM105	0.041	0.90	0.04	0.04	10.0	104.2	2.3	250	1.00	3.7	0.049	0.063	1.21	59.5	0.1	0.04
							10.1											
A27	CB30	STM105	0.025	0.70	0.02	0.02	10.0	104.2	5.1	200	1.00	12.3	0.031	0.050	1.04	32.8	0.2	0.16
							10.2											
	STM105	STM104			0.00	0.65	11.2	98.3	186.8	525	0.22	27	0.216	0.131	0.93	201.7	0.5	0.93
							11.7											
A17	CB23	STM112	0.070	0.90	0.06	0.06	10.0	104.2	18.3	250	0.44	54.2	0.049	0.063	0.80	39.4	1.1	0.46
							11.1											
A16	CB22	STM112	0.074	0.75	0.06	0.06	10.0	104.2	16.1	250	1.00	5.7	0.049	0.063	1.21	59.5	0.1	0.27
							10.1											
A15	CB21	STM112	0.052	0.80	0.04	0.04	10.0	104.2	12.0	250	1.00	5.7	0.049	0.063	1.21	59.5	0.1	0.20
							10.1											
	STM112	STM111			0.00	0.16	11.1	98.6	43.9	375	0.25	36.3	0.110	0.094	0.79	87.7	0.8	0.50
							11.9											

A14	CB20	STM111	0.136	0.77	0.11	0.11	10.0	104.2	30.4	200	1.00	11.6	0.031	0.050	1.04	32.8	0.2	0.93
							10.2											
A13	CB19	STM111	0.125	0.84	0.10	0.10	10.0	104.2	30.3	200	1.00	19.4	0.031	0.050	1.04	32.8	0.3	0.92
							10.3											
A12	CB18	STM111	0.141	0.88	0.12	0.12	10.0	104.2	35.8	250	1.00	12.2	0.049	0.063	1.21	59.5	0.2	0.60
							10.2											
A11	CB17	STM111	0.071	0.85	0.06	0.06	10.0	104.2	17.5	200	1.00	19.4	0.031	0.050	1.04	32.8	0.3	0.53
							10.3											
A10	CB16	STM111	0.116	0.87	0.10	0.10	10.0	104.2	29.2	250	1.00	12.2	0.049	0.063	1.21	59.5	0.2	0.49
							10.2											
A9	CB15	STM111	0.128	0.86	0.11	0.11	10.0	104.2	31.8	200	1.00	19.3	0.031	0.050	1.04	32.8	0.3	0.97
							10.3											
A8	CB14	STM111	0.121	0.87	0.11	0.11	10.0	104.2	30.5	250	1.00	12.2	0.049	0.063	1.21	59.5	0.2	0.51
							10.2											
A7	CB13	STM111	0.058	0.81	0.05	0.05	10.0	104.2	13.7	250	1.00	12.3	0.049	0.063	1.21	59.5	0.2	0.23
							10.2											
	STM111	STM104			0.00	0.92	11.9	95.2	242.6	600	0.25	88.8	0.283	0.150	1.09	307.0	1.4	0.79
							13.2											
A6	CICB11/12	STM104	0.039	0.81	0.03	0.03	10.0	104.2	9.1	200	1.00	5.8	0.031	0.050	1.04	32.8	0.1	0.28
							10.1											
	STM104	STM101B			0.00	1.99	13.2	89.7	521.9	900	0.13	39.9	0.636	0.225	1.03	652.7	0.6	0.80
							13.9											
A5	CICB9/10	STM102	0.072	0.73	0.05	0.05	10.0	104.2	15.2	200	1.00	6.2	0.031	0.050	1.04	32.8	0.1	0.46
							10.1											
A4	CICB6/7	STM102	0.121	0.78	0.09	0.09	10.0	104.2	27.3	200	1.00	6.2	0.031	0.050	1.04	32.8	0.1	0.83
							10.1											
	STM102	STM101B			0.00	0.15	10.1	103.7	42.3	300	0.35	71.2	0.071	0.075	0.81	57.2	1.5	0.74
							11.6											
A2	CB3/5	STM101B	0.036	0.79	0.03	0.03	10.0	104.2	8.3	200	1.00	2.1	0.031	0.050	1.04	32.8	0.0	0.25
							10.0											
	FUT. BLDG G	STM103	0.097	0.90			10.0	104.2	5.8	250	1.00	34.6	0.049	0.063	1.21	59.5	0.5	0.10
							10.5											
A3	CBMH4	STM103	0.248	0.87	0.22	0.22	10.0	104.2	62.6	300	0.50	26.9	0.071	0.075	0.97	68.4	0.5	0.92
							10.5											
	BLDG D	STM103	0.066	0.90			10.0	104.2	#REF!	250	1.00	3.5	0.049	0.063	1.21	59.5	0.0	#REF!
							10.0											
	STM103	STM101B			0.00	0.22	10.5	101.7	#REF!	375	0.38	47.3	0.110	0.094	0.98	108.1	0.8	#REF!
							11.3											
A1	CICB1/2	STM101B	0.121	0.76	0.09	0.09	10.0	104.2	26.7	200	1.00	5.9	0.031	0.050	1.04	32.8	0.1	0.81
							10.1											
	STM101B	STM101A			0.00	2.48	13.9	87.3	#REF!	900	0.15	46.5	0.636	0.225	1.10	701.1	0.7	#REF!
	STM101A	EF 10			0.00	2.48	14.6	84.9	#REF!	900	0.40	2.8	0.636	0.225	1.80	1144.9	0.0	#REF!
	EF 10	STM100			0.00	2.48	14.6	84.8	#REF!	900	0.13	22.8	0.636	0.225	1.03	652.7	0.4	#REF!
	STM100	OUTLET			0.00	2.48	15.0	83.6	#REF!	675	1.00	2.3	0.358	0.169	2.35	840.6	0.0	#REF!
							15.0											
Controlled Flow**																		
	STM101B	STM101A			0.00	0.48	13.9	87.3	#REF!	900	0.15	46.5	0.636	0.225	1.10	701.1	0.7	#REF!
	STM101A	EF 10			0.00	0.48	14.6	84.9	191.7	675	0.40	2.8	0.358	0.169	1.49	531.6	0.0	0.36
	EF 10	STM100			0.00	0.48	14.6	84.8	191.7	675	0.13	22.8	0.358	0.169	0.85	303.1	0.4	0.63
	STM100	OUTLET			0.00	0.48	15.1	83.3	191.7	675	1.00	2.3	0.358	0.169	2.35	840.6	0.0	0.23
							15.1											

** The controlled 100-year release rate is used downstream of the orifice

Note:

1) There is a Stormceptor located between STM 101A and STM 100.

2) Flows from buildings are controlled based on the 5-year storm and included within Qtotal.

Storm Sewer Calculation Sheet
5734-5754 Hazeldean Road/24 Iber Road

			5-YEAR			100-YEAR		
AREA ID	TOTAL AREA(m²)	TOTAL AREA(ha)	PERV(0.20)	IMP(0.90)	C-VALUE	PERV(0.25)	IMP(1.125)	C-VALUE
A1	1206.31	0.121	234.16	972.15	0.76	135.60	1070.71	1.00
A2	364.86	0.036	58.03	306.82	0.79	58.03	306.82	1.00
A3	2480.31	0.248	97.38	2382.93	0.87	165.75	2314.56	1.00
A4	1211.59	0.121	210.77	1000.82	0.78	211.09	1000.50	1.00
A5	722.59	0.072	177.75	544.83	0.73	177.75	544.83	1.00
A6	386.91	0.039	48.59	338.32	0.81	48.59	338.32	1.00
A7	582.93	0.058	72.02	510.91	0.81	72.02	510.91	1.00
A8	1206.34	0.121	44.70	1161.64	0.87	44.70	1161.64	1.00
A9	1281.89	0.128	80.67	1201.22	0.86	64.59	1217.29	1.00
A10	1159.65	0.116	49.12	1110.53	0.87	49.12	1110.53	1.00
A11	705.91	0.071	46.10	659.81	0.85	54.88	651.03	1.00
A12	1412.76	0.141	48.18	1364.58	0.88	48.18	1364.58	1.00
A13	1250.25	0.125	113.18	1137.07	0.84	113.18	1137.07	1.00
A14	1357.19	0.136	243.64	1113.55	0.77	243.64	1113.55	1.00
A15	520.38	0.052	77.50	442.88	0.80	77.50	442.88	1.00
A16	742.26	0.074	159.76	582.51	0.75	159.76	582.51	1.00
A17	702.69	0.070	0.00	702.69	0.90	0.00	702.69	1.00
A18	202.61	0.020	190.84	11.77	0.24	190.84	11.77	1.00
A19	2512.48	0.251	343.54	2168.95	0.80	343.54	2168.95	1.00
A20	1109.91	0.111	150.03	959.88	0.81	150.03	959.88	1.00
A21	727.30	0.073	27.94	699.36	0.87	27.94	699.36	1.00
A22	545.42	0.055	27.94	517.48	0.86	27.94	517.48	1.00
A23	367.58	0.037	23.25	344.34	0.86	23.25	344.34	1.00
A24	280.15	0.028	23.25	256.91	0.84	23.25	256.91	1.00
A25	1655.33	0.166	226.44	1428.89	0.80	226.44	1428.89	1.00
A26	523.77	0.052	29.28	494.49	0.86	29.28	494.49	1.00
A27	251.47	0.025	70.75	180.72	0.70	70.75	180.72	1.00
A28	907.23	0.091	91.75	815.48	0.83	91.75	815.48	1.00
A29	415.98	0.042	30.45	385.52	0.85	30.45	385.52	1.00
A30	549.74	0.055	120.06	429.69	0.75	120.06	429.69	1.00
A31	459.11	0.046	33.81	425.29	0.85	33.81	425.29	1.00
A32	620.12	0.062	311.01	309.11	0.55	311.01	309.11	1.00
BLDG A	1895.82	0.190	0.00	1895.82	0.90	0.00	1895.82	1.00
BLDG B	1404.15	0.140	0.00	1404.15	0.90	0.00	1404.15	1.00
BLDG BB	409.82	0.041	0.00	409.82	0.90	0.00	409.82	1.00
BLDG C	2884.52	0.288	0.00	2884.52	0.90	0.00	2884.52	1.00
BLDG D	661.80	0.066	0.00	661.80	0.90	0.00	661.80	1.00
BLDG G	970.30	0.097	0.00	970.30	0.90	0.00	970.30	1.00
U1	6790.56	0.679	6427.82	362.74	0.24	6419.46	371.10	1.00
U2	786.12	0.079	353.58	432.54	0.59	353.58	432.54	1.00
U3	154.46	0.015	0.00	154.46	0.90	0.00	154.46	1.00
AREA A	28423.02	2.842	3461.86	24961.16	0.81	3424.70	24998.32	1.00
AREA A + BLDG D	29084.82	2.908	3461.86	25622.96	0.82	3424.70	25660.12	1.00
AREA A+BLDG	36649.42	3.665	3461.86	33187.56	0.83	3424.70	33224.72	1.00
TOTAL	44380.56	4.438	10243.26	34137.30	0.74	10197.74	34182.82	1.00

PONDING AREAS

Elevation	Area(m²)
103.30	137.59
103.35	745.15
103.40	1953.54
103.55	8389.86

Parameters

Units: Metric

Storage Volume: 81 Cu m

Chamber Selection: M-6

Header Row Position: Left

Fill Over Embedment Stone: 300 mm

Controlled By: width 9 m

Embedment Stone mm:

Over: 150 Under: 12 Porosity: 0.4

Min 150mm over and under

Double Stacked

Double Stacked?: No

Stone Between: 304.80

Note: After making an input change you must hit calculate to update the Field Diagram and Project Results.
* The image generation will not save if using MicroSoft Edge

Project Results

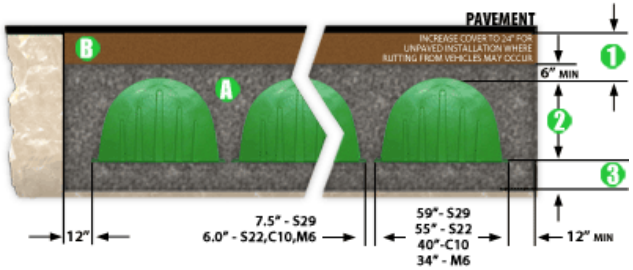

1	Total Cover Over Chambers: 451 mm
2	Height Of Chamber: 445 mm
3	Embedment Stone Under Chambers: 13 mm
A	Volume of Embedment Stone Required: 95 Cu. m
B	Volume of Fill Material Required: 69 Cu. m
Total Storage Provided: 82 Cu. m	
Type Of Chambers: M-6	
# Of Chambers Required: 274	
# Of End Caps Required: 18	
Required Bed Size: 230 Sq. m	
Volume of Excavation: 209 Cu. m	
* Area of Filter Fabric: 273 Sq. m	
# of Chambers Long: 33	
# of rows: 8	
Actual Trench Length: 26.93 m	
Actual Trench Width: 8.51 m	

* Filter Fabric quantity for Fabric on Top and Sides of System Only, does not include overlap

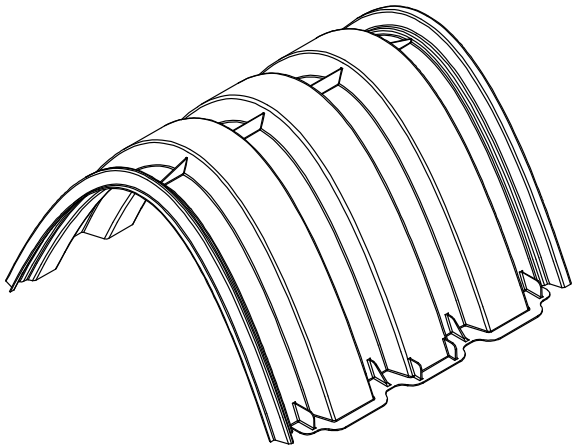

M-6 CHAMBER SPECS	
NOMINAL DIMENSIONS (LAYUP LENGTH X WIDTH X HEIGHT)	29.58" X 33.61" X 17.5" (751mm X 854mm X 445mm)
BARE CHAMBER STORAGE	5.6 CUBIC FEET (0.159 CUBIC METERS)
*MIN INSTALLED STORAGE	11.36 CUBIC FEET (0.322 CUBIC METERS)
CHAMBER WEIGHT	14 lbs (6.35 kg)
STORAGE PER LINEAR FOOT WITHOUT STONE	2.27 CUBIC FEET (0.064 CUBIC METERS)
STORAGE PER LINEAR FOOT WITH STONE	4.61 CUBIC FEET (0.131 CUBIC METERS)
*ASSUMING A MIN OF 6" (152mm) STONE ABOVE AND BELOW AND 6" (152mm) BETWEEN ROWS WITH 40% STONE POROSITY (DOES NOT INCLUDE 12" (305mm) PERIMETER STONE VOLUME)	

NOTE: M-6 CHAMBER DETAILS TESTED AND RATED FOR H-30 LOAD CONDITIONS WITH 18" (457mm) OF COVER AND NO PAVEMENT.

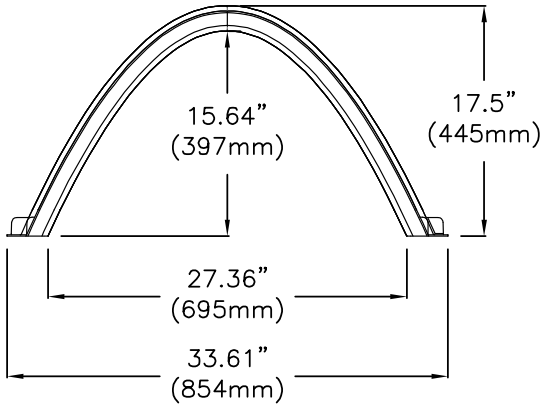

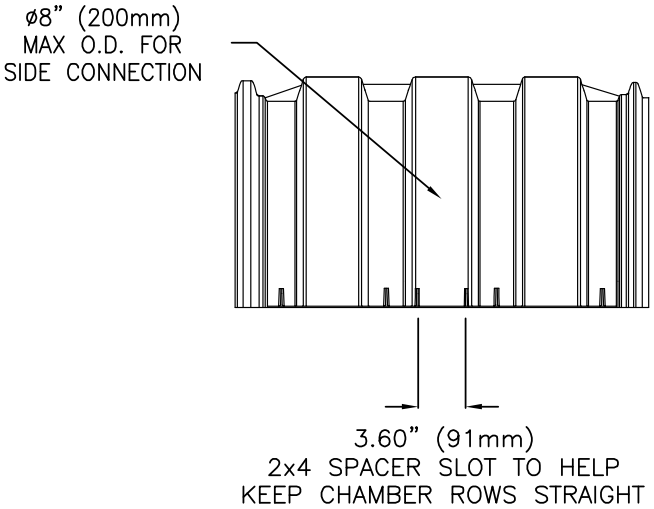

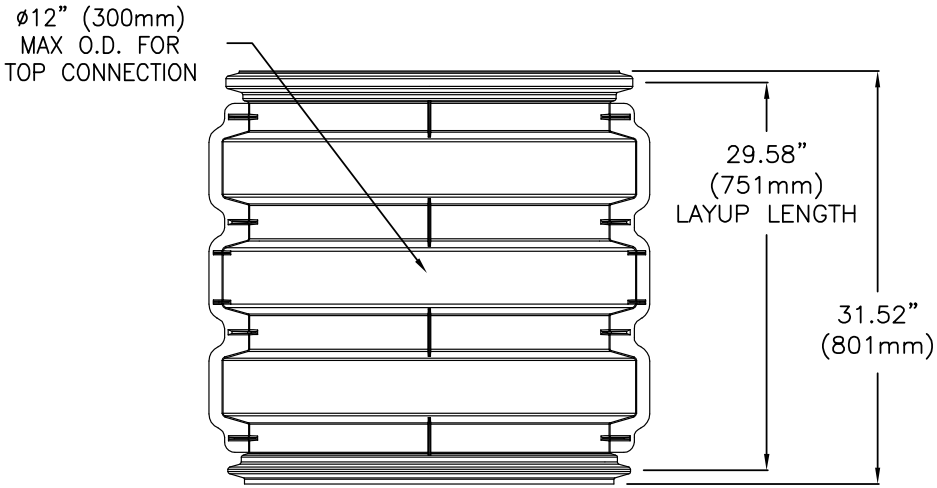

CONCEPTUAL PLAN DISCLAIMER

THIS GENERIC DETAIL DOES NOT ENCOMPASS THE SIZING, FIT, AND APPLICABILITY OF THE TRITON CHAMBER SYSTEM FOR THIS SPECIFIC PROJECT. IT IS THE ULTIMATE RESPONSIBILITY OF THE DESIGN ENGINEER TO ASSURE THAT THE STORMWATER SYSTEM DESIGN IS IN FULL COMPLIANCE WITH ALL APPLICABLE LAWS AND REGUALTIONS. TRITON PRODUCTS MUST BE DESIGNED AND INSTALLED IN ACCORDANCE WITH TRITON'S MINIMUM REQUIREMENTS. TRITON STORMWATER SOLUTIONS DOES NOT APPROVE PLANS, SIZING, OR SYSTEM DESIGNS. THE DESIGN ENGINEER IS RESPONSIBLE FOR ALL DESIGN DECISIONS.

TRITON STORMWATER SOLUTIONS
7600 EAST GRAND RIVER, STE.195
BRIGHTON, MI 48114
PHONE: (810) 222-7652 ● FAX: (810) 222-1769
WWW.TRITONSWS.COM

M-6 CHAMBER DETAIL

TRITON - STANDARD DETAILS

REVISED:
02-26-16 JWM

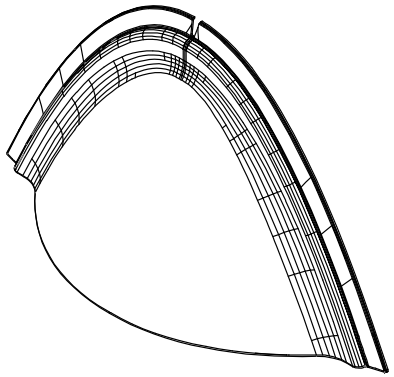

M-6 END CAP SPECS	
NOMINAL DIMENSIONS (LAYUP LENGTH X WIDTH X HEIGHT)	7.18" X 30.60" X 17.03" (183mm X 777mm X 432mm)
BARE END CAP STORAGE	0.533 CUBIC FEET (0.015 CUBIC METERS)
*MIN INSTALLED STORAGE	2.26 CUBIC FEET (0.064 CUBIC METERS)
*ASSUMING A MIN OF 6" (152mm) STONE ABOVE AND BELOW AND 6" (152mm) BETWEEN ROWS WITH 40% STONE POROSITY (DOES NOT INCLUDE 12" (305mm) PERIMETER STONE VOLUME)	

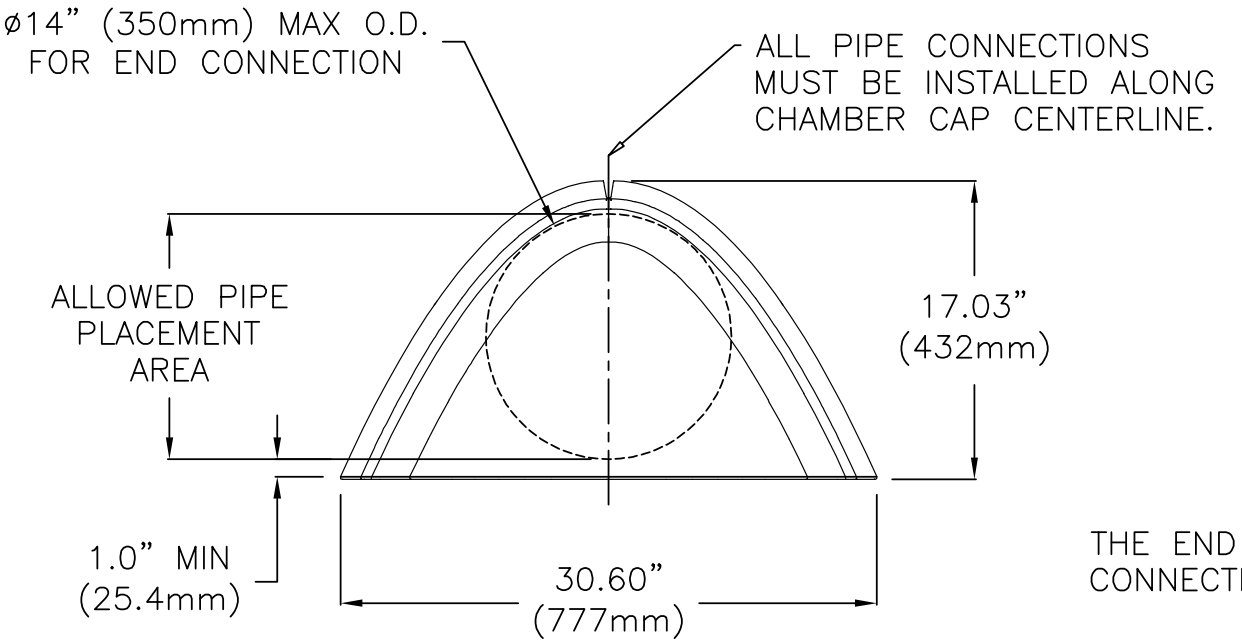

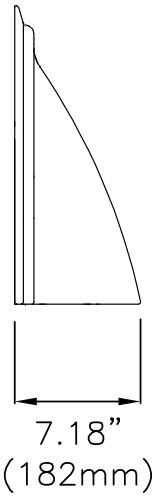

THE END CAP FITS UP INSIDE THE LAST CONNECTING RIBS OF THE M-6 CHAMBER

CONCEPTUAL PLAN DISCLAIMER

THIS GENERIC DETAIL DOES NOT ENCOMPASS THE SIZING, FIT, AND APPLICABILITY OF THE TRITON CHAMBER SYSTEM FOR THIS SPECIFIC PROJECT. IT IS THE ULTIMATE RESPONSIBILITY OF THE DESIGN ENGINEER TO ASSURE THAT THE STORMWATER SYSTEM DESIGN IS IN FULL COMPLIANCE WITH ALL APPLICABLE LAWS AND REGUALTIONS. TRITON PRODUCTS MUST BE DESIGNED AND INSTALLED IN ACCORDANCE WITH TRITON'S MINIMUM REQUIREMENTS. TRITON STORMWATER SOLUTIONS DOES NOT APPROVE PLANS, SIZING, OR SYSTEM DESIGNS. THE DESIGN ENGINEER IS RESPONSIBLE FOR ALL DESIGN DECISIONS.

TRITON STORMWATER SOLUTIONS

7600 EAST GRAND RIVER, STE.195
BRIGHTON, MI 48114
PHONE: (810) 222-7652 • FAX: (810) 222-1769
WWW.TRITONSWS.COM

M-6 CHAMBER END CAP DETAIL

TRITON - STANDARD DETAILS

REVISED:
02-26-16 JWM

TRITON M-6 PRODUCT SPECIFICATIONS

1.0 General

1.1 Triton chambers are designed to control stormwater runoff. As a subsurface retention or detention system, Triton chambers retain and allow effective infiltration of water into the soil. As a subsurface detention system, Triton chambers detain and allow for the metered flow of water to an outfall.

2.0 Chamber Parameters

2.1 The chamber shall be injection compression molded of a structural grade 1010 green soy resin composite to be inherently resistant to environmental stress cracking (ESCR), creep, and to maintain proper stiffness through temperature ranges of -40 degrees Fahrenheit to 180 degrees Fahrenheit (-40 degrees Celsius to 82.2 degrees Celsius).

2.2 The material property for the chamber and end cap must meet or exceed the following:
Tensile Strength- Ultimate: 21,755 PSI (150 Mpa)
Tensile Strength-Yield: 17,404 PSI (120 Mpa)
Tensile Modulus: 1,750-2,240 KSI (12,066 Mpa - 15,444 Mpa)
Flex Modulus: 1,600 KSI (11,032 Mpa)
Flex Yield Strength: 33,100 PSI (228 Mpa)
Compressive Strength: 30,457 PSI (210 Mpa)
Shear Strength: 11,500 PSI (79 Mpa)

2.3 The nominal chamber dimensions of the Triton M-6 shall be 17.5 inches tall (445 millimeters), 33.61 inches wide (854 millimeters) and 31.5 inches long (800 millimeters). Lay-up length is 29.58 inches (751 millimeters).

2.4 The chamber shall have an elliptical curved section profile.

2.5 The chamber shall be open-bottomed.

2.6 The chamber shall incorporate an overlapping corrugation joint system to allow chamber rows to be constructed.

2.7 The nominal storage volume of a Triton M-6 chamber shall be 11.36 cubic feet (0.322 cubic meters) per chamber when installed per Triton's typical details. This equates to 1.40 cubic feet (0.040 cubic meters) of storage per square foot of bed. This does not include perimeter stone.

2.8 The chamber shall have both of its ends open to allow for unimpeded hydraulic flows and visual inspections down a row's entire length.

2.9 The chamber shall have five corrugations to achieve strengths defined above.

2.10 The chamber shall have five circular and elliptical, indented and raised, surfaces on the top to the chamber for a maximum of 12 inch (300 millimeter) diameter optional top feed inlets, inspection ports and/or clean-out access ports.

2.11 The chamber side shall be capable of accepting pipe O.D. up to 8 inches (200 millimeters).

2.12 The chamber shall be analyzed, designed and field tested using AASHTO LRFD bridge design specifications 1. Design live load shall meet or exceed the AASHTO HS30 or a rear axle load of 48,000 pounds (21,772.4 kg). Design shall consider earth and live loads without pavement as appropriate for the minimum 18 inches (457 millimeters) of total cover to a maximum total cover of 50 feet (15.24 meters).

2.13 The chamber shall be manufactured in an ISO/TS16949:2002 and ISO 14001:2004 certified facility

2.14 The service life of the product is over 60 years under a constant sustained load of 10,000 PSI (68.95 Mpa) which is equal to the H-20 loading condition. Under typical loading conditions the Chamber and End Cap has a useful life span of 120 years from date of when manufactured.

3.0 End Cap Parameters

3.1 The end cap shall be Injection Compression molded of 1010 green soy resin to be inherently resistant to environmental stress cracking (ESCR), creep and to maintain proper stiffness through temperature ranges of -40 degrees Fahrenheit to 180 degrees Fahrenheit (-40 degrees Celsius to 82.2 degrees Celsius).

3.2 The end cap shall be designed to fit inside the last corrugation of a chamber, which allows the capping of each end of the chamber row.

3.3 The end cap shall have 7 different diameter connection guides across the front face of the bull nosed surface. The maximum diameter that the end cap can accept is 14 inches (350 millimeters) PS46, ASTM F679 PVC pipe.

3.4 The end cap shall have excess structural adequacies to allow cutting an orifice of any size at any invert elevation.

3.5 The primary face of an end cap shall have five corrugations and be angled outward to resist horizontal loads generated near the edges of beds.

3.6 The end cap shall be manufactured in an ISO/TS16949:2002 and ISO 14001:2004 certified facility.

3.7 The service life of the product to be over 60 years under a sustained load of 10,000 PSI (68.95 Mpa) which is equal to the H-20 loading condition.

3.8 The nominal storage volume of a Triton M-6 end cap shall be 2.26 cubic feet (0.064 cubic meters) per end cap when installed per triton's typical details. This equates to 1.15 cubic feet (0.032 cubic meters) of storage per square foot of bed.

4.0 Installation

4.1 Installation shall be in accordance with the latest Triton Installation manual that can be downloaded from the Triton website: www.tritonsws.com/support/downloads

7600 EAST GRAND RIVER, STE.195
BRIGHTON, MI 48114
PHONE: (810) 222-7652 ● FAX: (810) 222-1769
WWW.TRITONSWS.COM

M-6 PRODUCT SPECIFICATIONS

TRITON - STANDARD DETAILS

REVISED:
03-02-16 JWM

DRAWINGS / FIGURES

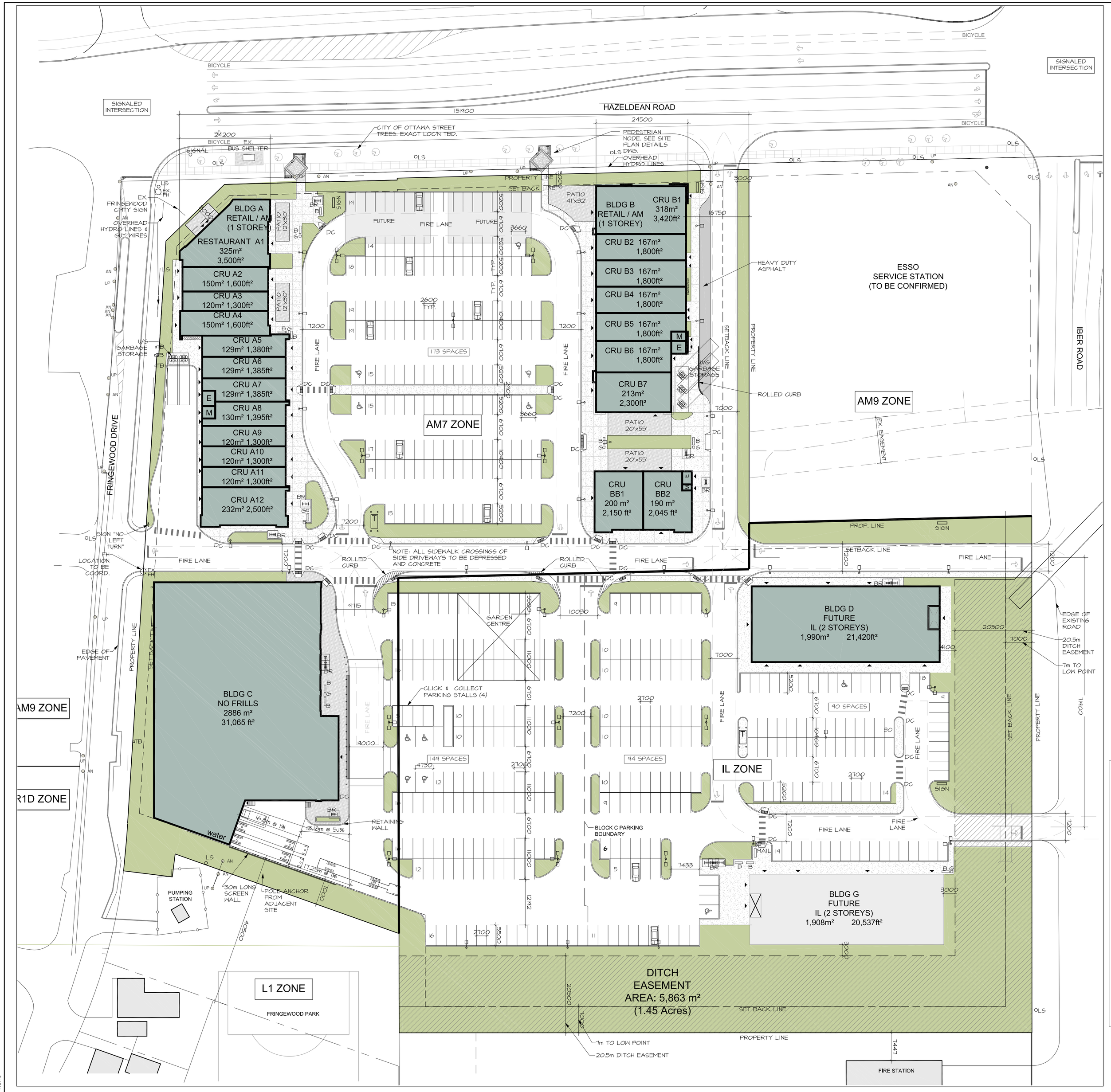

PART OF BLOCK 1
REGISTERED PLAN 4M-454 AND PART OF LOT 27 CONCESSION 11

AREA SUMMARY			
AM ZONE AREA:		PARKING RATIO	REQ'D SPOTS
BUILDING A	1854 sq.m		
BUILDING B	1,366 sq.m		
BUILDING BB	940 sq.m		
BUILDING C	2,886 sq.m		
TOTAL	6,446 sq.m	@3.6/100	234
IL ZONE AREA:			
BUILDING D (L1)	995 sq.m	@3.6/100	36
BUILDING D (L2)	995 sq.m	@2.4/100	24
BUILDING G (L1)	454 sq.m	@3.6/100	34
BUILDING G (L2)	454 sq.m	@2.4/100	23
TOTAL	3,848 sq.m.		117
TOTAL	10,394 sq.m		351

PARKING STALLS (2.6m x 5.2m)
REQUIRED 351 SPACES
PROVIDED 506 SPACES
EXTRA 155 SPACES

BARRIER-FREE PARKING (2.6m x 3.66m)
REQUIRED 5 SPACES
PROVIDED 11 SPACES

BICYCLE PARKING:			
AM ZONE AREA	6446 sq.m	@1/250	26
IL ZONE AREA	5260 sq.m	@1/250	18
TOTAL REQUIRED			44
TOTAL PROVIDED			64

*NOTE: RETAIL GFA REDUCED BY 5% TO ACCOUNT FOR MECHANICAL & NON-LEASED SPACE

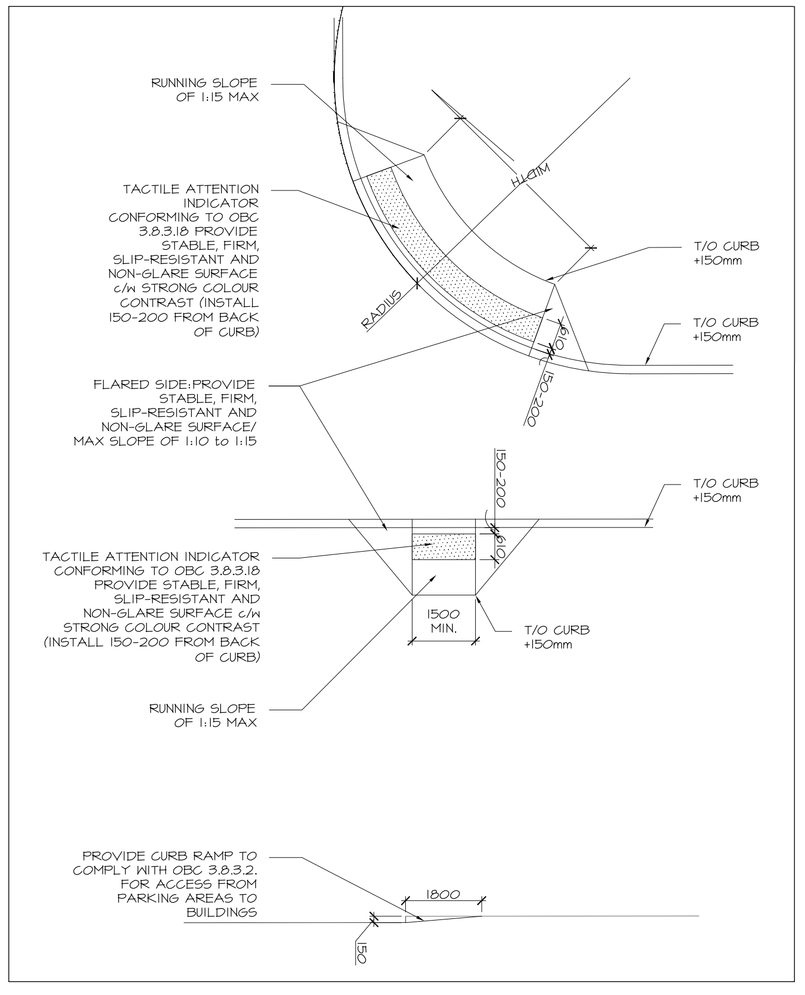

2 / A01 TYPICAL TWSI DETAILS/ TO BE PROVIDED AT EACH CROSS-WALK
NTS

	REQUIRED		PROVIDED	
	AM7	IL	AM7	IL
PERMITTED USE (AMONG OTHERS)	BANK, RESTAURANT, RETAIL STORE, DAY CARE, RETAIL FOOD, ECT.	DRIVE-THROUGH FACILITY, AUTOMOBILE SHOP, ANIMAL CARE, ECT.	ALL PERMITTED USES	
MIN. LOT AREA	600 SQ.M.	1,000 SQ.M.	44,355 SQ.M.	
MIN. LOT WIDTH	18m	NO MIN.	MULTIPLE WIDTHS EXCEEDING 18m	
MIN. FRONT & CORNER YARD SETBACK	NO MIN.	3m	N/A	3m
MIN. REAR YARD SETBACK	10m	3m	10m	10m
MIN. INTERIOR SETBACK	NO MIN.	3m	N/A	3m
MIN. OF 30% OF LOT WIDTH w/in 3m OF FRONT LOT LINE, MUST BE OCCUPIED BY BUILDNIG WALLS WHEN LOT IS 90m OR WIDER	BLOCK A BUILDING WALL= 25m BLOCK B BUILDING WALL = 25m PROPERTY WIDTH = 151m	N/A	48.7m / 151.9m = 32%	N/A
MAX. BUILDING HEIGHT	30m	22m	6.3m	6.3m
MAX F.S.I.	50% LOT COVERAGE	2	6,446/22,560 = 0.29	4,230/21,745 = 0.19
MIN. WIDTH LANDSCAPE AREAS	3m	3m WHEN ABUTTING STREET; OTHERWISE NO MIN.		
ACCESS DRIVE & PARKING AISLE (MIN. WIDTH)	6.7m	6.7m	6.7m	6.7m
PARKING SPACE - MIN. WIDTH X MIN. LENGTH	5.2m X 2.6m	5.2m X 2.6m	5.2m X 2.6m	5.2m X 2.6m
MIN. BARRIER FREE PARKING	5 SPACES		11 BARRIER FREE PARKING SPOTS	
BICYCLE PARKING	1/250 SQ.M. = 44		64 BIKE PARKING SPOTS	

LEGEND:
- LIGHT STANDARD/ EXISTING
- STREET TREE/ EXISTING
- HYDRO POLE/GUY WIRE
- BARRIER-FREE PARKING
- BIKE RACK
- GARBAGE RECEPTACLE
- BENCH
- FIRE LANE
- BUILDING ENTRANCE/EXIT
- UNIT PAVERS - TYPE 1
- UNIT PAVERS - TYPE 2
- PAINTED LINE CROSSWALK
- DEPRESSED CURB (c/w TWSI)
- WATERCOURSE REALIGNMENT
- PROPOSED BLDG FOOTPRINT - AM LANDS
- PROPOSED BLDG FOOTPRINT - IL LANDS
- MAIL/ COMMUNITY GROUP GARBAGE
- STOP LINE
- ROLLED CURB
- SITE PYLON SIGNAGE/ REFER TO STRUCT. DWGS. FOR FDN. DETAILS

CONTEXT PLAN: NTS

no.	date	revision
5	MAR. 08, 2019	ISSUED FOR PERMIT-ZONING REVIEW
4	DEC. 08, 2017	ISSUED FOR SITE PLAN REVISION
3	AUG. 12, 2014	FINAL RESPONSE TO CITY COMMENTS
2	APRIL 8, 2014	RESPONSE TO CITY COMMENTS #2
1	JAN. 14, 2014	RESPONSE TO SITE PLAN COMMENTS

It is the responsibility of the appropriate contractor to check and verify all dimensions on site and report all errors and/ or omissions to the architect.

All contractors must comply with all pertinent codes and by-laws.

Do not scale drawings.

This drawing may not be used for construction until signed.

Hobin Architecture Incorporated
63 Pamilla Street
Ottawa, Ontario
Canada K1G 3K7
T: 613-238-7200
F: 613-235-2005
E: email@hobinarc.com
hobinarc.com
HOBIN ARCHITECTURE

PROJECT/LOCATION:
HUNTINGTON PROPERTIES
5754 HAZELDEAN RD.

DRAWING TITLE:
SITE PLAN

DRAWN BY:	DATE:	SCALE:
SL	12/07/2017	1:500

PROJECT: 1734

DRAWING NO.: A01

REVISION NO.:

007 12 14 0014

None
None

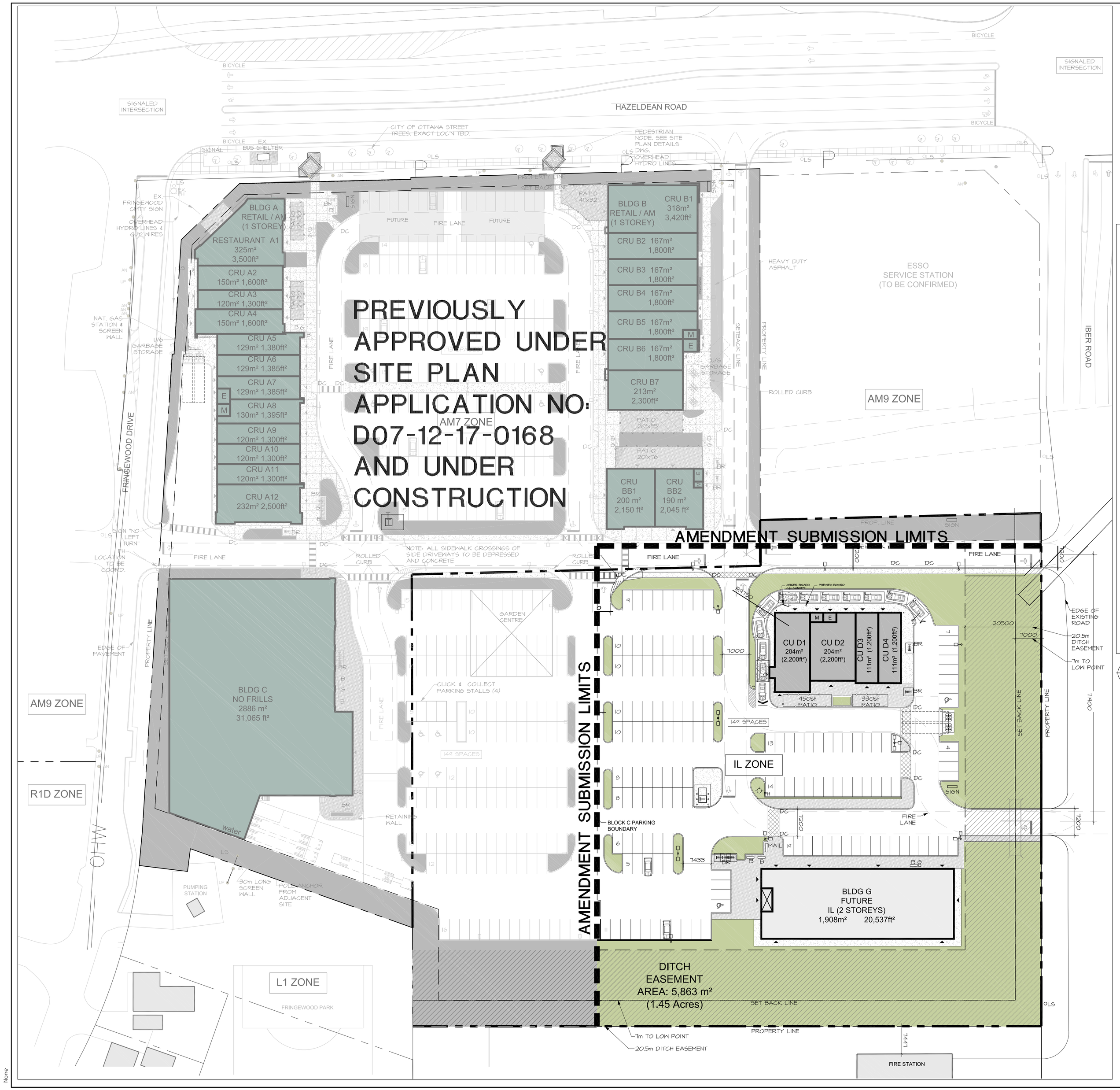

PART OF BLOCK 1
REGISTERED PLAN 4M-454 AND PART OF LOT 27 CONCESSION 11
GEOGRAPHIC TOWNSHIP OF GOULBOURN, CITY OF OTTAWA

AREA SUMMARY

IL ZONE AREA,			
BUILDING D:			
UNIT D1 w/ DT	204 sq.m	@10/100	16
UNIT D2	204 sq.m	@10/100	21
UNIT D3	111 sq.m	@3.4/100	4
UNIT D4	111 sq.m	@3.4/100	4
BUILDING G (L1)	454 sq.m	@3.6/100	34
BUILDING G (L2)	454 sq.m	@2.4/100	23
TOTAL	2,538 sq.m.		106

PARKING STALLS (2.6m x 5.2m)
REQUIRED 106 SPACES
PROVIDED 149 SPACES
EXTRA 43 SPACES

BARRIER-FREE PARKING (2.6m x 3.66m)
REQUIRED 2 SPACES
PROVIDED 2 SPACES

BICYCLE PARKING:

IL ZONE AREA	2,538 sq.m	@1/250	10
PROVIDED			25

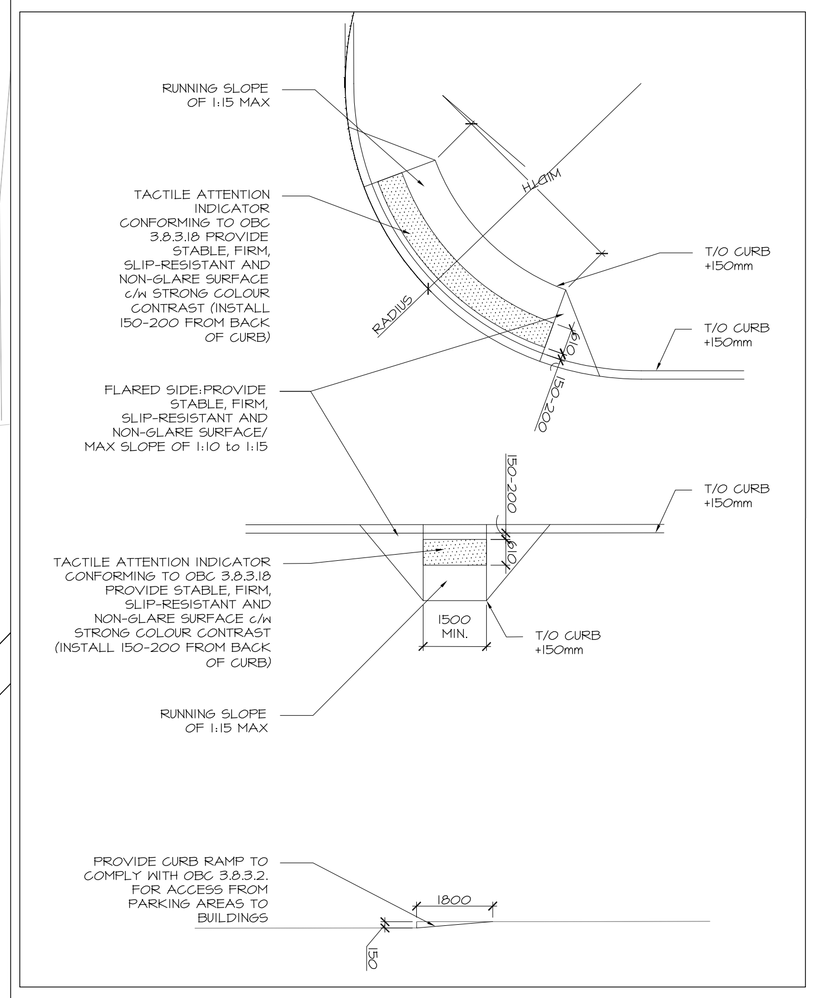

2 / A01 TYPICAL TWSI DETAILS/ TO BE PROVIDED AT EACH CROSS-WALK
NTS

	REQUIRED	PROVIDED
	IL	IL
PERMITTED USE (AMONG OTHERS)	DRIVE-THROUGH FACILITY, AUTOMOBILE SHOP, ANIMAL CARE, ECT.	ALL PERMITTED USES
MIN. LOT AREA	1,000 SQ.M.	44,355 SQ.M.
MIN. LOT WIDTH	NO MIN.	MULTIPLE WIDTHS EXCEEDING 18m
MIN. FRONT & CORNER YARD SETBACK	3m	3m
MIN. REAR YARD SETBACK	3m	10m
MIN. INTERIOR SETBACK	3m	3m
MIN. OF 30% OF LOT WIDTH w/in 3m OF FRONT LOT LINE, MUST BE OCCUPIED BY BUILDNIG WALLS WHEN LOT IS 40m OR WIDER	N/A	N/A
MAX. BUILDING HEIGHT	22m	6.3m
MAX F.S.I.	2	1,635/21745 = 0.075
MIN. WIDTH LANDSCAPE AREAS	3m WHEN ABUTTING STREET; OTHERWISE NO MIN.	
ACCESS DRIVE & PARKING AISLE (MIN. WIDTH)	6.7m	6.7m
PARKING SPACE - MIN. WIDTH X MIN. LENGTH	5.2m X 2.6m	5.2m X 2.6m
MIN. BARRIER FREE PARKING	2 SPACES	2 BARRIER FREE PARKING SPOTS
BICYCLE PARKING	1/250 SQ.M. = 44	64 BIKE PARKING SPOTS

LEGEND:
- LIGHT STANDARD/ EXISTING
- STREET TREE/ EXISTING
- HYDRO POLE/GUY WIRE
- BARRIER-FREE PARKING
- BIKE RACK
- GARBAGE RECEPTACLE
- BENCH
- FIRE LANE
- BUILDING ENTRANCE/EXIT
- UNIT PAVERS - TYPE 1
- UNIT PAVERS - TYPE 2
- PAINTED LINE CROSSWALK
- DEPRESSED CURB (c/w TWSI)
- WATERCOURSE REALIGNMENT
- PROPOSED BLDG FOOTPRINT - AM LANDS
- PROPOSED BLDG FOOTPRINT - IL LANDS
- MAIL/ COMMUNITY GROUP
- GARBAGE
- STOP LINE
- ROLLED CURB

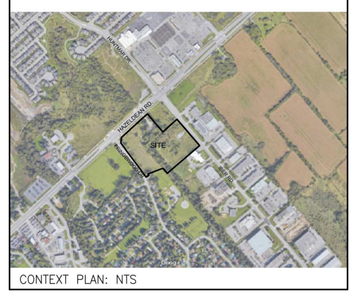

CONTEXT PLAN: NTS

no.	date	revision
7	MAY 23, 2019	ISSUED FOR REVISION TO SPA
6	MAR. 29, 2019	ISSUED FOR TENDER
5	MAR. 08, 2019	ISSUED FOR PERMIT-ZONING REVIEW
4	DEC. 08, 2017	ISSUED FOR SITE PLAN REVISION
3	AUG. 12, 2014	FINAL RESPONSE TO CITY COMMENTS
2	APRIL 8, 2014	RESPONSE TO CITY COMMENTS #2
1	JAN. 14, 2014	RESPONSE TO SITE PLAN COMMENTS

It is the responsibility of the appropriate contractor to check and verify all dimensions on site and report all errors and/ or omissions to the architect.

All contractors must comply with all pertinent codes and by-laws.

Do not scale drawings.

This drawing may not be used for construction until signed.

Hobin Architecture Incorporated
63 Partilla Street
Ottawa, Ontario
Canada K1S 3K7
T: 613-238-7200
F: 613-238-2005
E: mail@hobinarc.com
hobinarc.com
HOBIN ARCHITECTURE

PROJECT/LOCATION:
HUNTINGTON PROPERTIES
5754 HAZELDEAN RD.

DRAWING TITLE:
SITE PLAN

DRAWN BY:	DATE:	SCALE:
SL	12/07/2017	1:500

PROJECT: 1734

DRAWING NO.: A01

REVISION NO.:

2017 11 14

None
None

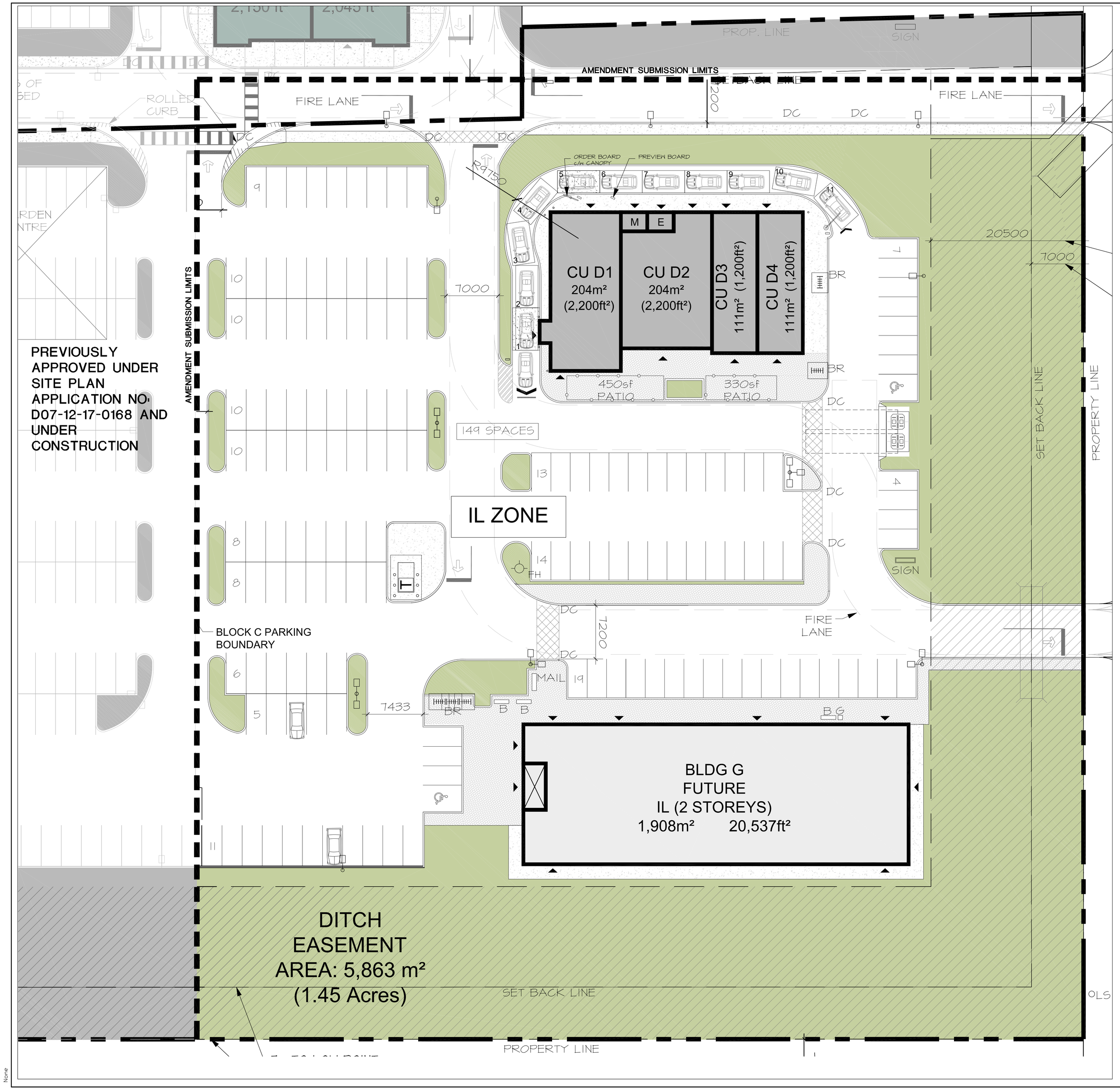

PART OF BLOCK 1
REGISTERED PLAN 4M-454 AND PART OF LOT 27 CONCESSION II
GEOGRAPHIC TOWNSHIP OF GOULBOURN, CITY OF OTTAWA

AREA SUMMARY

IL ZONE AREA:			
BUILDING D:			
UNIT D1 w/ DT	204 sq.m	@1.0/100	16
UNIT D2	204 sq.m	@1.0/100	21
UNIT D3	111 sq.m	@3.4/100	4
UNIT D4	111 sq.m	@3.4/100	4
BUILDING G (L1)	954 sq.m	@3.6/100	34
BUILDING G (L2)	954 sq.m	@2.4/100	23
TOTAL	2,538 sq.m.		106

PARKING STALLS (2.6m x 5.2m)
REQUIRED 106 SPACES
PROVIDED 149 SPACES
EXTRA 43 SPACES

BARRIER-FREE PARKING (2.6m x 3.66m)
REQUIRED 2 SPACES
PROVIDED 2 SPACES

BICYCLE PARKING:

IL ZONE AREA	2,538 sq.m	@1/250	10
PROVIDED			25

LEGEND:
- LIGHT STANDARD/ EXISTING
- STREET TREE/ EXISTING
- HYDRO POLE/GUY WIRE
- BARRIER-FREE PARKING
- BIKE RACK
- GARBAGE RECEPTACLE
- BENCH
- FIRE LANE
- BUILDING ENTRANCE/EXIT
- UNIT PAVERS - TYPE 1
- UNIT PAVERS - TYPE 2
- PAINTED LINE CROSSWALK
- DEPRESSED CURB (c/w TWSI)
- WATERCOURSE REALIGNMENT
- PROPOSED BLDG FOOTPRINT - AM LANDS
- PROPOSED BLDG FOOTPRINT - IL LANDS
- MAIL/ COMMUNITY GROUP
- GARBAGE
- STOP LINE
- ROLLED CURB

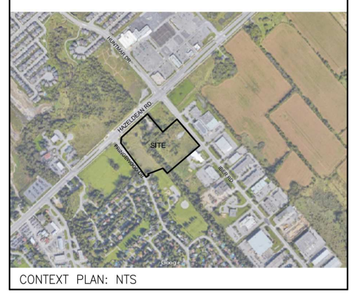

CONTEXT PLAN: NTS

no.	date	revision
1	XXXXXX	XXXXXXX

It is the responsibility of the appropriate contractor to check and verify all dimensions on site and report all errors and/or omissions to the architect.

All contractors must comply with all pertinent codes and by-laws.

Do not scale drawings.

This drawing may not be used for construction until signed.

	REQUIRED	PROVIDED
	IL	IL
PERMITTED USE (AMONG OTHERS)	DRIVE-THROUGH FACILITY, AUTOMOBILE SHOP, ANIMAL CARE, ECT.	ALL PERMITTED USES
MIN. LOT AREA	1,000 SQ.M.	44,355 SQ.M.
MIN. LOT WIDTH	NO MIN.	MULTIPLE WIDTHS EXCEEDING 18m
MIN. FRONT & CORNER YARD SETBACK	3m	3m
MIN. REAR YARD SETBACK	3m	10m
MIN. INTERIOR SETBACK	3m	3m
MIN. OF 30% OF LOT WIDTH w/in 3m OF FRONT LOT LINE, MUST BE OCCUPIED BY BUILDING WALLS WHEN LOT IS 90m OR WIDER	N/A	N/A
MAX. BUILDING HEIGHT	22m	6.3m
MAX F.S.I.	2	1,635/21745 = 0.075
MIN. WIDTH LANDSCAPE AREAS	3m WHEN ABUTTING STREET; OTHERWISE NO MIN.	
ACCESS DRIVE & PARKING AISLE (MIN. WIDTH)	6.7m	6.7m
PARKING SPACE - MIN. WIDTH X MIN. LENGTH	5.2m X 2.6m	5.2m X 2.6m
MIN. BARRIER FREE PARKING	2 SPACES	2 BARRIER FREE PARKING SPOTS
BICYCLE PARKING	1/250 SQ.M. = 44	64 BIKE PARKING SPOTS

Hobin Architecture Incorporated
63 Parmilla Street
Ottawa, Ontario
Canada K1S 3K7
T: 613-236-7200
F: 613-235-2005
E: mail@hobinarc.com
hobinarc.com

HOBIN ARCHITECTURE

PROJECT/LOCATION:
HUNTINGTON PROPERTIES
5754 HAZELDEAN RD.

DRAWING TITLE:
IL ZONE
SITE PLAN

DRAWN BY:	DATE:	SCALE:
SL	08/29/2019	1:250

PROJECT: 1734

DRAWING NO.: A02

REVISION NO.:

D07-12-17-0168