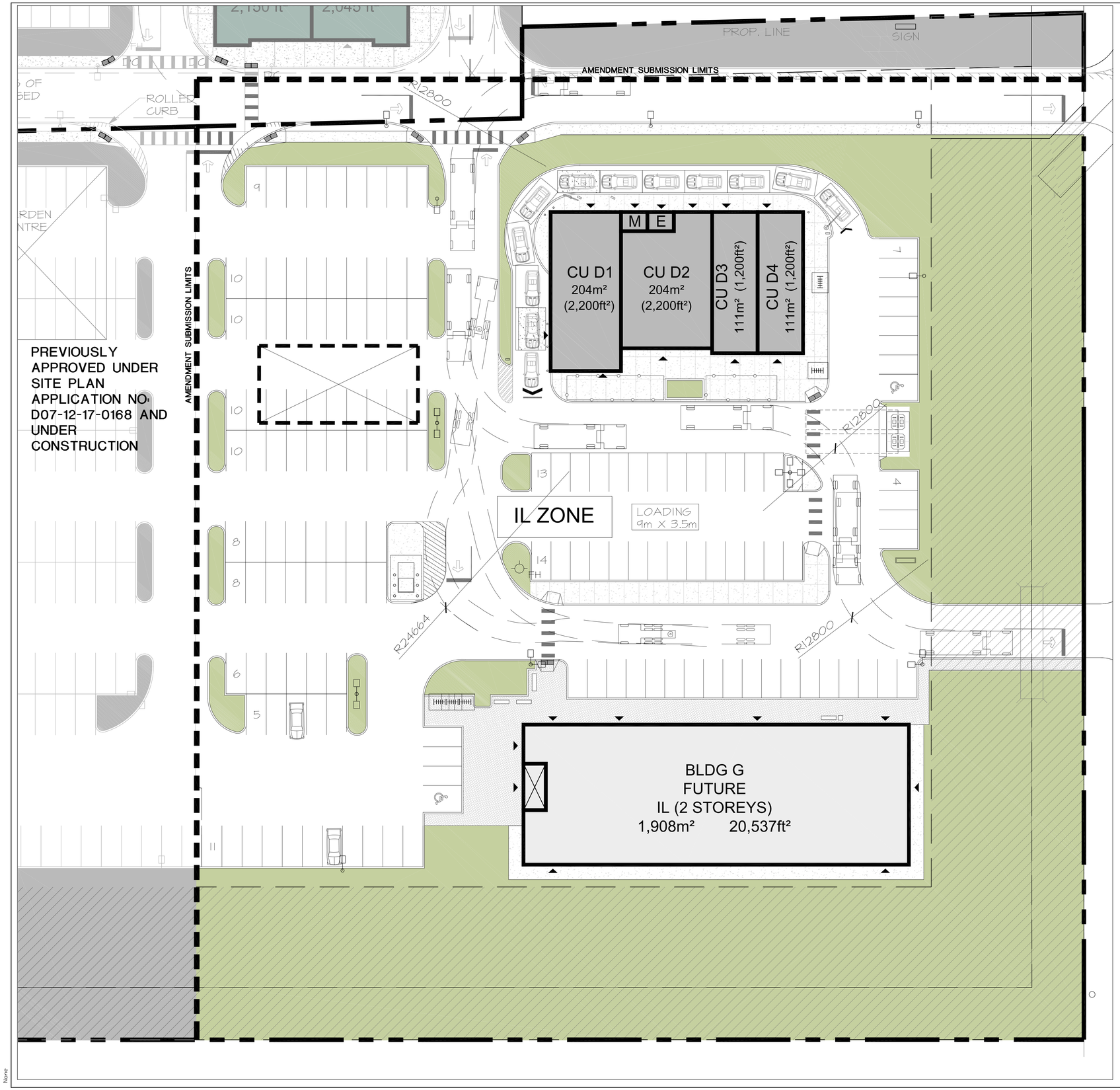

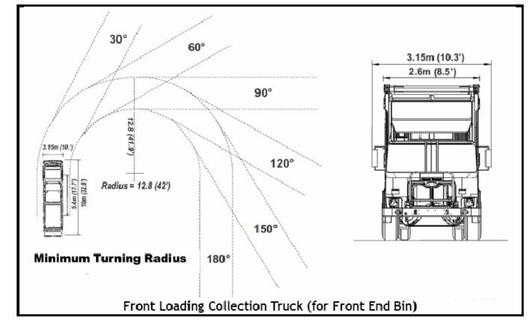

2 / A0.3 U/G GARBAGE STORAGE SERVICING DIAGRAM
NTS

LEGEND:

- LIGHT STANDARD/ EXISTING
- STREET TREE/ EXISTING
- HYDRO POLE/GUY WIRE
- BARRIER-FREE PARKING
- BIKE RACK
- GARBAGE RECEPTACLE
- BENCH
- FIRE LANE
- BUILDING ENTRANCE/EXIT
- UNIT PAVERS - TYPE 1
- UNIT PAVERS - TYPE 2
- PAINTED LINE CROSSWALK
- DEPRESSED CURB (c/w TWSI)
- WATERCOURSE REALIGNMENT
- PROPOSED BLDG FOOTPRINT - AM LANDS
- PROPOSED BLDG FOOTPRINT - IL LANDS
- MAIL/ COMMUNITY GROUP
- GARBAGE
- STOP LINE
- ROLLED CURB

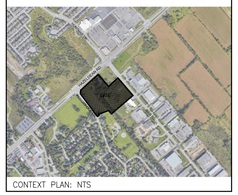

CONTEXT PLAN: NTS

no.	date	revision
1	SEPT. 20, 2019	ISSUED FOR SPA AMENDMENT #2

It is the responsibility of the appropriate contractor to check and verify all dimensions on site and report all errors and/ or omissions to the architect.

All contractors must comply with all pertinent codes and by-laws.

Do not scale drawings.

This drawing may not be used for construction until signed.

Copyright reserved.

ONTARIO ASSOCIATION OF ARCHITECTS
CARL J. HOBIN
LICENCE
3049

Hobin Architecture Incorporated
63 Pamilla Street
Ottawa, Ontario
Canada K1S 3K7
T: 613-238-7200
F: 613-235-2005
E: mail@hobinarc.com
hobinarc.com
HOBIN ARCHITECTURE

PROJECT/LOCATION:
HUNTINGTON PROPERTIES
5754 HAZELDEAN RD.

DRAWING TITLE:
IL ZONE
TRUCK TURNS PLAN

DRAWN BY:	DATE:	SCALE:
SL	08/29/2019	1:250

PROJECT: 1734

DRAWING NO.: A03

REVISION NO.:

D07-12-17-0168