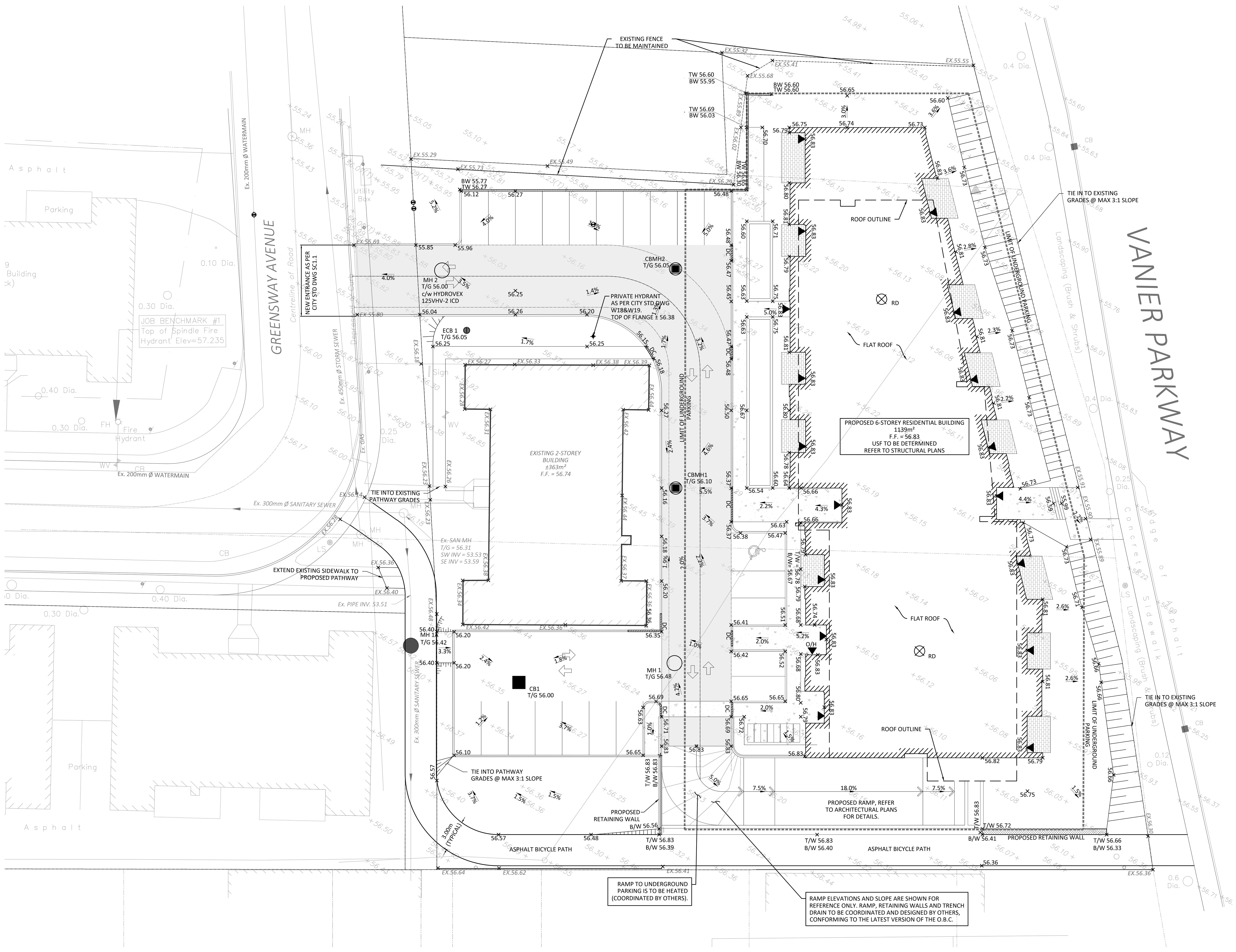

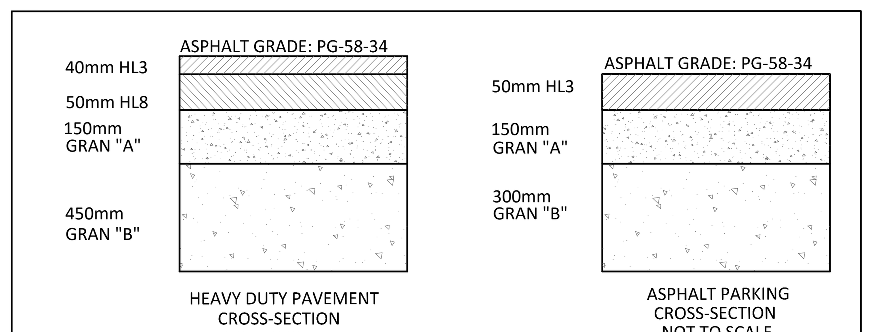

NOTE: REFER TO TABLES 2 & 3 ON PAGE 11 OF THE FINAL GEOTECHNICAL REPORT No. PG4461-1, DATED MAY 2018, PREPARED BY PATERSON GROUP INC. CONSULTING ENGINEERS.

EROSION AND SEDIMENT CONTROL

1. THE CONTRACTOR SHALL IMPLEMENT BEST MANAGEMENT PRACTICES, TO PROVIDE FOR PROTECTION OF THE AREA DRAINAGE SYSTEM AND THE RECEIVING WATERCOURSE, DURING CONSTRUCTION ACTIVITIES. THIS INCLUDES LIMITING THE AMOUNT OF EXPOSED SOIL, TEMPORARY SEDIMENT CONTROL (GEOSOCK INSERTS WITH AN OVERFLOW UNDER GRATE OR COVER) TO BE IMPLEMENTED DURING CONSTRUCTION ON ALL PROPOSED ROAD CATCHBASINS, REARYARD CATCHBASINS AND CATCHBASIN MANHOLES AND OTHER SEDIMENT TRAPS. NO RECYCLED GEOSOCK MATERIAL SHALL BE PERMITTED FOR USE ON SITE.
2. AT THE DISCRETION OF THE PROJECT MANAGER OR MUNICIPAL STAFF, ADDITIONAL SILT CONTROL DEVICES SHALL BE INSTALLED AT DESIGNATED LOCATIONS.
3. FOR SILT FENCE BARRIER, USE OPSD 219.110. GEOTEXTILE FOR SILT FENCE AS PER OPSS 1860, TABLE 3.
4. EXCEPT AS PROVIDED IN PARAGRAPHS 4.(a), and (b) BELOW, STABILIZATION MEASURES SHALL BE INITIATED AS SOON AS FEASIBLE IN PORTIONS OF THE SITE WHERE CONSTRUCTION ACTIVITIES HAVE TEMPORARILY OR PERMANENTLY CEASED, BUT IN NO CASE MORE THAN 14 DAYS AFTER THE CONSTRUCTION ACTIVITY HAS TEMPORARILY OR PERMANENTLY CEASED.
   - 4.1. WHERE THE INITIATION OF STABILIZATION MEASURES BY THE 14TH DAY AFTER CONSTRUCTION ACTIVITY TEMPORARILY OR PERMANENTLY CEASE IS PRECLUDED BY SNOW COVER, STABILIZATION MEASURES SHALL BE INITIATED AS SOON AS FEASIBLE.
   - 4.2. WHERE CONSTRUCTION ACTIVITY WILL RESUME ON A PORTION OF THE SITE WITHIN 21 DAYS FROM WHEN ACTIVITIES CEASED, (E.G. THE TOTAL TIME PERIOD THAT CONSTRUCTION ACTIVITY IS TEMPORARILY CEASED IS LESS THAN 21 DAYS) THEN STABILIZATION MEASURES DO NOT HAVE TO BE INITIATED ON THAT PORTION OF SITE BY THE 14TH DAY AFTER CONSTRUCTION ACTIVITY TEMPORARILY CEASED.
5. SEDIMENT THAT IS ACCUMULATED BY THE TEMPORARY EROSION AND SEDIMENT CONTROL MEASURES SHALL BE REMOVED IN A MANNER THAT AVOIDS ESCAPE OF THE SEDIMENT TO THE DOWNSTREAM SIDE OF THE CONTROL MEASURE AND AVOIDS DAMAGE TO THE CONTROL MEASURE. SEDIMENT SHALL BE REMOVED TO THE LEVEL OF THE GRADE EXISTING AT THE TIME THE CONTROL MEASURE WAS CONSTRUCTED AND BE ACCORDING TO THE FOLLOWING:
   - 5.1. FOR LIGHT-DUTY SEDIMENT BARRIERS, ACCUMULATED SEDIMENT SHALL BE REMOVED ONCE IT REACHES THE LESSER OF THE FOLLOWING:
     - 5.1.1. A DEPTH OF ONE-HALF THE EFFECTIVE HEIGHT OF THE CONTROL MEASURE.
     - 5.1.2. A DEPTH OF 300 MM IMMEDIATELY UPSTREAM OF THE CONTROL MEASURE.
   - 5.2. FOR ALL CONTROL MEASURES, ACCUMULATED SEDIMENT SHALL BE REMOVED AS NECESSARY TO PERFORM MAINTENANCE REPAIRS.
   - 5.3. ACCUMULATED SEDIMENT SHALL BE REMOVED PRIOR TO THE REMOVAL OF THE CONTROL MEASURE.
   - 5.4. ACCUMULATED SEDIMENT IS TO BE REMOVED AND DISPOSED OF AS PER OPSS 180.
6. ALL TEMPORARY EROSION AND SEDIMENT CONTROL MEASURES SHALL BE MONITORED TO ENSURE THEY ARE IN EFFECTIVE WORKING ORDER. THE CONDITION OF THE CONTROL MEASURES SHALL BE MONITORED PRIOR TO ANY FORECAST STORM EVENT AND FOLLOWING A STORM EVENT.
7. DUST CONTROL MEASURES SHOULD BE CONSIDERED PRIOR TO CLEARING AND GRADING. THE USE OF WATER, CALCIUM CHLORIDE FLAKES/SOLUTION OR MAGNESIUM CHLORIDE FLAKES/SOLUTION SHALL BE USED AS DUST SUPPRESSANTS AS PER OPSS 506. THIS IS TO LIMIT WIND EROSION OF SOILS WHICH MAY TRANSPORT SEDIMENTS OFFSITE, WHERE THEY MAY BE WASHED INTO THE RECEIVING WATER BY THE NEXT RAINSTORM.
8. ALL 'GREEN AREAS' TO BE TREATED WITH 150mm TOPSOIL AND SOD AS SOON AS FEASIBLE, AS PER OPSS 570.
9. TOPSOIL TO BE STRIPPED AND STOCKPILED FOR REHABILITATION. CLEAN FILL TO BE PLACED IN FILL AREAS AND COMPACTED TO 95% STANDARD PROCTOR DENSITY.
10. ALL DISTURBED AREAS TO BE RESTORED TO ORIGINAL CONDITION OR BETTER UNLESS OTHERWISE SPECIFIED.
11. STOCKPILED MATERIAL IS TO BE STORED AWAY FROM POTENTIAL RECEIVERS (E.G. STORM CATCHBASINS, MANHOLES), AND BE SURROUNDED BY EROSION CONTROL MEASURES WHERE MATERIAL IS LEFT IN PLACE IN EXCESS OF 14 DAYS.
12. IF REQUIRED, DEWATERING/SETTLING BASINS SHALL BE CONSTRUCTED AS PER OPSD 219.240 AND LOCATED ON FLAT GRADE UPSTREAM OF OTHER EXISTING MITIGATION MEASURES. WATERCOURSES SHALL NOT BE DIVERTED, OR BLOCKED, AND TEMPORARY WATERCOURSES CROSSINGS SHALL NOT BE CONSTRUCTED OR UTILIZED, UNLESS OTHERWISE SPECIFIED IN THE CONTRACT. IF CLOSURE OF ANY PERMANENT WATER PASSAGE IS NECESSARY, THE CONTRACTOR SHALL RELEASE ANY STRANDED FISH TO THE OPEN PORTION OF THE WATERCOURSE WITHOUT HARM.
13. ALL EROSION AND SEDIMENT CONTROL MEASURES SHALL CONFORM TO OPSS 577
14. WHERE DEWATERING IS REQUIRED, THE DISCHARGED WATER SHALL BE CONTROLLED IN ACCORDANCE WITH OPSS 518.
15. ALL SETTLING/FILTRATION BASINS SHALL BE EQUIPPED WITH TERRAFIX 270R GEOTEXTILE (OR APPROVED EQUIVALENT) AND SHALL BE CLEANED AND REPLACED AS REQUIRED.

GENERAL NOTES

1. THE ORIGINAL TOPOGRAPHY, GROUND ELEVATION AND SURVEY DATA SHOWN ARE SUPPLIED FOR INFORMATION PURPOSES ONLY, AND IMPLY NO GUARANTEE OF ACCURACY. IT SHALL BE THE RESPONSIBILITY OF THE CONTRACTOR TO VERIFY ALL INFORMATION OBTAINED FROM THEM.
2. THIS PLAN IS NOT A CADASTRAL SURVEY SHOWING LEGAL PROPERTY BOUNDARIES AND EASEMENTS. THE PROPERTY BOUNDARIES SHOW HEREON HAVE BEEN DERIVED FROM INFORMATION SUPPLIED BY THE CITY OF OTTAWA.
3. THE CONTRACTOR IS TO OBTAIN AND PAY FOR ALL NECESSARY PERMITS AND APPROVALS FROM THE CITY BEFORE COMMENCING CONSTRUCTION.
4. THE CONTRACTOR IS RESPONSIBLE FOR ALL LAYOUT.
5. THE CONTRACTOR IS TO DETERMINE THE EXACT LOCATION, SIZE, MATERIAL AND ELEVATION OF ALL EXISTING UTILITIES PRIOR TO COMMENCING CONSTRUCTION. CONTRACTOR TO PROTECT AND ASSUME ALL RESPONSIBILITY FOR EXISTING UTILITIES WHETHER OR NOT SHOWN ON THESE DRAWINGS. IF THERE IS ANY DISCREPANCY THE CONTRACTOR IS TO NOTIFY THE ENGINEER PROMPTLY.
6. RESTORE ALL TRENCHES AND SURFACES OF PUBLIC ROAD ALLOWANCES TO CONDITION EQUAL OR BETTER THAN ORIGINAL CONDITION AND TO THE SATISFACTION OF THE CITY OF OTTAWA AUTHORITIES.
7. EXCAVATE AND DISPOSE OF ALL EXCESS EXCAVATED MATERIAL, SUCH AS ASPHALT, CURBING AND DEBRIS, OFF SITE AS DIRECTED BY THE ENGINEER, OR THE CITY.
8. TOPSOIL TO BE STRIPPED AND STOCKPILED FOR REHABILITATION. CLEAN FILL TO BE PLACED IN FILL AREAS AND COMPACTED TO 95% STANDARD PROCTOR DENSITY.
9. ALL DISTURBED AREAS TO BE RESTORED TO ORIGINAL CONDITION OR BETTER UNLESS OTHERWISE SPECIFIED.
10. THE CONTRACTOR SHALL BE RESPONSIBLE FOR ALL TRAFFIC CONTROL AND SAFETY MEASURES DURING THE CONSTRUCTION PERIOD, INCLUDING THE SUPPLY, INSTALLATION, AND REMOVAL OF ALL NECESSARY SIGNAGE, DELINEATORS, MARKERS AND BARRIERS.
11. DO NOT ALTER GRADING OF THE SITE WITHOUT PRIOR APPROVAL OF THE CITY.
12. ALL ROADWAY, PARKING LOT, AND GRADING WORKS TO BE UNDERTAKEN IN ACCORDANCE WITH CITY STANDARDS AND SPECIFICATIONS AND PROVIDE POSITIVE DRAINAGE AWAY FROM THE BUILDING.
13. CONTACT THE CITY FOR INSPECTION OF ROUGH GRADING OF PARKING LOTS, ROADWAYS AND LANDSCAPED AREAS PRIOR TO PLACEMENT OF ASPHALT AND TOPSOIL. ALL DEFICIENCIES NOTED SHALL BE RECTIFIED TO THE CITY'S SATISFACTION PRIOR TO PLACEMENT OF ANY ASPHALT, TOPSOIL, SEED & MULCH AND/OR SOD.
14. ALL DIMENSIONS MUST BE VERIFIED PRIOR TO CONSTRUCTION, IF THERE IS ANY DISCREPANCY THE CONTRACTOR IS TO NOTIFY THE ENGINEER PROMPTLY.
15. CONTRACTOR TO ENSURE ALL INSTALLATIONS ARE IN ACCORDANCE WITH CURRENT CITY OF OTTAWA STANDARDS AND/OR ONTARIO PROVINCIAL STANDARDS.
15. THIS PLAN IS TO BE READ IN CONJUNCTION WITH THE GEOTECHNICAL REPORT BY PATERSON DATED MAY 22, 2018.

DOUGLAS JAMES, MCIP, RPP
MANAGER, DEVELOPMENT REVIEW - CENTRAL PLANNING, INFRASTRUCTURE & ECONOMIC DEVEVELOPMENT DEPARTMENT, CITY OF OTTAWA

APPROVED
By Jamesdo at 12:08 pm, Jun 19, 2019

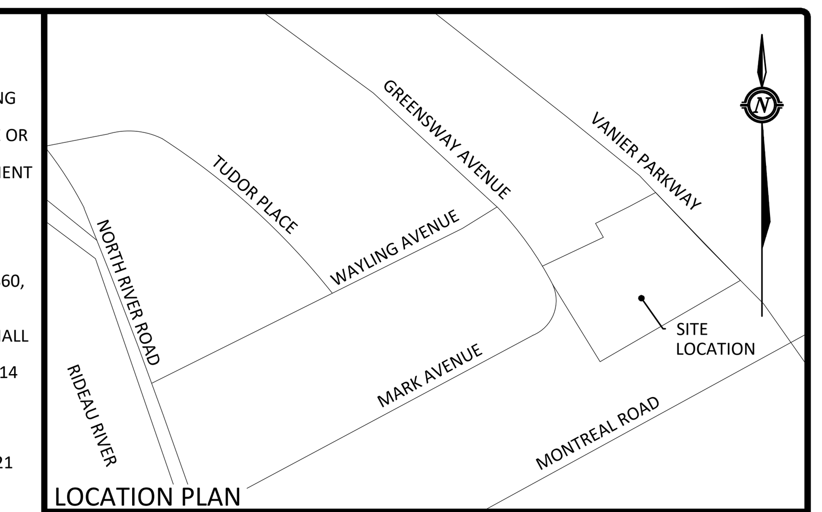

LOCATION PLAN

LEGEND

- BARRIER CURB
- CURB DEPRESSION
- HEAVY DUTY ASPHALT
- ASPHALT RAMP AND/OR WALKWAY
- CONCRETE RAMP AND/OR WALKWAY
- SWALE CENTERLINE
- TERRACING @ 3:1 SLOPE UNLESS SPECIFIED
- MH1 — STORM MANHOLE
- CBMH — CATCH BASIN MANHOLE
- CB DICB — CATCH BASIN OR DITCH INLET
- LANDSCAPE CATCH BASIN
- PERFORATED SUBDRAIN
- MH1A — SANITARY MANHOLE
- 73.21 — TYPICAL GRADE
- ×73.21 B/W — BOTTOM OF WALL GRADE
- ×73.21(S) — SWALE GRADE
- T/G 73.21 — TOP OF GRATE GRADE
- ×EX.73.21 — EXISTING GRADE (NOT SHOWN ON SURVEY)
- OVERLAND FLOW ROUTE
- 100yr PONDING
- 5yr PONDING
- × 76.16 — GRADE MARKER
- SILT FENCE

FOR REVIEW ONLY
NOT FOR CONSTRUCTION

No.	Revision/Issue	Date
5	REVISED AS PER CITY COMMENTS	APR. 03/2019
4	REVISED AS PER NEW SITE PLAN	FEB. 05/2019
3	REVISED AS PER CITY COMMENTS	OCT. 10/2018
2	ISSUED FOR SITE PLAN CONTROL	MAY 24/2018
1	ISSUED FOR COORDINATION	APR 26/2018

Check and verify all dimensions before proceeding with the work — Do not scale drawings

SCALE 1 : 200 (0 — 10 — 20 Metres)

McINTOSH PERRY
115 Walgreen Road, RR3, Carp, ON K0A 1L0
Tel: 613-836-2184 Fax: 613-836-3742
www.mcintoshperry.com

Stamp: LICENSED PROFESSIONAL ENGINEER 2019/04/05 R. P. KENNEDY 100086734 PROVINCE OF ONTARIO

Client:
Manor Park Management
231 BRITTANY, SUITE D
OTTAWA, ON
K1L 0R8

Project:
263 GREENSWAY AVENUE
SIX STOREY RESIDENTIAL BUILDING
VANIER ON

Drawing Title:
SITE GRADING AND DRAINAGE PLAN

Scale:	1:200	Project Number:	CP-18-0070
Drawn by:	L.A.L.		
Checked By:	R.P.K.	Drawing Number:	C101
Designed By:	L.A.L.		

D07-12-18-0082

#17640

FILENAME: H:\01 Project - Proposals\2018 Jobs\CP\0CP-18-0070 Anand Aggarwal_Greensway Apartment Manor Park_263 Greensway Avenue\Civil\15 - Drawings\0CP-18-0070 - PRESENTATION.dwg
LAST SAVED: Wednesday, February 27, 2019 LAST SAVED BY: s.leflar
LAST PLOTTED: Wednesday, April 03, 2019 CTB FILE USED: ----