May 16, 2019

Kirk Ringkamp
Sysco Tannis
2390 Stevenage Drive, Ottawa
K1G 3W1

Dear Mr. Ringkamp:

Re: Stationary Noise Cover Letter
Sysco Tannis - 390 Stevenage Drive, Ottawa
GWE File No.: 18-121 – Cover Letter R1

This letter describes how we have addressed the peer review comments prepared by Stantec and received from John Bernier at the City of Ottawa by e-mail dated May 2, 2019, pertaining to the stationary noise assessment performed for the proposed redevelopment of the Sysco Tannis facilities located at 2390 Stevenage Drive in Ottawa, Ontario. Below is a summary of how each of the comments relating to the noise study have been addressed. The letter sequence below is in reference to each of the lettered comments continued in the e-mail.

A: *The GWE report correctly identifies the applicable Ministry of the Environment, Conservation and Parks (MECP) guideline NPC-300 and the City of Ottawa Environmental Noise Control Guideline (ENCG).*
GWE Response: Concurrence, no action required.

B. *The acoustic report identifies eight (8) Points of Reception (POR) and they are representative receptors considered for the assessment. The receptors identified for the project included both outdoor and plane of window PORs as required.*
GWE Response: Concurrence, no action required.

C. *The receptor heights considered for the project are appropriate.*
GWE Response: Concurrence, no action required.

D. *The area surrounding the project identified as Class 2 Area which is appropriate for the Project based on the review of the aerial map (e.g., GoogleEarth).*

GWE Response: Concurrence, no action required.

E. *The model based on the international standard ISO 9613 noise propagation algorithms used for the Project is appropriate for the acoustic assessment.*

GWE Response: Concurrence, no action required.

F. *The noise criteria used in assessing facility operations are the exclusionary sound level limits provided in the guidelines for Class 2 areas and they are appropriate in the absence of baseline measurements. Otherwise, higher of the background sound levels or the exclusionary limit should have been considered.*

GWE Response: Concurrence, no action required. It should however be noted that background noise levels in the area are expected be lower than the exclusionary sound level limits, as the site is not in proximity to any transportation sources, unless the City decided to put a roadway through the protected corridor.

G. *Sound power level calculation formula presented in the report is appropriate, with the exception of the sound power level calculated looks for reefer (new unit). Sound power level for the reefer trailers reported looks lower than a typical unit. It is also mentioned in the report that the measurements were completed at a height of 1.5 m and at a distance of 2 m. Selection of measurement height might have caused lower sound level.*

GWE Response: Gradient Wind has performed additional on-site measurements on May 6, 2019 of straight truck and trailer reefer units (new unit - ThermoKing model T1280R and C-600M). The additional measurements were conducted at 5, 10 and 20 m from the reefer. Noise levels were observed to be the same at a height of 1.5 m and 3.5 m. All measurements showed good correlation and confirmed the earlier sound data used in the original report was reliable. Original sound testing was performed in April 2018 for the same truck reefer units, and an older trailer reefer unit. The report has been updated to reflect the results of the second round of measurements, which are presented in Appendix A. Furthermore, ThermoKing has provided manufacturer's sound data for these units, which correlates well with measured data. The ThermoKing data is measured at 7 m and is presented below. According to ThermoKing, the units only operate in high speed for a few minutes upon start up and quickly drop into a low speed operation which would be more akin to the equivalent sound pressure level when the unit is operating in

the staging area. It should also be noted that Sysco Tannis has confirmed they have already updated their fleet with new ThermoKing reefer units.

Unit	High Speed	Low Speed	60 Hz Electric Standby
T-1280R Spectrum	73.7 dBA	69.6 dBA	68.4 dBA
T-1280R Spectrum W/ Sound Kit	71.3 dBA	67.9 dBA	66.4 dBA

	Diesel		Electric Standby 19HS		Electric Standby 12HS	
	HS	LS	HS	LS	HS	LS
C-600	73.7	68.3		65.0		62.0
C-600M	73.6	67.4				
S-600	74.5	66.6		65.5		61.3
S-600M	72.7	64.5		66.0		62.0
S-610M	74.2	66.6		65.2		61.3
S-600DE	72.7	65.4				62.6
S-700	75.9	69.4				
SB 330	76.2	67.9				
SB 210	75.0	69.0				

H. *30 minutes of reefer operations during any 1-hour period in the assumption is unreasonable, they typically run continuous in any 1-hour period.*

GWE Response: While it is true for certain products that reefers can operate continuously, this has not been our experience with these units. They typically operate like a household refrigerator which will stop/start to maintain the internal temperature inside the trailer/truck. As per the manufactures owner's manual, this function is known as Cycle-Sentry (see attached documentation). Sysco Tannis maintains an efficient operation to minimize the use of diesel fuel. The assumption that these units operate continuously is overly conservative. Sysco Tannis has provided the following statement on this matter, and ThermoKing has published the following graphic[1] illustrating the cyclic mode the reefers operate in.

[1] https://www.thermoking.com/na/en/road/trailers/multi-temperature-controlled-units.html

"Our reefers do not run continuously throughout the hour. They run on a feature called "start/stop", essentially it runs much like a refrigerator. Once up to temperature, it only runs as required. In most cases, I would say this is only 20-30 mins of run time while parked and doors shut".

Graham Clermont | Vice President, Operations
Sysco | Ontario North Region

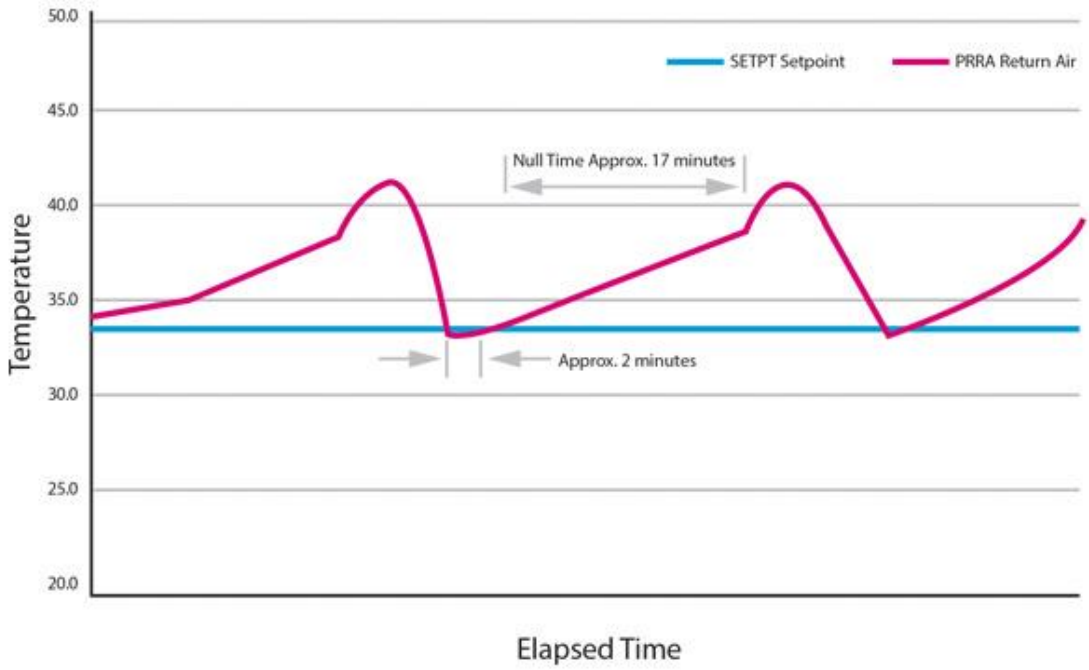

A test of an empty truck was performed on May 10, 2019. Information downloaded from the ServiceWatch controller by a ThermoKing master technician showed the unit operated approximately 25% of the time, much lower then the assumed 50% (30 min in any one-hour period). The attached spreadsheet shows the summarized data from the test (cool = reefer on, null = reefer off), as well as the raw output with relevant descriptions from a ThermoKing representative.

I. *A calculation check of the facility by Stantec indicates that the GWE noise model under-predicts sound levels at the first row of receptors. This may be due to time weighting used for the reefers and the sound level measurement/calculations mentioned above.*

GWE Response: The overly conservative assumptions mentioned in G and H, regarding reefer sound power and operation, are creating the difference in projected sound levels. As previously stated, we are confident in our approach which reflects a more realistic representation of the Sysco Tannis operations.

J. *The report provides sound power levels for old and new reefer trucks. However, measurement for the old reefer truck is not provided in the report.*

GWE Response: Old reefer unit sound data is based on Gradient Wind's cumulative observation on past projects, and not specific measurements at the Sysco facility. As such, measurement data for the old reefer units is not provided in the report. It should be noted that Sysco Tannis has now replaced the reefers on their entire fleet to new quieter ThermoKing units.

K. *Building footprint is almost doubled, and the report mentioned about addition of coolers for expansion. However, no additional stationary noise source is added to the expansion other than a compactor. Future operation (2029) scenario with 20 Straight Trucks and 27 Reefers is also considered in the assessment. No details on the current mix of trucks/reefer is discussed in report for comparison. A comparison of noise sources for existing and future operations is required to identify the change.*

GWE Response: Future mechanical equipment was not known during the initial report but is now included (see Section 4.3). The proposed mechanical package and equipment sound data has been attached to this letter. Mechanical equipment is generally insignificant compared to reefer units. Existing conditions reefer mix is described in the Section 2.1 and illustrated in Figure 3. Assumed sound power data for existing conditions sources is provided in Section 4.3. None of the existing mechanical equipment will remain after the expansion project.

L. *It is mentioned in the report that sound levels for the trucks and reefers are measured and that for rooftop units are taken from manufacturer's datasheets. There is no information provided on why the existing HVAC unit were not measured.*

GWE Response: Existing rooftop equipment is assumed based on Gradient Wind's experience with similar developments and manufacturer's sound data. Because summer and winter operations can vary, as well as the loading condition during the measurement, it may be uncertain that a worst-case scenario is being

captured. Existing mechanical equipment is to be removed during the expansion project, and therefore has no bearing on future noise levels. Furthermore, existing rooftop equipment noise levels are generally insignificant compared to reefer units and have been captured in Gradient Wind's long-term noise monitoring which correlates with predicted values. Future mechanical equipment is now considered in the repot, as per the response to Comment K.

M. *No exhaust fans were discussed in the report or included in the assessment. If they are insignificant sources, they should be listed and provided rationale.*

GWE Response: Exhaust fans have been included as part of the future mechanical equipment and are generally insignificant compared to reefer units.

N. *The report states the existing noise modelling has good correlation with the measured data. However, noise sources for the existing scenario are not listed in the report.*

GWE Response: Noise sources for the existing scenario are outlined in Section 2.1 and 4.3. Table 2 describes the sound power used for the existing (old) trailers. Note that the old trailers have been taken out of service with the upgrade of the owner's fleet. Source locations are illustrated in Figure 3. The major sources of noise observed during the measurements were reefers and truck movements. The measurements described in Gradient Wind's Noise Monitoring Assessment report, dated January 14, 2019, further support the assumptions in our report that the operations of the reefers of less than 30 min per any one hour is realistic. An extract from Chart 1 shows the fluctuation of sound pressure over the worst case one-hour period, which is more characteristic of a stop/start cycle of the various reefer units.

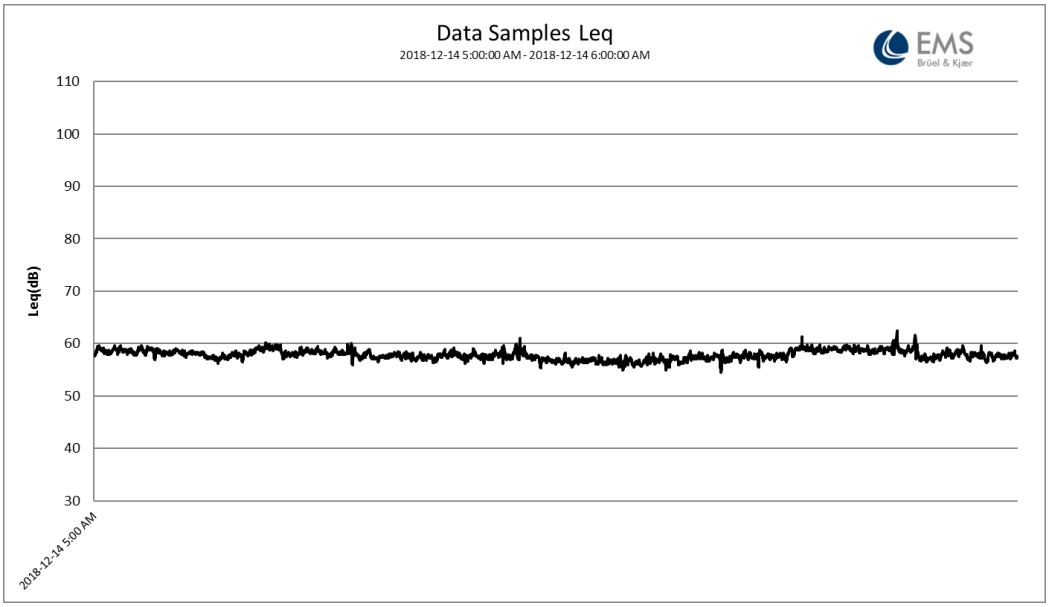

O. *Broadband backup beepers are recommended at the facility to avoid noise complaints from the neighbors as the peak truck operations are expected during nighttime period.*

GWE Response: Backup beeper sounds are not considered as a Stationary noise source as per NPC-300 Part A, and therefore were not included the model. Sysco however, has already committed to installing broadband/white noise beepers on their fleet, and have already installed them on most of their fleet. The conversion will be completed this summer.

P. *Answers to the City queries on items 59 and 63 (parking configuration considered as mitigation vs freedom to use any configuration as reported in GWE Report, date January 16, 2019) contradicts each other.*

GWE Response: For clarification, with the berm expansion all parking scenarios showed compliance with the ENCG sound level limits, thus Sysco Tannis would have freedom to park their trailers/trucks as they see fit. Without the berm expansion these parking scenarios were explored to see if there was any alternative to fully mitigate noise levels. Unfortunately, none of the various parking scenarios would 100% comply with the sound level limits, therefore the berm expansion was recommended.

This concludes our review of the peer review comments for the planned development at 2390 Stevenage Drive, Ottawa, Ontario. Please advise the undersigned of any questions or concerns.

Sincerely,

Gradient Wind Engineering Inc.

LICENSED PROFESSIONAL ENGINEER
J. R. FOSTER
100155655
May 16, 2019
PROVINCE OF ONTARIO

Michael Lafortune, C.E.T.
Environmental Scientist
GWE18-121 – Cover Letter R1

Joshua Foster, P.Eng.
Principal

REEFER DATA

Device : ServiceWatch
Truck/Trailer ID: 244246
Serial Number: A3087591822 3T1
Unit Serial Number: HTG1165472
Software Version: F035
Temperature: °F
Pressure: PSI

Time	Setpoint Zone-1	Return Zone-1	Discharge Zone-1	Coil Zone-1	Op Mode Zone-1	Ambient	Setpoint Zone-2	Return Zone-2	Discharge Zone-2	Coil Zone-2	Op Mode Zone-2	Unit Operating Mode	Suction Pressure	Discharge Pressure	Engine RPM	Engine Temp	Battery Volts	Shunt Current	Alternator Frequency	ETV State	ETV Position
	Power Switch On / Off: OFF																				
	Power up																				
	11	-----	-----	-----		-----	34	-----	-----	-----		Standby	-----	-----	-----	-----	-----	-----	-----	0	0
	Power up																				
	11	-----	-----	-----		-----	34	-----	-----	-----		Standby	-----	-----	-----	-----	-----	-----	-----	0	0
	Zone-1 Op Mode: Cool																				
	Zone-2 Op Mode: Cool																				
	Zone-3 Op Mode:																				
	11	47.6	47.4	47.2	Cool	53.8	34	48.6	48.1	47.9	Cool	Start, Diesel, Cycle-Sentry	103.6	103.9	0	52.8	12.6	-1	0	3	0
10/05/2019 6:42	Clock Set																				
10/05/2019 6:42	11	47.7	47.4	47.3	Cool	53.8	34	48.7	48.2	47.9	Cool	Start, Diesel, Cycle-Sentry	103.6	104	0	52.8	12.6	-1	0	3	0
10/05/2019 6:50	Zone-2 Op Mode: Null																				
10/05/2019 6:54	Zone-1 Op Mode: Null																				
10/05/2019 6:54	11	11	-2.9	-8.2	Null	58.7	34	34.6	25.1	16.9	Null	Diesel, Cycle-Sentry	5.4	161.2	836	159.4	13.9	4.7	237	4	800
10/05/2019 7:08	Zone-1 Op Mode: Cool																				
10/05/2019 7:08	11	16	14.6	11.5	Cool	55.8	34	36.7	32.6	28.5	Null	Start, Diesel, Cycle-Sentry	37.4	125	0	163.3	12.7	-1	0	3	100
10/05/2019 7:10	Zone-1 Op Mode: Cool																				
10/05/2019 7:13	Zone-1 Op Mode: Null																				
10/05/2019 7:13	11	11	-2.8	-7.7	Null	57.8	34	37.3	33.6	30	Null	Diesel, Cycle-Sentry	5.8	156.7	762	158.7	13.9	-1.3	333	4	800
10/05/2019 7:27	Zone-1 Op Mode: Cool																				
10/05/2019 7:27	Zone-2 Op Mode: Cool																				
10/05/2019 7:27	11	15.2	13.7	10.6	Cool	55.7	34	39	35.9	33.5	Cool	Start, Diesel, Cycle-Sentry	37.2	123.2	0	160.6	12.6	-0.1	0	3	100
10/05/2019 7:29	Check Alarm: Alarm 163 Set: (Emission Control Failure) Condition: 1																				
10/05/2019 7:29	Zone-1 Op Mode: Cool																				
10/05/2019 7:29	Alarm 163 Cleared: (Emission Control Failure)																				
10/05/2019 7:32	Zone-2 Op Mode: Null																				
10/05/2019 7:34	Zone-1 Op Mode: Null																				
10/05/2019 7:34	11	10.8	-2	-5.9	Null	59.1	34	34.4	24	15.8	Null	Diesel, Cycle-Sentry	11.1	159	410	159.2	13.2	5.4	205	4	800
10/05/2019 7:49	11	14.6	12.8	10.1	Null	56.4	34	35.5	31.1	26.8	Null	Diesel, Cycle-Sentry	37.6	127.3	0	164.8	12.7	-0.1	0	4	100
10/05/2019 7:54	Zone-1 Op Mode: Cool																				
10/05/2019 7:54	11	16	15.2	12.4	Cool	56.1	34	36.2	32.2	28.5	Null	Start, Diesel, Cycle-Sentry	40.4	124	0	159.5	12.6	-1	0	3	100
10/05/2019 7:58	Zone-1 Op Mode: Null																				
10/05/2019 7:58	11	10.9	-1.8	-6.4	Null	58.8	34	36.6	33	29.9	Null	Diesel, Cycle-Sentry	8.3	158.2	403	158.4	13.2	6	252	4	800
10/05/2019 8:13	11	14.7	13.2	10.3	Null	56.9	34	38.1	35.1	32.8	Null	Diesel, Cycle-Sentry	38.2	126.9	0	157.3	12.6	-0.1	0	4	100
10/05/2019 8:17	Zone-1 Op Mode: Cool																				
10/05/2019 8:17	11	16	15.2	12.5	Cool	56.4	34	38.5	35.6	33.4	Null	Start, Diesel, Cycle-Sentry	40.8	123.7	0	152.8	12.5	-1	0	3	100
10/05/2019 8:21	Zone-1 Op Mode: Null																				
10/05/2019 8:21	11	10.8	-2.5	-6.9	Null	57.9	34	38.9	35.9	33.7	Null	Diesel, Cycle-Sentry	13.2	157.8	395	158.7	13.3	4.2	128	4	800
10/05/2019 8:22	Zone-1 Op Mode: Cool																				
10/05/2019 8:22	Zone-2 Op Mode: Cool																				
10/05/2019 8:22	11	11.4	-2.3	-6.6	Cool	58.6	34	39	36	33.9	Cool	Start, Diesel, Cycle-Sentry	22.2	151.2	0	161.2	12.9	-1	0	3	100
10/05/2019 8:24	Check Alarm: Alarm 163 Set: (Emission Control Failure) Condition: 1																				
10/05/2019 8:24	Alarm 163 Cleared: (Emission Control Failure)																				
10/05/2019 8:27	Zone-2 Op Mode: Null																				
10/05/2019 8:28	Zone-1 Op Mode: Null																				
10/05/2019 8:28	11	10.9	-0.1	-2.8	Null	59.4	34	34.4	25.4	17.8	Null	Diesel, Cycle-Sentry	10.7	171.9	408	159.1	13.7	-2.5	225	4	800
10/05/2019 8:43	11	13.8	12	9.4	Null	56.9	34	35	30.9	26.8	Null	Diesel, Cycle-Sentry	37.9	129.7	0	160.8	12.7	-0.1	0	4	100
10/05/2019 8:50	Zone-1 Op Mode: Cool																				
10/05/2019 8:50	11	16	15.3	12.8	Cool	56.2	34	35.9	32.4	29.1	Null	Start, Diesel, Cycle-Sentry	42	124	0	152.8	12.5	-1	0	3	100
10/05/2019 8:54	Zone-1 Op Mode: Null																				
10/05/2019 8:54	11	10.8	-2	-6.2	Null	57.6	34	36.3	33	30.1	Null	Diesel, Cycle-Sentry	10	151.7	389	159.1	13.5	0.4	151	4	800
10/05/2019 9:09	11	14.4	12.7	9.7	Null	57.2	34	37.7	34.8	32.7	Null	Diesel, Cycle-Sentry	37.6	126.6	0	157.7	12.6	-0.1	0	4	100
10/05/2019 9:15	Zone-1 Op Mode: Cool																				
10/05/2019 9:15	11	16	15.1	12.3	Cool	56.2	34	38.1	35.4	33.4	Null	Start, Diesel, Cycle-Sentry	40.7	123.2	0	151.5	12.5	-1	0	3	100
10/05/2019 9:19	Zone-1 Op Mode: Null																				
10/05/2019 9:19	11	10.7	-2.5	-6.7	Null	57.1	34	38.5	35.7	33.6	Null	Diesel, Cycle-Sentry	7.8	152.9	395	159	13.3	6.4	200	4	800
10/05/2019 9:27	Zone-1 Op Mode: Cool																				
10/05/2019 9:27	Zone-2 Op Mode: Cool																				
10/05/2019 9:27	11	12.5	8	5.1	Cool	57.2	34	38.9	36.2	34.3	Cool	Start, Diesel, Cycle-Sentry	32.4	130.2	0	165.4	12.6	-1	0	3	100
10/05/2019 9:29	Check Alarm: Alarm 163 Set: (Emission Control Failure) Condition: 1																				
10/05/2019 9:29	Alarm 163 Cleared: (Emission Control Failure)																				
10/05/2019 9:31	Zone-2 Op Mode: Null																				
10/05/2019 9:33	Zone-1 Op Mode: Null																				
10/05/2019 9:33	11	10.8	-1.1	-3.8	Null	57.5	34	34.5	24.5	17.3	Null	Diesel, Cycle-Sentry	7.1	160.4	429	159	13.3	5.7	87	4	800
10/05/2019 9:48	11	13.8	11.9	9.1	Null	55.8	34	34.6	30.4	26.3	Null	Diesel, Cycle-Sentry	37.2	125.8	0	157.4	12.7	-0.1	0	4	100
10/05/2019 9:55	Zone-1 Op Mode: Cool																				
10/05/2019 9:55	11	16	14.9	12.4	Cool	56.4	34	35.5	31.8	28.5	Null	Start, Diesel, Cycle-Sentry	41.2	121.9	0	149	12.5	-0.1	0	3	100
10/05/2019 9:59	Zone-1 Op Mode: Null																				
10/05/2019 9:59	11	10.5	-2.8	-6.9	Null	57	34	35.8	32.3	29.3	Null	Diesel, Cycle-Sentry	13.6	154.9	431	160.7	13.3	3.1	243	4	800
10/05/2019 10:14	11	14.1	11.9	8.9	Null	60.2	34	37.1	34	31.8	Null	Diesel, Cycle-Sentry	36.5	126.1	0	154.9	12.6	-0.1	0	4	100
10/05/2019 10:21	Zone-1 Op Mode: Cool																				
10/05/2019 10:21	11	16	14.8	12	Cool	60.1	34	37.6	34.6	32.6	Null	Start, Diesel, Cycle-Sentry	40.2	121.5	0	147.3	12.5	-1	0	3	100
10/05/2019 10:24	Zone-1 Op Mode: Null																				
10/05/2019 10:24	11	10.9	-2.4	-6.2	Null	58.3	34	37.9	34.9	32.7	Null	Diesel, Cycle-Sentry	13.3	156.5	342	161.3	13.2	5.2	232	4	800
10/05/2019 10:39	11	14.6	12.5	9.4	Null	60	34	38.7	35.9	34	Null	Diesel, Cycle-Sentry	36.8	127.5	0	156.8	12.6	-0.1	0	4	100
10/05/2019 10:44	Zone-1 Op Mode: Cool																				
10/05/2019 10:44	11	16	14.6	11.7	Cool	60	34	38.9	36.2	34.2	Null	Start, Diesel, Cycle-Sentry	39.6	124.1	0	151.2	12.5	-1	0	3	100
10/05/2019 10:45	Zone-2 Op Mode: Cool																				
10/05/2019 10:46	Check Alarm: Alarm 163 Set: (Emission Control Failure) Condition: 1																				
10/05/2019 10:46	Alarm 163 Cleared: (Emission Control Failure)																				
10/05/2019 10:46	Zone-1 Op Mode: Cool																				
10/05/2019 10:49	Zone-2 Op Mode: Null																				
10/05/2019 10:50	Zone-1 Op Mode: Cool																				
10/05/2019 10:51	Zone-1 Op Mode: Null																				
10/05/2019 10:51	11	9	-4.4	-8.1	Null	59	34	34.1	24.5	16.2	Null	Diesel, Cycle-Sentry	7	156.8	395	159.1	13.3	6.6	158	4	800
10/05/2019 11:06	11	12.7	10.8	7.7	Null	62	34	34.4	30.1	25.9	Null	Diesel, Cycle-Sentry	35.2	133	0	161.6	12.7	-0.1	0	4	100
10/05/2019 11:17	Zone-1 Op Mode: Cool																				
10/05/2019 11:17	11	16	15.3	12.6	Cool	60.6	34	35.5	31.9	28.9	Null	Start, Diesel, Cycle-Sentry	41.1	125.3	0	150.4	12.5	-0.1	0	3	100
10/05/2019 11:21	Zone-1 Op Mode: Null																				
10/05/2019 11:21	11	10.8	-2.4	-6.3	Null	59.9	34	35.9	32.4	30.3	Null	Diesel, Cycle-Sentry	7.7	160.4	439	158.1	13.2	4.8	114	4	800
10/05/2019 11:36	11	14.3	12.2	9.1	Null	61.5	34	37	34.1	32.3	Null	Diesel, Cycle-Sentry	36.6	132.1	0	157.9	12.6	-0.1	0	4	100
10/05/2019 11:41	Zone-1 Op Mode: Cool																				
10/05/2019 11:41	11	16	14.7	11.8	Cool	60.5	34	37.4	34.7	32.9	Null	Start, Diesel, Cycle-Sentry	39.8	127.8	0	152.1	12.5	-0.1	0	3	100
10/05/2019 11:45	Zone-1 Op Mode: Null																				
10/05/2019 11:45	11	10.8	-2.6	-6.3	Null	58.6	34	37.7	34.9	33.2	Null	Diesel, Cycle-Sentry	8.8	155.1	368	157.9	13.7	12	144	4	800
10/05/2019 12:00	Clock Set																				
10/05/2019 12:00	11	14.4	12.2	9	Null	60.4	34	38.4	35.9	34.2	Null	Diesel, Cycle-Sentry	36.2	132.8	0	158.3	12.6	-0.1	0	4	100
10/05/2019 12:05	11	15.7	14.3	11.2	Null	59.9	34	38.6	36.1	34.3	Null	Diesel, Cycle-Sentry	38.9	129.7	0	153.6	12.6	-0.1	0	4	100

10/05/2019 12:05 Zone-1 Op Mode: Cool																				
10/05/2019 12:05 11	16	14.7	11.6	Cool	59.8	34	38.7	36.2	34.4	Null	Start, Diesel, Cycle-Sentry	39.4	129.2	0	152.8	12.5	-1	0	3	100
10/05/2019 12:09 Zone-1 Op Mode: Null																				
10/05/2019 12:09 11	10.9	-2.9	-6.4	Null	60	34	38.9	36.3	34.5	Null	Diesel, Cycle-Sentry	11.7	164.2	398	159.9	13.3	-2.6	200	4	800
10/05/2019 12:12 Zone-1 Op Mode: Cool																				
10/05/2019 12:12 Zone-2 Op Mode: Cool																				
10/05/2019 12:12 11	11.7	0.3	-2.5	Cool	61.4	34	39	36.4	34.6	Cool	Start, Diesel, Cycle-Sentry	25.4	148.6	0	166.6	12.7	-1	0	3	100
10/05/2019 12:14 Check Alarm: Alarm 163 Set: (Emission Control Failure) Condition: 1																				
10/05/2019 12:14 Alarm 163 Cleared: (Emission Control Failure)																				
10/05/2019 12:16 Zone-2 Op Mode: Null																				
10/05/2019 12:18 Zone-1 Op Mode: Null																				
10/05/2019 12:18 11	10.7	-1.4	-3.2	Null	61.1	34	34.4	24.4	17	Null	Diesel, Cycle-Sentry	11.7	174.5	351	159.2	13.4	-2.8	193	4	800
10/05/2019 12:33 11	13.8	11.4	8.3	Null	59.7	34	34.4	30.2	26.2	Null	Diesel, Cycle-Sentry	36.4	134.3	0	161.2	12.7	-0.1	0	4	100
10/05/2019 12:40 Zone-1 Op Mode: Cool																				
10/05/2019 12:40 11	16	14.4	11.7	Cool	60	34	35.2	31.6	28.3	Null	Start, Diesel, Cycle-Sentry	40.5	129.2	0	153	12.5	-1	0	3	100
10/05/2019 12:44 Zone-1 Op Mode: Null																				
10/05/2019 12:44 11	10.6	-3.2	-6.3	Null	61.3	34	35.5	32.1	29.6	Null	Diesel, Cycle-Sentry	8.5	169.5	449	159.1	13.8	0.6	111	4	800
10/05/2019 12:59 11	14.7	11.9	8.7	Null	60.8	34	36.8	33.9	32	Null	Diesel, Cycle-Sentry	35.9	130.3	0	156.5	12.6	-0.1	0	4	100
10/05/2019 13:04 Zone-1 Op Mode: Cool																				
10/05/2019 13:04 11	16	13.9	10.8	Cool	60.8	34	37.2	34.4	32.5	Null	Start, Diesel, Cycle-Sentry	38.4	128	0	151.2	12.5	-0.1	0	3	100
10/05/2019 13:08 Zone-1 Op Mode: Null																				
10/05/2019 13:08 11	10.8	-3.3	-6.4	Null	62.4	34	37.5	34.6	32.8	Null	Diesel, Cycle-Sentry	12.2	168.2	391	158.5	13.3	-3.4	220	4	800
10/05/2019 13:23 11	15	12.1	8.8	Null	61.2	34	38.4	35.8	34.1	Null	Diesel, Cycle-Sentry	35.8	130.5	0	154.5	12.6	-0.1	0	4	100
10/05/2019 13:26 Zone-1 Op Mode: Cool																				
10/05/2019 13:26 11	16	13.8	10.5	Cool	61.1	34	38.5	36	34.2	Null	Start, Diesel, Cycle-Sentry	37.8	128.7	0	150	12.5	-1	0	3	100
10/05/2019 13:30 Zone-1 Op Mode: Null																				
10/05/2019 13:30 11	10.8	-3.2	-6.1	Null	62.4	34	38.7	36.2	34.3	Null	Diesel, Cycle-Sentry	8.4	164	389	158.7	13.8	-2	150	4	800
10/05/2019 13:35 Zone-1 Op Mode: Cool																				
10/05/2019 13:35 Zone-2 Op Mode: Cool																				
10/05/2019 13:35 11	12.3	4.3	1.5	Cool	61.9	34	38.9	36.4	34.6	Cool	Start, Diesel, Cycle-Sentry	28.5	138.6	0	164.7	12.6	-0.2	0	3	100
10/05/2019 13:37 Check Alarm: Alarm 163 Set: (Emission Control Failure) Condition: 1																				
10/05/2019 13:37 Alarm 163 Cleared: (Emission Control Failure)																				
10/05/2019 13:39 Zone-2 Op Mode: Null																				
10/05/2019 13:41 Zone-1 Op Mode: Null																				
10/05/2019 13:41 11	10.8	-1.7	-3.2	Null	63.7	34	34.5	24.9	17.5	Null	Diesel, Cycle-Sentry	8.9	172.7	433	159.2	13.7	4.9	226	4	800
10/05/2019 13:56 11	14.3	11.5	8.4	Null	62.9	34	34.6	30.6	26.5	Null	Diesel, Cycle-Sentry	35.9	134.2	0	158.6	12.7	-0.1	0	4	100
10/05/2019 14:01 Zone-1 Op Mode: Cool																				
10/05/2019 14:01 11	16	13.8	10.9	Cool	62.8	34	35.3	31.7	28.3	Null	Start, Diesel, Cycle-Sentry	39	132.3	0	151.6	12.5	-0.2	0	3	100
10/05/2019 14:05 Zone-1 Op Mode: Null																				
10/05/2019 14:05 11	11	-3.4	-6.5	Null	64.3	34	35.7	32.3	29.8	Null	Diesel, Cycle-Sentry	11.6	173.8	392	159	13.4	-2.8	247	4	800
10/05/2019 14:20 11	15.3	12	8.5	Null	64.4	34	37	34.2	32.2	Null	Diesel, Cycle-Sentry	35.6	135.6	0	155.1	12.6	-0.2	0	4	100
10/05/2019 14:23 Zone-1 Op Mode: Cool																				
10/05/2019 14:23 11	16	13	9.6	Cool	64.5	34	37.2	34.4	32.5	Null	Start, Diesel, Cycle-Sentry	36.8	134.8	0	152.6	12.5	-1	0	3	100
10/05/2019 14:27 Zone-1 Op Mode: Null																				
10/05/2019 14:27 11	10.7	-3.6	-6.7	Null	66	34	37.5	34.8	33.2	Null	Diesel, Cycle-Sentry	8.1	172.5	385	159.3	13.2	1.3	248	4	800

End of data

Device : ServiceWatch
Truck/Trailer ID: 244246
Serial Number: A30875918223T1
Unit Serial Number: HTG1165472
Software Version: F035

Time	Setpoint Zone-1	% of Cycle
10/05/2019 6:50	Zone-2 Op Mode: Null	
10/05/2019 7:08	Zone-1 Op Mode: Cool	22%
10/05/2019 7:13	Zone-1 Op Mode: Null	
10/05/2019 7:27	Zone-1 Op Mode: Cool	26%
10/05/2019 7:32	Zone-2 Op Mode: Null	
10/05/2019 7:54	Zone-1 Op Mode: Cool	15%
10/05/2019 7:58	Zone-1 Op Mode: Null	
10/05/2019 8:17	Zone-1 Op Mode: Cool	17%
10/05/2019 8:21	Zone-1 Op Mode: Null	
10/05/2019 8:22	Zone-1 Op Mode: Cool	83%
10/05/2019 8:27	Zone-2 Op Mode: Null	
10/05/2019 8:50	Zone-1 Op Mode: Cool	15%
10/05/2019 8:54	Zone-1 Op Mode: Null	
10/05/2019 9:15	Zone-1 Op Mode: Cool	16%
10/05/2019 9:19	Zone-1 Op Mode: Null	
10/05/2019 9:27	Zone-1 Op Mode: Cool	33%
10/05/2019 9:31	Zone-2 Op Mode: Null	
10/05/2019 9:55	Zone-1 Op Mode: Cool	14%
10/05/2019 9:59	Zone-1 Op Mode: Null	
10/05/2019 10:21	Zone-1 Op Mode: Cool	12%
10/05/2019 10:24	Zone-1 Op Mode: Null	
10/05/2019 10:44	Zone-1 Op Mode: Cool	20%
10/05/2019 10:49	Zone-2 Op Mode: Null	
10/05/2019 10:50	Zone-1 Op Mode: Cool	50%
10/05/2019 10:51	Zone-1 Op Mode: Null	
10/05/2019 11:17	Zone-1 Op Mode: Cool	13%
10/05/2019 11:21	Zone-1 Op Mode: Null	
10/05/2019 11:41	Zone-1 Op Mode: Cool	17%
10/05/2019 11:45	Zone-1 Op Mode: Null	
10/05/2019 12:05	Zone-1 Op Mode: Cool	17%
10/05/2019 12:09	Zone-1 Op Mode: Null	
10/05/2019 12:12	Zone-1 Op Mode: Cool	57%
10/05/2019 12:16	Zone-2 Op Mode: Null	
10/05/2019 12:40	Zone-1 Op Mode: Cool	14%
10/05/2019 12:44	Zone-1 Op Mode: Null	
10/05/2019 13:04	Zone-1 Op Mode: Cool	17%
10/05/2019 13:08	Zone-1 Op Mode: Null	
10/05/2019 13:26	Zone-1 Op Mode: Cool	18%
10/05/2019 13:30	Zone-1 Op Mode: Null	
10/05/2019 13:35	Zone-1 Op Mode: Cool	44%

10/05/2019 13:39	Zone-2 Op Mode: Null	
10/05/2019 14:01	Zone-1 Op Mode: Cool	15%
10/05/2019 14:05	Zone-1 Op Mode: Null	
10/05/2019 14:23	Zone-1 Op Mode: Cool	18%
10/05/2019 14:27	Zone-1 Op Mode: Null	
	End of data	
	Average	25%

Appendix to the ServiceWatch Reefer Test Raw Output

1. The tested reefer unit is a 1280-R with the Whisper Package.

2. F305 Service Package software is used to monitor the Reefer's controller and all data required to ensure the system if functioning properly. This is Firmware and cannot be adjusted in the field by either ThermoKing or Sysco. The raw data set attached to this letter is taken directly from the Firmware, by a trained Thermoking technician.

3. The Version of the F305 Firmware is F35, and it has a software bug that has a "soft code 163" fault alarm. The root cause of this alarm which shows up in the raw data is not known, and the next version of software is expected to repair this problem. ThermoKing has informed us that this code does not affect the function or performance of the unit.

4. The ThermoKing Master Technician inspected the Reefer and its components to ensure it was running properly for this test. Prior to the test, competent Sysco and Penske personel inspected the zone and temperature configuration to ensure it was set correctly.

5. The unit is new, with only 14 hours on the Reefer engine as of the time of this test.

6. When the '163' fault appeared, the system was able to reset itself as necessary.

7. Note that the reefer was tested empty. This means that during the test the reefer had to drop the interior temperature from ambient to the cooler temp. Normally, the reefer will have a cooled load on board that will ensure the reefer interior temperature starts off at the target temperature, and the engine has only to maintain that temperature.

8. The following brochure cut speaks to the design of the units and the expected performance. ThermoKing has designed these units to be fuel efficient, running less than older style units.

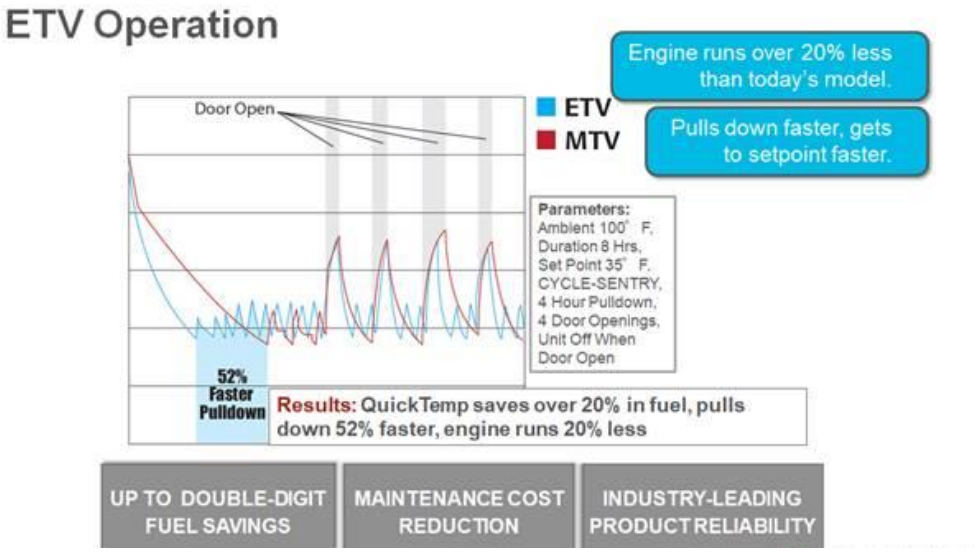

THERMO KING

Operator's Manual

Precedent™ Multi Temperature Units

C-600M, S-600M, S-600DE, and S-610DE

TK 56171-2-OP (Rev. 2, 05/16)

Ingersoll Rand®

CYCLE-SENTRY Start-Stop Controls

WARNING: The unit can start at any time without warning. Press the OFF key on the control panel and place the microprocessor On/Off switch in the Off position before inspecting or servicing any part of the unit.

The CYCLE-SENTRY Start-Stop fuel saving system provides optimum operating economy.

When CYCLE-SENTRY Mode is selected the unit will start and stop automatically to maintain setpoint, keep the engine warm and the battery charged. When Continuous Mode is selected, the unit starts automatically and runs continuously to maintain setpoint and provide constant airflow.

Data Logging

There are two separate data loggers. The data is downloaded through the Flash Drive Only USB port on the front of the control box using a flash drive and ThermoServ software.

Flash Drive Only USB Port: Standard USB drives that have been programmed with ThermoServ can be used in the Flash Drive Only USB Port. Use of a USB drive eliminates the need for an on-site computer and does not require cables.

The Flash Drive Only USB port can be used to:

- Download the CargoWatch and ServiceWatch Data Loggers.
- Flashload the Base Controller and HMI Control Panel.

MECHANICAL PACKAGE AND SOUND DATA

SYSCO TANNIS

2390 Stevenage Drive
Ottawa, Ontario

APPLICANT :
BBS GROUP
1805 WOODWARD DRIVE, OTTAWA, ONTARIO K2C 0P9
Pete@bbsconstruction.ca
PETE VAN GROOTHEEST T(613) 226.8830 F(613) 226.7709

ARCHITECTURAL:
GLENN PIOTROWSKI ARCHITECT LTD.
167 NAVY STREET, OAKVILLE, ONTARIO L6J 2Z6
gpiotrowski@gparchitect.ca
GLENN PIOTROWSKI T(905) 338.8855 F(905) 338.8868

CIVIL:
MCINTOSH PERRY CONSULTING ENGINEERS LTD
115 WALGREEN RD, CARP, ON K0A 1L0
c.melanson@mcintoshperry.com
CURTIS MELANSON T(613) 836.2184

STRUCTURAL:
CLELAND JARDINE ENGINEERING LTD.
200-580 TERRY FOX DRIVE, KANATA, ONTARIO, K2L 4B9
rmunden@clelandjardine.com
RYAN MUNDEN T (613) 591.1533

ELECTRICAL:
WSP CANADA INC.
1145 HUNT CLUB RD, OTTAWA, ON K1V 0Y3
david.groulx@wsp.com
DAVID GROULX T(613) 371.5192

MECHANICAL:
DILFO MECHANICAL LTD.
1481 CYRVILLE RD, OTTAWA, ON K1B 3L7
Pierre.Richer@dilfo.com
PIERRE RICHER T (613) 741.7731

HVAC & PLUMBING:
GOODKEY WEEDMARK
1688 WOODWARD DR, OTTAWA, ON K2C 3R8
rlefebvre@gwal.com
ROBERT LEFEBVRE T(613) 727.5111

FIRE PROTECTION:
LOWE FIRE PROTECTION- RSG ENGINEERING
101-2435 HOLLY LANE, OTTAWA, ONTARIO K1V 7P2
rtlowefire@on.aibn.com
RICHARD GOUBKO
RAYMOND TANGUAY T(613) 739.5693 F(613) 739.2922

REFRIGERATION:
PARSONS REFRIGERATION
37 CAPITAL DRIVE OTTAWA, ONTARIO K2G 0E7
sdparson@parsonref.ca
STUART PARSON T(613) 232.1171 F(613) 232.2498

LANDSCAPE:
GINO J. AIELLO LANDSCAPE ARCHITECT
50 CAMELOT DR, NEPEAN, ON K2G 5X8
gino@gjala.com
GINO AIELLO T (613) 852.1343

Sheet List

Sheet Number	Sheet Name
M0.01	MECHANICAL COVER PAGE
M0.02	MECHANICAL LEGENDS & SCHEDULES
M0.03	MECHANICAL SCHEDULES
M0.04	MECHANICAL DETAILS
M2.01	PLUMBING PARTIAL FLOOR PLAN - NORTH/OFFICE
M2.02	PLUMBING PARTIAL FLOOR PLAN - WAREHOUSE/DOCK
M2.03	PLUMBING PARTIAL FLOOR PLAN - SOUTH
M2.04	PLUMBING - OFFICE PLANS
M2.05	PLUMBING - ENLARGED FLOOR PLANS
M4.01	HVAC PARTIAL FLOOR PLAN - NORTH/OFFICE
M4.02	HVAC PARTIAL FLOOR PLAN - WAREHOUSE/DOCK
M4.03	HVAC PARTIAL FLOOR PLAN - SOUTH
M4.04	HVAC - OFFICE PLANS
M4.05	HVAC - ENLARGED FLOOR PLANS
M4.06	PARTIAL ROOF PLAN - NORTH/OFFICE
M4.07	PARTIAL ROOF PLAN - WAREHOUSE/DOCK
M4.08	PARTIAL ROOF PLAN - SOUTH

Good things come from Sysco®

Client

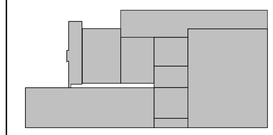

DATE	REVISION	REF
2019/04/26	ISSUED FOR FINAL COORDINATION	4
2019/03/29	ISSUED FOR 90% REVIEW	3
2019/02/15	ISSUED FOR PERMIT	2
2019/01/31	ISSUED FOR 66% REVIEW	1

THE ENGINEER WAIVES ANY AND ALL RESPONSIBILITY AND LIABILITY FOR PROBLEMS WHICH ARISE FROM FAILURE TO FOLLOW THESE PLANS, SPECIFICATIONS AND THE DESIGN INTENT THEY CONVEY, OR FOR PROBLEMS WHICH ARISE FROM OTHER FAILURE TO OBTAIN AND / OR FOLLOW THE ENGINEER'S GUIDANCE WITH RESPECT TO ANY ERRORS, OMISSIONS, INCONSISTENCES, AMBIGUITIES OR CONFLICTS WHICH ARE ALLEGED.

THIS DRAWING IS THE PROPERTY OF GOODKEY WEEDMARK & ASSOCIATES LIMITED AND ALL COPYRIGHTS ARE RESERVED. NO USE OF THIS DRAWING MAY BE MADE WITHOUT EXPRESS WRITTEN CONSENT.

DO NOT SCALE DRAWINGS.

L'INGENIEUR DECLINE TOUTE RESPONSABILITE DECOULANT DE PROBLEMES FAISANT SUITE AU NON RESPECT DES PLANS, DEVIS ET DE L'INTENTION DU CONCEPT QU'ILS INDIQUENT OU DE TOUS LES PROBLEMES PRIVANT RESULTER DU DEFAUT OBTENIR ET / OU DE SUIVRE LES CONSEILS DE L'INGENIEUR EN CE QUI CONCERNE LES ERREURS, OMISSIONS, INCONSISTANCES, AMBIGUITES OU CONFLITS ALLEGUES.

CE DESSIN EST LA PROPRIETE LITTERAIRE DE GOODKEY WEEDMARK & ASSOCIATES LIMITED ET TOUS LES DROITS SONT RESERVES. L'UTILISATION EST INTERDITE SANS LE CONSENTEMENT ECRIT DE L'AUTEUR.

NE PAS MESURER LES DESSINS A L'ECHELLE.

DESIGN BUILDER
BBS CONSTRUCTION (Ontario) LTD.
BBS CONSTRUCTION (ONTARIO) LTD.
1805 WOODWARD DRIVE, OTTAWA, ON K2C 0P9, CANADA
TEL. 613-226-8830 FAX. 613-226-7709

Goodkey Weedmark
Consulting Engineers
GOODKEY WEEDMARK & ASSOCIATES LIMITED
1688 Woodward Dr, Ottawa Ontario Canada K2C 3R8
613 727-5111 Voice
613 727-5115 Fax
www.gwal.com Web

Project north / Nord du projet | Seal/Sceau

Project/Projet
SYSCO
2390 Stevenage Drive
Ottawa, Ontario Canada

Drawing title/Titre du dessin
MECHANICAL COVER PAGE

Scale / Échelle: As indicated	Project no./No. du projet: 2018-626
Design by / Conçu par: D.NEWTON	Drawing/Dessin: M0.01
Drawn by / Dessiné par: D.NEWTON	
Reviewed by / Examiné par: Approver	
Date / Date: 01/30/19	Revision no: 4 / Acad file/Fichier:

MECHANICAL KPI 7 breakout.dwg
Author: C:\Users\dnewton\Documents\2018-626 10:27:47 PM 4/26/2019

HVAC LEGEND	
	BALANCING DAMPER (BD)
	MOTORIZED DAMPER (MD)
	FIRE DAMPER (FD)
	RECTANGULAR DUCT C/W TURNING VANES
	LINEAR SUPPLY DIFFUER (SL)
	EXTERIOR LOUVRE (L)
	SUPPLY GRILLE (SG)
	RETURN/EXHAUST GRILLE (RG/EG)
	DUCT ELBOW
	RECTANGULAR BEVELED TAKE-OFF
	ROUND TAKE-OFF
	DUCTWORK TRANSITION
	DUCT CAP
	DUCTWORK UP
	DUCTWORK DOWN
	RECTANGULAR DUCTWORK
	ROUND DUCTWORK
	WALL MOUNTED PROPELLOR FAN
	INLINE CENTRIFUGAL FAN
	CEILING MOUNTED INLINE CENTRIFUGAL FAN
	RANGE HOOD
	EXTERIOR WALL BOX (WB)
	VERTICAL STACK FAN COIL UNIT (FCU)
	HORIZONTAL FAN COIL UNIT (FCU)
EG1 / 150x150	EXHAUST GRILLE TAG TYPE SIZE (MM)
SD-1 / 200Ø / 95 L/s	SUPPLY GRILLE/DIFFUSER TAG TYPE SIZE (L/s) SIZE (MM
	SILENCER (SIL)
TF	TRANSFER FAN
EF	EXHAUST FAN

PLUMBING LEGEND	
DCW	DOMESTIC COLD WATER PIPING
DHW	DOMESTIC HOT WATER PIPING
DHWR	DOMESTIC HOT WATER RECIRCULATION PIPING
SAN	SANITARY PIPING
ST	STORM PIPING
NG	NATURAL GAS PIPING
	PIPING BELOW GRADE
	PIPE UP
	PIPE DOWN
	PIPE REDUCTION
	VERTICAL INLINE CIRCULATOR PUMP
	DOMESTIC WATER HEATER (DHWT)
	BACKFLOW PREVENTOR (BFP)
	PRESSURE REDUCIMG VALVE (PRV
	ISOLATION VALVE
	DOMESTIC WATER METER
	FLOOR DRAIN (FD)
	SCUPPER DRAIN
	ROOF DRAIN (RD)
	CIRCUIT BALANCING VALVE (CBV)
CO	CLEANOUT
HB	HOSE BIBB

DX SPLIT AC UNIT SCHEDULE

FAN COIL (INDOOR UNIT)								CONDENSING UNIT							
TAG	SYSTEM	LOCATION	CAPACITY (kW)	INDOOR DESIGN TEMP (DB/WB)(°C)	ELECTRICAL DATA FLA/MCA	ELECTRICAL DATA V/PH/Hz	BASIS OF DESIGN MAKE/MODEL	TAG	LOCATION	CAPACITY (kW)	AMBIENT TEMP (°C)	ELECTRICAL DATA MCA/MOP	ELECTRICAL DATA V/PH/Hz	BASIS OF DESIGN	REMARKS
AC1	CU1	SERVER ROOM	5.28	27/19	0.33/1	208/1/60	MITSUBISHI P-SERIES PKA-A18HA7	CU1	ROOF	5.28	-40 TO 46	11/28	208/1/60	MITSUBISHI P-SERIES PUY-A18KA7	-40°C LOW AMBIENT KIT, ADVANCED WIRED CONTROLLER

NOTES: 1. FOR DETAILS REFER TO SPECIFICATIONS.
2. MANUFACTURER NAME & MODEL NUMBER REPRESENT ACCEPTABLE QUALITY STANDARD ONLY.
3. ALTERNATIVE MATERIALS MAY BE APPROVED AFTER REVIEW OF TECHNICAL INFORMATION BY ENGINEER.

PROPELLER FAN SCHEDULE

TAG	LOCATION	FAN DIA. (mm)	AIR FLOW (L/s)	FAN SPEED (RPM)	ELECTRICAL DATA MOTOR SIZE (W)	ELECTRICAL DATA V/PH/Hz	BASIS OF DESIGN	REMARKS
PF1	REFER TO DRAWINGS	1400	2920	320	63	120/1/60	CANARM CP56S	REVERSIBLE MOTOR & SPEED CONTROLLER, INDUSTRIAL GUARD FG60C, 250mm DOWNROD, COLOUR WHITE.

NOTES: 1. FOR DETAILS REFER TO SPECIFICATIONS.

ERV SCHEDULE

UNIT NO.	LOCATION	AREA SERVED	SUPPLY FAN DATA FAN TYPE	SUPPLY AIR FLOW (L/s)	SUPPLY STATIC PRESS. (Pa) (EXTERNAL)	EXHAUST FAN DATA FAN TYPE	EXHAUST AIR FLOW (L/s)	EXHAUST STATIC PRESS. (Pa) (EXTERNAL)	ELECTRICAL DATA HP	V/PH/Hz	FLA/MCA/MOC	SOUND LEVER (dB)	FILTERS	BASIS OF DESIGN	REMARKS
ERV1	ROOF	WASHROOMS/LOCKER	DIRECT	472	124.5	DIRECT	472	124.5	½	115/1/60	15.4/18.3/25	–	MERV 8	NU-AIR ECM1000	–

NOTES: 1. FOR DETAILS REFER TO SPECIFICATIONS.

FAN SCHEDULE

TAG	LOCATION	FUNCTION	TYPE	DRIVE (BELT/DIRECT)	AIR FLOW (L/s)	ESP (Pa)	FAN SPEED (RPM)	SONES	MOTOR SIZE (HP)	V/PH/Hz	BASIS OF DESIGN	REMARKS
EF1	ROOF	DRY WAREHOUSE	UPBLAST CENTRIFUGAL	BELT	505	62	1058	7.3	1/4	208/1/60	GREENHECK CUBE-121	
EF2	ROOF	DRY WAREHOUSE	UPBLAST CENTRIFUGAL	BELT	505	62	1058	7.3	1/4	208/1/60	GREENHECK CUBE-121	
EF3	ROOF	DRY WAREHOUSE	UPBLAST CENTRIFUGAL	BELT	1010	62	865	10	1/3	208/1/60	GREENHECK CUBE-161	
EF4	ROOF	EXISTING DRY WAREHOUSE	UPBLAST CENTRIFUGAL	BELT	425	62	938	6.3	1/4	208/1/60	GREENHECK CUBE-121	
EF5	ROOF	EXISTING DRY WAREHOUSE	UPBLAST CENTRIFUGAL	BELT	425	62	938	6.3	1/4	208/1/60	GREENHECK CUBE-121	
EF6	ROOF	WAREHOUSE	UPBLAST CENTRIFUGAL	BELT	345	62	1215	6.9	1/4	208/1/60	GREENHECK CUBE-099	
EF7	ROOF	DRY HOUSE	UPBLAST CENTRIFUGAL	BELT	230	62	958	4.9	1/4	208/1/60	GREENHECK CUBE-099	
EF8	ROOF	DRY HOUSE	UPBLAST CENTRIFUGAL	BELT	230	62	958	4.9	1/4	208/1/60	GREENHECK CUBE-099	
EF9	ROOF	DRY HOUSE	UPBLAST CENTRIFUGAL	BELT	230	62	958	4.9	1/4	208/1/60	GREENHECK CUBE-099	
EF10	ROOF	DRY WAREHOUSE	UPBLAST CENTRIFUGAL	BELT	505	62	1058	7.3	1/4	208/1/60	GREENHECK CUBE-121	
EF11	ROOF	OFFICE WASHROOMS	UPBLAST CENTRIFUGAL	BELT	425	124	1093	7.4	1/4	208/1/60	GREENHECK CUBE-121	
EF12	ROOF	KITCHEN HOOD	UPBLAST CENTRIFUGAL	BELT	2595	124	814	17.3	1 1/2	575/3/60	GREENHECK CUBE-220	
EF13	ROOF	DISHWASHER HOOD	UPBLAST CENTRIFUGAL	BELT	236	124	1196	6.0	1/4	208/1/60	GREENHECK CUBE-099	
EF14	ROOF	ELECTRICAL ROOM	UPBLAST CENTRIFUGAL	BELT	425	62	938	6.3	1/4	208/1/60	GREENHECK CUBE-121	
EF15	ROOF	MECHANICAL ROOM	UPBLAST CENTRIFUGAL	BELT	2360	124	762	15.9	1 1/2	575/3/60	GREENHECK CUBE-220	
EF16	ROOF	FIRE PUMP ROOM	UPBLAST CENTRIFUGAL	BELT	1416	124	965	13.3	3/4	208/3/60	GREENHECK CUBE-180	
EF17	ROOF	VAULT	UPBLAST CENTRIFUGAL	BELT	6135	124	556	21	3	575/3/60	GREENHECK CUBE-360	
TF1	ELECTRICAL CLOSET	ELECTRICAL CLOSET	INLINE	DIRECT	85	62	900	3.2	1/30	115/1/60	GREENHECK SP-A200	

NOTES: 1. FOR DETAILS REFER TO SPECIFICATIONS.
2. DISCONNECT SWITCH BY DIV. 26.
3. SPEED SWITCHES SHALL BE SUPPLIED BY MECHANICAL CONTRACTOR, INSTALLED BY ELECTRICAL CONTRACTOR.

DUCT HEATER SCHEDULE

UNIT NO.	LOCATION	CAPACITY (kW)	ELECTRICAL (V/PH/Hz)	BASIS OF DESIGN	REMARKS
DH1	MULTIPURPOSE ROOM	4	208/1/60	GREENHECK IDHC	SCR CONTROL W/ AIR PROVING SWITCH AND HIGH LIMIT AND DUCT TEMP CONTROLLER
DH2	MEN'S LOCKER ROOM	4	208/1/60	GREENHECK IDHC	SCR CONTROL W/ AIR PROVING SWITCH AND HIGH LIMIT AND DUCT TEMP CONTROLLER
DH3	WOMEN'S LOCKER ROOM	10	208/1/60	GREENHECK IDHC	SCR CONTROL W/ AIR PROVING SWITCH AND HIGH LIMIT AND DUCT TEMP CONTROLLER

NOTES: 1. FOR DETAILS REFER TO SPECIFICATIONS.

BYPASS BOX SCHEDULE

UNIT NO.	LOCATION	MAX. FLOW (L/s)	MIN. FLOW (L/s)	INLET DIAMETER (mm)	BASIS OF DESIGN	REMARKS
BP1.1	OFFICE LEVEL 1	–	–	–	EH PRICE LGB	–
BP1.2	OFFICE LEVEL 1	–	–	–	EH PRICE LGB	–
BP1.3	OFFICE LEVEL 1	–	–	–	EH PRICE LGB	–
BP1.4	OFFICE LEVEL 1	–	–	–	EH PRICE LGB	–
BP1.5	OFFICE LEVEL 1	–	–	–	EH PRICE LGB	–
BP2.1	OFFICE LEVEL 2	–	–	–	EH PRICE LGB	–
BP2.2	OFFICE LEVEL 2	–	–	–	EH PRICE LGB	–
BP2.3	OFFICE LEVEL 2	–	–	–	EH PRICE LGB	–
BP2.4	OFFICE LEVEL 2	–	–	–	EH PRICE LGB	–

NOTES: 1. FOR DETAILS REFER TO SPECIFICATIONS.

FAN POWERED TERMINAL UNIT SCHEDULE

TAG	LOCATION	MAX. PRIMARY AIR (L/s)	MIN. PRIMARY AIR (L/s)	MAX. RETURN AIR (L/s)	TOTAL SUPPLY AIR (L/s)	INLET DIAMETER (mmø)	FILTERS	HEATING COIL HEATING CAPACITY (kW)	E.W.T. (°C)	L.W.T. (°C)	ELECTRICAL DATA MOTOR SIZE (HP)	V/PH/Hz	BASIS OF DESIGN	REMARKS
FPB1.1	OFFICE LEVEL 1	–	–	–	–	–	25mm THICK	–	–	–	1/4	208/1/60	EH PRICE FDC 1008	C/W ELECTRIC HEATING COIL DISCONNECT SWITCH, ECM MOTOR, INLET & DISCHARGE SILENCER, HANGER BRACKETS & RETURN FILTER ASSEMBLY
FBP1.2	OFFICE LEVEL 1	–	–	–	–	–	25mm THICK	–	–	–	1/3	208/1/60	EH PRICE FDC 2010	C/W ELECTRIC HEATING COIL DISCONNECT SWITCH, ECM MOTOR, INLET & DISCHARGE SILENCER, HANGER BRACKETS & RETURN FILTER ASSEMBLY
FPB2.1	OFFICE LEVEL 2	–	–	–	–	–	25mm THICK	–	–	–	1/4	208/1/60	EH PRICE FDC 1008	C/W ELECTRIC HEATING COIL DISCONNECT SWITCH, ECM MOTOR, INLET & DISCHARGE SILENCER, HANGER BRACKETS & RETURN FILTER ASSEMBLY
FPB2.2	OFFICE LEVEL 2	–	–	–	–	–	25mm THICK	–	–	–	1/4	208/1/60	EH PRICE FDC 1008	C/W ELECTRIC HEATING COIL DISCONNECT SWITCH, ECM MOTOR, INLET & DISCHARGE SILENCER, HANGER BRACKETS & RETURN FILTER ASSEMBLY
FPB2.3	OFFICE LEVEL 2	–	–	–	–	–	25mm THICK	–	–	–	1/4	208/1/60	EH PRICE FDC 1008	C/W ELECTRIC HEATING COIL DISCONNECT SWITCH, ECM MOTOR, INLET & DISCHARGE SILENCER, HANGER BRACKETS & RETURN FILTER ASSEMBLY
FPB2.4	OFFICE LEVEL 2	–	–	–	–	–	25mm THICK	–	–	–	1/4	208/1/60	EH PRICE FDC 1008	C/W ELECTRIC HEATING COIL DISCONNECT SWITCH, ECM MOTOR, INLET & DISCHARGE SILENCER, HANGER BRACKETS & RETURN FILTER ASSEMBLY

NOTES: 1. FOR DETAILS REFER TO SPECIFICATIONS.
2. ALL FPB SHALL HAVE A SINGLE POINT POWER SUPPLY.

MAKE UP AIR UNIT SCHEDULE

UNIT NO.	LOCATION	AREA SERVED	SUPPLY FAN DATA (VSD) FAN TYPE	AIR FLOW (L/s)	EXTERNAL STATIC PRESSURE (Pa)	TOTAL STATIC PRESSURE (Pa)	HP	GAS HEATING SECTION INPUT (kW)	OUTPUT (kW)	E.A.T. (°C)	L.A.T. (°C)	ELECTRICAL DATA V/PH/Hz	FLA/MCA/MOC	SOUND POWER LEVEL (dB) OCTAVE BAND	63	125	250	500	1000	2000	BASIS OF DESIGN	REMARKS
MAU1	OFFICE ROOF	KITCHEN	FORWARD CURVE	2823	248.8	534.8	7.5	138	127	-24.6	12.8	575/3/60	-/12/20	DISCHARGE LW(dB)	104	96	85	85	82	80	GREENHECK DG115-H20	
MUA2	ROOF	DRY WAREHOUSE	FORWARD CURVE	1010	248.8	448.7	1.5	52	48	-26.7	12.8	575/3/60	-/3.3/15	DISCHARGE LW(dB)	92	93	81	73	71	69	GREENHECK DG110-H10	
MUA3	ROOF	DRY WAREHOUSE	FORWARD CURVE	101	248.8	448.7	1.5	52	48	-26.7	12.8	575/3/60	-/3.3/15	DISCHARGE LW(dB)	92	93	81	73	71	69	GREENHECK DG110-H10	
MUA4	ROOF	EXISTING DRY WAREHOUSE	FORWARD CURVE	850	248.8	496.7	1.5	43	40	-26.1	12.8	208/3/60	-/8.9/15	DISCHARGE LW(dB)	81	79	83	79	67	58	GREENHECK DG-P115-H05-VFD	
MUA5	ROOF	WAREHOUSE/DRY DOCK	FORWARD CURVE	1043	248.8	451.6	1.5	53	49	-26.1	12.8	208/3/60	-/8.9/15	DISCHARGE LW(dB)	92	93	82	74	72	70	GREENHECK DG-110-H10	
MUA6	ROOF	DRY WAREHOUSE	FORWARD CURVE	505	248.8	417.1	1.0	26	24	-26.7	12.8	115/1/60	-/20.8/35	DISCHARGE LW(dB)	79	78	78	71	63	53	GREENHECK DG-P115-H05	

NOTES: 1. FOR DETAILS REFER TO SPECIFICATIONS.
2. MANUFACTURER NAME & MODEL NUMBER REPRESENTS ACCEPTABLE QUALITY STANDARD ONLY. ALTERNATIVE MATERIALS MAY BE APPROVED AFTER REVIEW OF TECHNICAL INFORMATION BY ENGINEER.
3. COMPLETE WITH: VFD, COIL CAVITY, REMOTE OPERATOR PANEL, 24" SEISMIC ROOF CURB, INTEGRAL FACTORY MOUNTED INTAKE LOUVRE, 20:1 TURNDOWN.

ROOFTOP UNIT SCHEDULE WITH HEAT RECOVERY

UNIT NO.	LOCATION	AREA SERVED	SUPPLY FAN DATA (VSD) FAN TYPE	AIR FLOW (L/s)	EXTERNAL STATIC PRESSURE (Pa)	TOTAL STATIC PRESSURE (Pa)	HP	GAS HEATING SECTION INPUT (kW)	OUTPUT (kW)	E.A.T. (DB) (°C)	L.A.T. (DB) (°C)	STAGES	REHEAT COIL DATA TOTAL CAPACITY (kW)	SENSIBLE CAPACITY (kW)	E.A.T. (DB/WB) (°C)	L.A.T. (DB/WB) (°C)	DX COOLING COIL DATA TOTAL CAPACITY (kW)	SENSIBLE CAPACITY (kW)	E.A.T. (DB/WB) (°C)	L.A.T. (DB/WB) (°C)	ELECTRICAL DATA V/PH/Hz	MCA/MOCP	SOUND POWER LEVEL (dB) OCTAVE BAND	63	125	250	500	1000	2000	BASIS OF DESIGN	REMARKS
RTU01	OFFICE ROOF	WEST OFFICE L2 PERIMETER		1373.4	199.1	248.8	2.00	35.2	28.1	15.6	32.5	2	9.5	6.8	23.9/17.1	20.1/15.3	24.4	19.8	24.2	12.3	575/3/60	14.7/15	DISCHARGE LW(dB)/RETURN LW(dB)	-/-	-/-	-/-	-/-	-/-	-/-	YORK PREDATOR SERIES	–
RTU02	OFFICE ROOF	EAST OFFICE L2 PERIMETER		194.9	214.0	348.4	3.00	35.2	28.1	15.6	27.8	2	14.2	12.2	23.9/17.0	18.9/14.9	32.4	26.9	24.2	12.4	575/3/60	18.4/20	DISCHARGE LW(dB)/RETURN LW(dB)	-/-	-/-	-/-	-/-	-/-	-/-	YORK PREDATOR SERIES	–
RTU03	OFFICE ROOF	OFFICE L2 INTERIOR		856.6	248.8	291.1	1.50	35.2	29.3	15.6	15.6	2	–	–	–	–	16.7	12.1	25.9	14.2	575/3/60	10.6/15	DISCHARGE LW(dB)/RETURN LW(dB)	-/-	-/-	-/-	-/-	-/-	-/-	YORK PREDATOR SERIES	–
RTU04	OFFICE ROOF	WEST OFFICE L1 PERIMETER		1300.2	248.8	288.7	2.00	35.2	28.1	15.6	33.5	2	9.3	7.3	23.9/17.0	19.6/14.9	24.4	19.8	24.2	11.6	575/3/60	14.7/15	DISCHARGE LW(dB)/RETURN LW(dB)	-/-	-/-	-/-	-/-	-/-	-/-	YORK PREDATOR SERIES	–
RTU05	OFFICE ROOF	WEST OFFICE L1 INTERIOR		566.3	248.8	236.4	1.50	17.6	14.4	15.6	36.6	2	–	–	–	–	12.1	8.2	26.2	14.1	575/3/60	9.8/15	DISCHARGE LW(dB)/RETURN LW(dB)	-/-	-/-	-/-	-/-	-/-	-/-	YORK PREDATOR SERIES	–
RTU06	OFFICE ROOF	MULTIPURPOSE ROOM		1361.6	204.0	248.8	2.00	35.2	28.1	15.6	32.7	2	9.8	7.3	23.9/17.9	21.7/15.9	25.3	19.5	25.1	13.2	575/3/60	14.7/15	DISCHARGE LW(dB)/RETURN LW(dB)	-/-	-/-	-/-	-/-	-/-	-/-	YORK PREDATOR SERIES	–
RTU07	OFFICE ROOF	PREPARATION AREA		424.8	248.8	236.4	1.50	17.6	14.4	15.6	43.6	2	5.4	2.5	23.9/18.6	21.7/15.1	8.9	7.0	26.6	12.9	575/3/60	7.5/15	DISCHARGE LW(dB)/RETURN LW(dB)	-/-	-/-	-/-	-/-	-/-	-/-	YORK PREDATOR SERIES	–
RTU08	OFFICE ROOF	WILL CALL AREA		424.8	248.8	236.4	1.50	17.6	14.4	15.6	43.6	2	5.4	2.5	23.9/18.6	21.7/15.1	8.9	7.0	26.6	12.9	575/3/60	7.5/15	DISCHARGE LW(dB)/RETURN LW(dB)	-/-	-/-	-/-	-/-	-/-	-/-	YORK PREDATOR SERIES	–
RTU09	DRY WAREHOUSE ROOF	LUNCH & BREAK ROOM		755.1	248.8	283.7	1.50	23.4	19.0	15.6	36.4	2	–	–	–	–	16.1	11.4	25.9	13.3	575/3/60	10.6/15	DISCHARGE LW(dB)/RETURN LW(dB)	-/-	-/-	-/-	-/-	-/-	-/-	YORK PREDATOR SERIES	–
RTU10	SHIPPING OFFICE ROOF	SHIPPING OFFICE		424.8	248.8	236.4	1.50	17.6	14.4	15.6	43.6	2	5.4	2.5	23.9/18.6	21.7/15.1	8.9	7.0	26.6	12.9	575/3/60	7.5/15	DISCHARGE LW(dB)/RETURN LW(dB)	-/-	-/-	-/-	-/-	-/-	-/-	YORK PREDATOR SERIES	–

NOTES: 1. FOR DETAILS REFER TO SPECIFICATIONS.
2. MANUFACTURER NAME & MODEL NUMBER REPRESENTS ACCEPTABLE QUALITY STANDARD ONLY. ALTERNATIVE MATERIALS MAY BE APPROVED AFTER REVIEW OF TECHNICAL INFORMATION BY ENGINEER.
3. TYPICAL ENERGY WHEEL CONDITIONS: SUMMER – E.A.T. (°C) SHALL BE 35°C/23.9°C
WINTER – E.A.T. (°C) SHALL BE -27.2°C

XREFS:

Good things come from Sysco®

Client

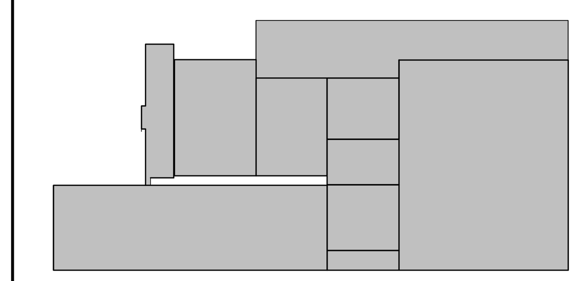

2019/04/26	ISSUED FOR FINAL COORDINATION	4
2019/03/29	ISSUED FOR 90% REVIEW	3
2019/02/15	ISSUED FOR PERMIT	2
2019/01/31	ISSUED FOR 66% REVIEW	1
DATE	REVISION	REF

THE ENGINEER WAIVES ANY AND ALL RESPONSIBILITY AND LIABILITY FOR PROBLEMS WHICH ARISE FROM FAILURE TO FOLLOW THESE PLANS, SPECIFICATIONS AND THE DESIGN INTENT THEY CONVEY, OR FOR PROBLEMS WHICH ARISE FROM OTHER FAILURE TO OBTAIN AND / OR FOLLOW THE ENGINEER'S GUIDANCE WITH RESPECT TO ANY ERRORS, OMISSIONS, INCONSISTENCES, AMBIGUITIES OR CONFLICTS WHICH ARE ALLEGED.

THIS DRAWING IS THE PROPERTY OF GOODKEY WEEDMARK & ASSOCIATES LIMITED AND ALL COPYRIGHTS ARE RESERVED. NO USE OF THIS DRAWING MAY BE MADE WITHOUT EXPRESS WRITTEN CONSENT.

DO NOT SCALE DRAWINGS.

L'INGÉNIEUR DÉCLINE TOUTE RESPONSABILITÉ DÉCOULANT DE PROBLÈMES FAISANT SUITE AU NON RESPECT DES PLANS, DEVIS ET DE L'INTENTION DU CONCEPT QU'ILS INDIQUENT OU DE TOUS LES PROBLÈMES POUVANT RESULTER DU DÉFAUT D'OBTENIR ET / OU DE SUIVRE LES CONSEILS DE L'INGÉNIEUR EN CE QUI CONCERNE LES ERREURS, OMISSIONS, INCONSISTANCES, AMBIGUITÉS OU CONFLITS ALLÉGUÉS.

CE DESSIN EST LA PROPRIÉTÉ LITTÉRAIRE DE GOODKEY WEEDMARK & ASSOCIATES LIMITED ET TOUS LES DROITS SONT RÉSERVÉS. L'UTILISATION EST INTERDITE SANS LE CONSENTEMENT ÉCRIT DE L'AUTEUR.

NE PAS MESURER LES DESSINS A L'ÉCHELLE.

DESIGN BUILDER
CONSTRUCTION (Ontario) LTD.
BBS CONSTRUCTION (ONTARIO) LTD.
1805 WOODWARD DRIVE, OTTAWA, ON K2C 0P9, CANADA
TEL. 613-226-8830 FAX. 613-226-7709

Goodkey Weedmark
Consulting Engineers
GOODKEY WEEDMARK & ASSOCIATES LIMITED
1688 Woodward Dr. 613 727-5111 Voice
Ottawa Ontario 613 727-5115 Fax
Canada K2C 3R8 www.gwal.com Web

Project north
Nord du projet

Seal/Sceau

Project/Projet
SYSCO
2390 Stevenage Drive
Ottawa, Ontario Canada

Drawing title/Titre du dessin
MECHANICAL LEGENDS & SCHEDULES

Scale / Échelle	As indicated	Project no./No. du projet	2018-626
Design by / Conçu par	D.NEWTON	Drawing/Dessin	M0.02
Drawn by / Dessiné par	D.NEWTON		
Reviewed by / Examiné par	Approver		OF
Date / Date	01/30/19	Revision no: 4	Acad file/Fichier:

FILENAME: C:\Users\dnewton\Documents\2018-626 – MECHANICAL v2017_dnewtonLRPYQ.rvt
PLOTDATE: 4/26/2019 10:27:50 PM

PLUMBING FIXTURES

PRODUCT TAG NO	FIXTURE TYPE	LOCATION	MANUFACTURER	MODEL	COLOUR	TRIM MANUFACTURER/MODEL	ACCESSORIES	NOTES
WC1	WALL HUNG WATER CLOSET	WASHROOMS	KOHLER	KINGSTON	WHITE	SLAON SOLIS SOLAR POWERED DUAL FLUSH VALVE MODEL 811-1.6/1.1	KOHLER STRONGHOLD ELONGATED TOILER SEAT	
WC2	WALL HUNG WATER CLOSET	B/F WASHROOMS	KOHLER	KINGSTON	WHITE	SLAON SOLIS SOLAR POWERED DUAL FLUSH VALVE MODEL 811-1.6/1.1	KOHLER STRONGHOLD ELONGATED TOILER SEAT	
U1	WALL MOUNT URINAL	WASHROOMS	KOHLER	DEXTER K5016-ET-0	WHITE	SLAOM SOLAR POWERED FLUSH VALVE MODEL 8180		
L1	COUNTERTOP LAVATORY	WASHROOMS	KOHLER	K-13462			BRASS OFF-SET TRAP W/CLEAN-OUT, BRASS QUARTER TURN STOPS, CHECK STOPS, ESCUTCHEON PLATES & OPEN GRID STRAINER	
L2	WALL HUNG LAVATORY	MEN'S WASHROOMS	KOHLER	K-2301-0			BRASS OFF-SET TRAP W/CLEAN-OUT, BRASS QUARTER TURN STOPS, CHECK STOPS, ESCUTCHEON PLATES & OPEN GRID STRAINER	
SK1	SINGLE BOWL SINK	MULTIPURPOSE ROOM	ELKAY GOURMET	CELEBRITY BCR15		KOHLER CORALIS K15175-FL-CP	BRASS TAILPIECE, PVC P-TRAP W/ CLEAN-OUT, INLINE CHECK STOPS, BRASS QUARTER TURN STOPS	
SK2	DOUBLE BOWL SINK	LUNCH & BREAK ROOM	ELKAY GOURMET	CELEBRITY GECR2521		KOHLER CORALIS K15175-FL-CP	BRASS TAILPIECE, PVC P-TRAP W/ CLEAN-OUT, INLINE CHECK STOPS, BRASS QUARTER TURN STOPS	
SK3	TRIPPLE BOWL SINK	MULTIPURPOSE ROOM					BRASS TAILPIECE, PVC P-TRAP W/ CLEAN-OUT, INLINE CHECK STOPS, BRASS QUARTER TURN STOPS	
DF1	DRINKING FOUNTAIN	OFFICE	ELKAY	EBFATL-8				
EW1	EMERGENCY EYEWASH SHOWER							
HB	HOSE BIBB	AS INDICATED	WATTS	HY420	ALL BRONZE			CONCEALED NON-FREEZE, KEY OPERATED, EXPOSED WALL HYDRANT, INTEGRAL VACUUM BREAKER, 19MM HOSE END, ALL BRONZE HEAD, AND HYDRANT KEY
FD1	HEAVY DUTY FLOOR DRAIN	AS INDICATED	WATTS	FD-200	NICKEL BRONZE		TRAP PRIMER	HEAVY DUTY FLOOR DRAIN, ADJUSTABLE, EPOXY COATED CAST IRON BODY, MEMBRANE CLAMP, 152MM DIAMETER NICKEL BRONZE STRAINER, & TRAP PRIMING CONNECTION
FD2	FUNNEL FLOOR DRAIN	AS INDICATED	WATTS	FD-200-EG	NICKEL BRONZE		TRAP PRIMER	STANDARD DUTY FLOOR DRAIN, ADJUSTABLE, EPOXY COATED CAST IRON BODY, MEMBRANE CLAMP, 125MM DIA ROUND NICKEL BRONZE STRAINER, 100X230MM OVEL FUNNEL & TRAP PRIMING CONNECTION
FD3	HUB FLOOR DRAIN	AS INDICATED	WATTS	FD-200-DD	NICKEL BRONZE		TRAP PRIMER	STANDARD DUTY FLOOR DRAIN, ADJUSTABLE, EPOXY COATED CAST IRON BODY, MEMBRANE CLAMP, 125MM DIA ROUND NICKEL BRONZE HUB & TRAP PRIMING CONNECTION
RD1	ROOF DRAIN	AS INDICATED	WATTS	RD-100				ONE-PIECE, LARGE SUMP ROOF DRAIN; EPOXY COATED CASTR IRON BODY, ELASTOMERIC FLANGE, UNDER DECK CLAMP AND SUMP RECEIVER TO SUIT ROOF CONSTRUCTION, STAINLESS STEEL BALLAST/DIRT GUARD, AND DUCTILE IRON VANDAL PROOF DOME.

GLYCOL FEED STATION SCHEDULE

UNIT NO.	LOCATION	FLUID CAPACITY (L)	FAN DATA		ELECTRICAL DATA		BASIS OF DESIGN	REMARKS
			FLOW (L/s)	HEAD (kPa)	AMPS	V/PH/Hz		
GFS1	SNOW MELT MECHANICAL ROOM	180	0.063	345	0.7	115/1/60	AXIOM SF100	–

NOTES: 1. FOR DETAILS REFER TO SPECIFICATIONS.

GRILLE AND DIFFUSER SCHEDULE

UNIT NO.	TYPE	MODULE (mm)	INLET (mm)	MOUNT	FINISH	BASIS OF DESIGN	REMARKS
SD1	SQUARE PLAQUE DIFFUSER	AS INDICATED	AS INDICATED	WALL	B12	EH PRICE SPD	ADJUSTABLE DOUBLE DEFLECTION
SD2	LINEAR SUPPLY AIR DIFFUSER	1200-2 SLOT	AS INDICATED	CEILING	B12	EH PRICE SDB MODEL 75	1200mm LONGWITH 2 SLOTS
SD3	DRUM DIFFUSER	AS INDICATED	AS INDICATED	DCT	–	EH PRICE HCO	–
SD4	SUPPLY AIR GRILLE	AS INDICATED	AS INDICATED	WALL	B12	EH PRICE 510	–
TG1	TRANSFER AIR GRILLE	AS INDICATED	AS INDICATED	WALL	B12	EH PRICE 520	FIXED LOUVRE 45° DEFLECTION
EG1	EXHAUST AIR GRILLE	AS INDICATED	AS INDICATED	WALL	B12	EH PRICE 530	–
RG1	RETURN AIR GRILLE	AS INDICATED	AS INDICATED	DRYWALL	B12	EH PRICE 80	EGGCRATE RETURN

NOTES: 1. FOR DETAILS REFER TO SPECIFICATIONS.

KITCHEN HOOD SCHEDULE

SECTION	LOCATION	FUNCTION	SIZE (LmmxWmmxHmm)	EXHAUST FLOW (L/s)	EXHAUST COLLAR	BASIS OF DESIGN	REMARKS
RH1	MULTIPURPOSE ROOM	KITCHEN EXHAUST	5842x1448x610	2595	700x225(2NO.)	GREENHECK GXEW-230.00-S	STAINLESS STEEL X-TRACTOR FILTERS
RH2	PREPERATION AREA	DISHWASHER EXHAUST	1778x914x610	235	425x225	GREENHECK GXEW-70.00-S	STAINLESS STEEL X-TRACTOR FILTERS

NOTES: 1. FOR DETAILS REFER TO SPECIFICATIONS.
2. ALTERNATE MANUFACTURES MUST BE APPROVED VIA ADDENDUM.

BACKFLOW PREVENTER SCHEDULE

TAG	LOCATION	FUNCTION	CONNECTION SIZE (mm)	FLOW RATE (L/s)	INLET PRESSURE (kPa)	PRESSURE DROP (kPa)	BASIS OF DESIGN	REMARKS
BFP1	WATER ENTRY	DCW ENTRY	65	–	–	–	WATTS 757 BFG	–
BFP2	WATER ENTRY	DCW ENTRY	50	–	–	–	WATTS 757 BFG	–

NOTES: 1. FOR DETAILS REFER TO SPECIFICATIONS.

GAS PRV SCHEDULE

TAG	LOCATION	FUNCTION	FLOW RATE (m3/H)	INLET PRESSURE @ FULL FLOW kPa(PSI)	INLET PRESSURE @ NO FLOW kPa(PSI)	OUTLET PRESSURE kPa("WC)	RELIEF VALVE PRESSURE SETPOINT kPa("WC)	BASIS OF DESIGN	REMARKS
PRV1	DRY WAREHOUSE	UNIT HEATERS	–	13.8(2)	34.5(5)	1.75(7)	2.49(10)	ITRON B34R SERIES	BLACK SPRING
PRV2	DRY WAREHOUSE	RTU9	–	13.8(2)	34.5(5)	1.75(7)	2.49(10)	ITRON B34R SERIES	BLACK SPRING
PRV3	DRY WAREHOUSE	MUA & UNIT HEATERS	–	13.8(2)	34.5(5)	1.75(7)	2.49(10)	ITRON B34R SERIES	BLACK SPRING
PRV4	EXISTING DRY WAREHOUSE	MUA & UNIT HEATERS	–	13.8(2)	34.5(5)	1.75(7)	2.49(10)	ITRON B34R SERIES	BLACK SPRING
PRV5	EXISTING DRY WAREHOUSE	MUA & UNIT HEATERS	–	13.8(2)	34.5(5)	1.75(7)	2.49(10)	ITRON B34R SERIES	BLACK SPRING
PRV6	EXISTING DRY WAREHOUSE	RTU & UNIT HEATERS	–	13.8(2)	34.5(5)	1.75(7)	2.49(10)	ITRON B34R SERIES	BLACK SPRING
PRV7	OFFICE ROOF	OFFICE RTU'S	–	13.8(2)	34.5(5)	1.75(7)	2.49(10)	ITRON B34R SERIES	BLACK SPRING
PRV8	OFFICE ROOF	OFFICE RTU'S	–	13.8(2)	34.5(5)	1.75(7)	2.49(10)	ITRON B34R SERIES	BLACK SPRING
PRV9	COLD DOCK	UNIT HEATERS	–	13.8(2)	34.5(5)	1.75(7)	2.49(10)	ITRON B34R SERIES	BLACK SPRING

NOTES: 1. FOR DETAILS REFER TO SPECIFICATIONS.
2. GAS PRV'S SHALL BE SELECTED SUCH THAT ACCEPTABLE OUTLET PRESSURE IS MAINTAINED THROUGHOUT ENTIRE OPERATING RANGE (COORDINATE WITH EQUIPMENT SHOP DRAWINGS).

PUMP SCHEDULE

TAG	LOCATION	FUNCTION	TYPE	PUMP DATA				END SUCTION DIFFUSER (YES/NO)	ELECTRICAL DATA		BASIS OF DESIGN	REMARKS
				DESIGN FLOW (L/s)	DESIGN HEAD (kPa)	RPM	MIN. EFFICIENCY (%)		MOTOR SIZE (HP)	V/PH/Hz		
P1	MECHANICAL ROOM	SNOW MELT	INLINE CIRCULATOR	1.83	75	3300	–	–	1	115/1/60	WILO TUP-51.5x30	50% PROPYLENE GLYCOL
P2	MECHANICAL ROOM	SNOW MELT	INLINE CIRCULATOR	1.262	60	3050	–	–	1/2	115/1/60	WILO TUP-51.25x35	50% PROPYLENE GLYCOL
P3	PREPARATION AREA	DHW RECIRC	WET ROTOR	–	–	–	–	–	1/8	115/1/60	ARMSTRONG ASTRO 225SS	BRONZE BODY, 65mm DIA. FLANGED CONNECTIONS

NOTES: 1. FOR DETAILS REFER TO SPECIFICATIONS.

LOUVRE SCHEDULE

TAG	LOCATION	FUNCTION	AIR FLOW (L/s)	SIZE (mm)	FREE AREA (%)	MAXIMUM PRESSURE DROP (Pa)	BASIS OF DESIGN	REMARKS
LV1	MECHANICAL ROOM	OUTSIDE AIR INTAKE	2360	2100x800			EH PRICE DE 635	35° BLADE ANGLE. 150mm WIDE LOUVRE.
LV2	VAULT	OUTSIDE AIR INTAKE	6136	2400x1600			EH PRICE DE 635	35° BLADE ANGLE. 150mm WIDE LOUVRE.
LV3	ELECTRICAL ROOM	OUTSIDE AIR INTAKE	–	1800x1800			EH PRICE DE 635	35° BLADE ANGLE. 150mm WIDE LOUVRE.
LV4	PUMP ROOM	OUTSIDE AIR INTAKE	1888	1800x1200			EH PRICE DE 635	35° BLADE ANGLE. 150mm WIDE LOUVRE.

NOTES: 1. FOR DETAILS REFER TO SPECIFICATIONS.

GREASE INTERCEPTOR SCHEDULE

TAG	LOCATION	FUNCTION	FOW RATE (L/s)	INLET (ømm)	OUTLET (ømm)	LENGTH (mm)	WIDTH (mm)	HEIGHT (mm)	BASIS OF DESIGN	REMARKS
GI1	PREPARATION AREA	KITCHEN GREASE	12.62	100	100	1016	711	991	WATTS WD-200-B-E-HDC-3	FLANGE & CLAMP DEVICES, BOLT ON EXTENSION & STAINLESS STEEL

NOTES: 1. FOR DETAILS REFER TO SPECIFICATIONS.

BOILER SCHEDULE

TAG	LOCATION	FLOW (L/s)	DELTA TEMP. (°C)	PRESSURE DROP (kPa)	INPUT (kW)	OUTPUT (kW)	EFFICIENCY (%)	TYPE	POWER (W)	V/PH/Hz	BASIS OF DESIGN	REMARKS
B1	MECHANICAL ROOM	2.83	4.4	–	117	112	96	CONDENSING	190	115/1/60	IBC SL 40-399G3	MDULATING BURNER. E-POWER
B2	MECHANICAL ROOM	2.83	4.4	–	117	112	96	CONDENSING	190	115/1/60	IBC SL 40-399G3	MDULATING BURNER. E-POWER

NOTES: 1. FOR DETAILS REFER TO SPECIFICATIONS.
2. MANUFACTURER NAME & MODEL NUMBER REPRESENT ACCEPTABLE QUALITY STANDARD ONLY.
3. ALTERNATIVE MATERIALS MAY BE APPROVED AFTER REVIEW OF TECHNICAL INFORMATION BY ENGINEER.

EXPANSION TANK SCHEDULE

TAG	LOCATION	FUNCTION	TYPE (DIAPHRAGM/ BLADDER)	OPERATING PRESSURE		OPERATING TEMPERATURE		TANK VOLUME (L)	ACCEPTANCE VOLUME (L)	ORIENTATION (HORIZONTAL/ VERTICAL)	BASIS OF DESIGN	REMARKS
				MIN (kPa)	MAX (kPa)	MIN (°C)	MAX (°C)					
ET1	DRY WAREHOUSE	SNOW MELT LOOP	BLADDER	–	689	–	115	121	43	VERTICAL	AMTROL EXTROL SX-60V	–
ET2	PREPARATION AREA	OFFICE DOMESTIC HOT WATER	BLADDER	–	–	–	–	–	–	VERTICAL	EXPANFLEX BFA42	–
ET3	SOS ROOM	LOCKER DOMESTIC HOT WATER	BLADDER	–	–	–	–	–	–	VERTICAL	AMTROL EXTROL 600-L	–

NOTES: 1. FOR DETAILS REFER TO SPECIFICATIONS.
2. PRE-CHARGE PRESSURE TO BE EQUIVALENT TO MINIMUM OPERATING PRESSURE.

UNIT HEATER SCHEDULE

TAG	LOCATION	AIR FLOW (L/s)	INPUT (kW)	OUTPUT (kW)	ELECTRICAL DATA			CABINET ARRANGEMENT	BASIS OF DESIGN	REMARKS
					FAN RPM	MOTOR SIZE (HP)	V/PH/Hz			
UH1	REFER TO DRAWINGS	215	8.8	7.2	1550	1/4	115/1/60	CEILING MOUNTED	REZNOR EDAS30	C/W CONCENTRIC VENT
UH2	REFER TO DRAWINGS	363	17.6	14.6	1550	1/4	115/1/60	CEILING MOUNTED	REZNOR EDAS60	C/W CONCENTRIC VENT

NOTES: 1. FOR DETAILS REFER TO SPECIFICATIONS.
2. DESIGN BASED ON 35% PROPYLENE GLYCOL.

NATURAL GAS DOMESTIC WATER HEATER SCHEDULE

TAG	LOCATION	INPUT (kW)	EFFICIENCY (%)	STORAGE CAPACITY (L)	RECOVERY RATE (L/H) @ 37.8°C	MAX. GAS INLET PRESSURE (kPa)	ELECTRICAL DATA		BASIS OF DESIGN	REMARKS
							MOP	V/PH/Hz		
DHWT1	MECHANICAL ROOM	36.6	96	246	522	–	15	115/1/60	LOCHINVAR SNR126-065	MOD BURNER 5:1, S/S HX, 160PSI WP, DIRECT VENT SEALED COMBUSTION, ELECTRONIC CONTROLS, DIRECT SPARK IGNITION, T&P RELIEF, VERTICAL CONCENTRIC VENT KIT & NEUTRALIZING KIT.

NOTES: 1. FOR DETAILS REFER TO SPECIFICATIONS.

ELECTRIC DOMESTIC WATER HEATER SCHEDULE

TAG	LOCATION	INPUT (kW)	STORAGE CAPACITY (L)	RECOVERY RATE (L/H) @ 56°C	ELECTRICAL DATA		BASIS OF DESIGN	REMARKS
					AMPS	V/PH/Hz		
DHWT2	LOCKER ROOM	4.5	113.6	49	21.6	208/1/60	RHEEM EGSP30	–
DHWT3	LUNCH & BREAK ROOM	3	22.8	34	14.4	208/1/60	RHEEM EGSP6	
DHWT4	SHIPPING OFFICE	3	37.9	34	14.4	208/1/60	RHEEM EGSP10	
DHWT5	MECHANICAL ROOM	3	37.9	34	14.4	208/1/60	RHEEM EGSP10	

NOTES: 1. FOR DETAILS REFER TO SPECIFICATIONS.
2. MANUFACTURER NAME & MODEL NUMBER REPRESENT ACCEPTABLE QUALITY STANDARD ONLY.
3. ALTERNATIVE MATERIALS MAY BE APPROVED AFTER REVIEW OF TECHNICAL INFORMATION BY ENGINEER.

XREFS:

Good things come from Sysco®

Client

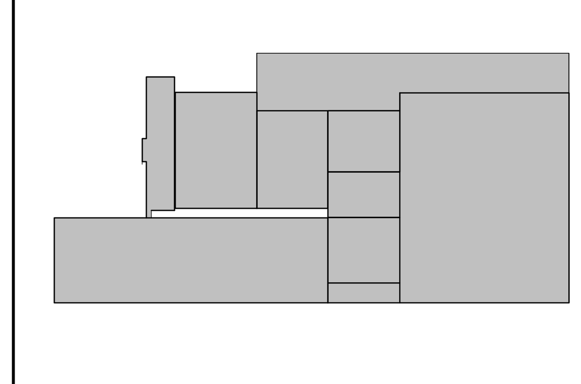

DATE	REVISION	REF
2019/04/26	ISSUED FOR FINAL COORDINATION	4
2019/03/29	ISSUED FOR 90% REVIEW	3
2019/02/15	ISSUED FOR PERMIT	2
2019/01/31	ISSUED FOR 66% REVIEW	1

THE ENGINEER WAIVES ANY AND ALL RESPONSIBILITY AND LIABILITY FOR PROBLEMS WHICH ARISE FROM FAILURE TO FOLLOW THESE PLANS, SPECIFICATIONS AND THE DESIGN INTENT THEY CONVEY, OR FOR PROBLEMS WHICH ARISE FROM OTHER FAILURE TO OBTAIN AND / OR FOLLOW THE ENGINEER'S GUIDANCE WITH RESPECT TO ANY ERRORS, OMISSIONS, INCONSISTENCES, AMBIGUITIES OR CONFLICTS WHICH ARE ALLEGED.

THIS DRAWING IS THE PROPERTY OF GOODKEY WEEDMARK & ASSOCIATES LIMITED AND ALL COPYRIGHTS ARE RESERVED. NO USE OF THIS DRAWING MAY BE MADE WITHOUT EXPRESS WRITTEN CONSENT.

DO NOT SCALE DRAWINGS.

L'INGÉNIEUR DÉCLINE TOUTE RESPONSABILITÉ DÉCOULANT DE PROBLÈMES FAISANT SUITE AU NON RESPECT DES PLANS, DEVIS ET DE L'INTENTION DU CONCEPT QU'ILS INDIQUENT OU DE TOUS LES PROBLÈMES POUVANT RESULTER DU DÉFAUT D'OBTENIR ET / OU DE SUIVRE LES CONSEILS DE L'INGÉNIEUR EN CE QUI CONCERNE LES ERREURS, OMISSIONS, INCONSISTANCES, AMBIGUITÉS OU CONFLITS ALLÈGUÉS.

CE DESSIN EST LA PROPRIÉTÉ LITTÉRAIRE DE GOODKEY WEEDMARK & ASSOCIATES LIMITED ET TOUS LES DROITS SONT RÉSERVÉS. L'UTILISATION EST INTERDITE SANS LE CONSENTEMENT ÉCRIT DE L'AUTEUR.

NE PAS MESURER LES DESSINS A L'ÉCHELLE.

DESIGN BUILDER
CONSTRUCTION (Ontario) LTD.

BBS CONSTRUCTION (ONTARIO) LTD.
1805 WOODWARD DRIVE, OTTAWA, ON K2C 0P9, CANADA
TEL. 613-226-8830 FAX. 613-226-7709

Goodkey Weedmark
Consulting Engineers

GOODKEY WEEDMARK & ASSOCIATES LIMITED
1688 Woodward Dr. 613 727-5111 Voice
Ottawa Ontario 613 727-5115 Fax
Canada K2C 3R8 www.gwal.com Web

Project north / Nord du projet

Seal/Sceau

Project/Projet
SYSCO
2390 Stevenage Drive
Ottawa, Ontario Canada

Drawing title/Titre du dessin
MECHANICAL SCHEDULES

Scale / Échelle	1 : 2800	Project no./No. du projet	2018-626
Design by / Conçu par	Designer	Drawing/Dessin	M0.03
Drawn by / Dessiné par	Author		
Reviewed by / Examiné par	Approver		OF
Date / Date	01/30/19	Revision no: 4	Acad file/Fichier:

FILENAME: C:\Users\dnewton\Documents\2018-626 - MECHANICAL v2017_dnewtonLRPYQ.rvt
PLOTDATE: 4/26/2019 10:27:53 PM

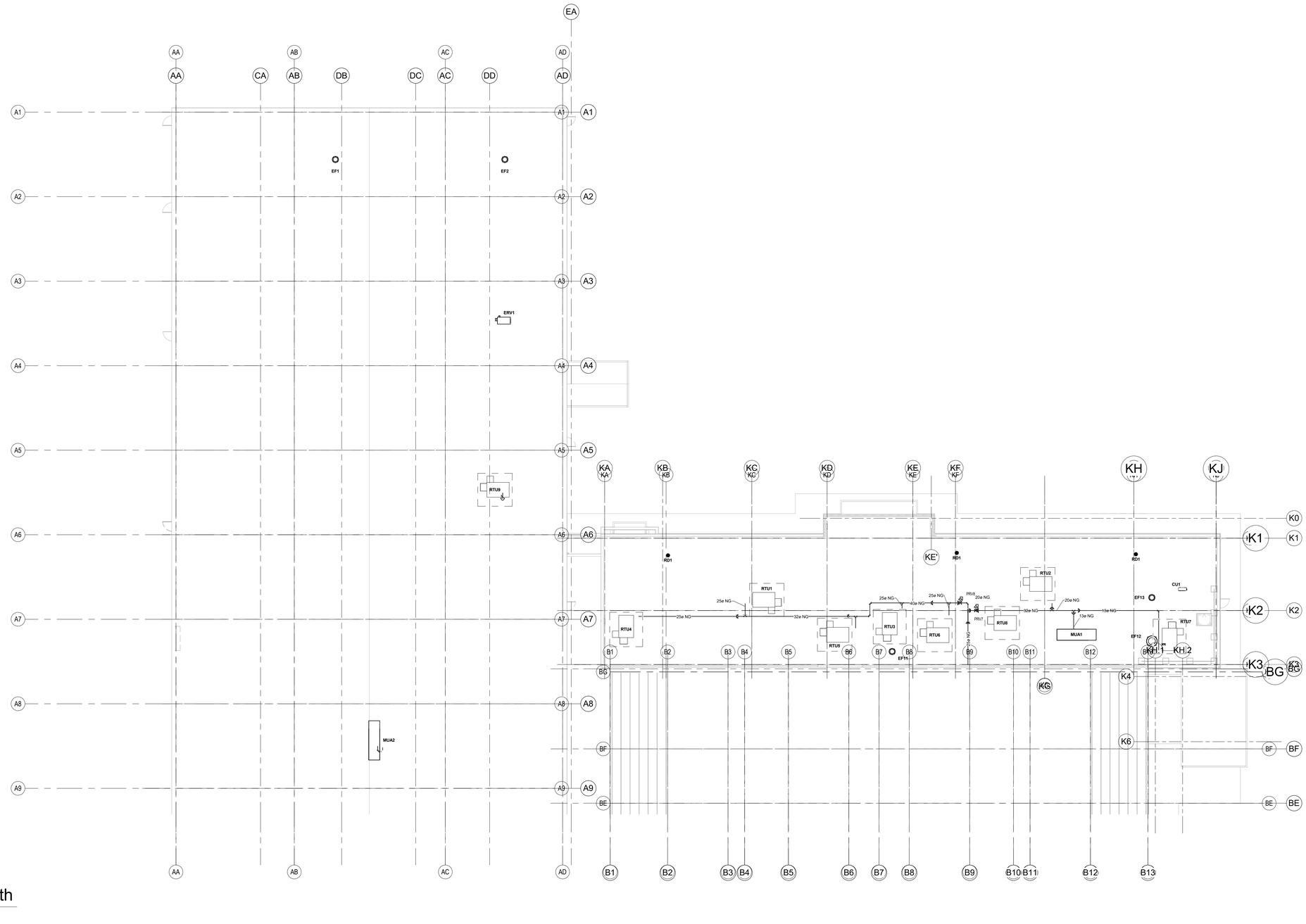

1
M4.06

Roof Plan - North

1 : 200

Good things come from Sysco®

Client

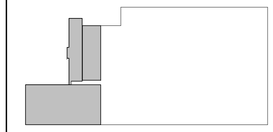

DATE	REVISION	REF
2019/04/26	ISSUED FOR FINAL COORDINATION	4
2019/03/29	ISSUED FOR 90% REVIEW	3
2019/02/15	ISSUED FOR PERMIT	2
2019/01/31	ISSUED FOR 66% REVIEW	1

THE ENGINEER WAIVES ANY AND ALL RESPONSIBILITY AND LIABILITY FOR PROBLEMS WHICH ARISE FROM FAILURE TO FOLLOW THESE PLANS, SPECIFICATIONS AND THE DESIGN INTENT THEY CONVEY, OR FOR PROBLEMS WHICH ARISE FROM OTHER FAILURE TO OBTAIN AND / OR FOLLOW THE ENGINEER'S GUIDANCE WITH RESPECT TO ANY ERRORS, OMISSIONS, INCONSISTENCES, AMBIGUITIES OR CONFLICTS WHICH ARE ALLEGED.

THIS DRAWING IS THE PROPERTY OF GOODKEY WEEDMARK & ASSOCIATES LIMITED AND ALL COPYRIGHTS ARE RESERVED. NO USE OF THIS DRAWING MAY BE MADE WITHOUT EXPRESS WRITTEN CONSENT.

DO NOT SCALE DRAWINGS.

L'INGENIEUR DECLINE TOUTE RESPONSABILITE DECOULANT DE PROBLEMES FAISANT SUITE AU NON RESPECT DES PLANS, DEVIS ET DE L'INTENTION DU CONCEPT QU'ILS INDIQUENT OU DE TOUS LES PROBLEMES PRIVANT RESULTER DU DEFAUT D'OBTENIR ET / OU DE SUIVRE LES CONSEILS DE L'INGENIEUR EN CE QUI CONCERNE LES ERREURS, OMISSIONS, INCONSISTANCES, AMBIGUITES OU CONFLITS ALLEGUES.

CE DESSIN EST LA PROPRIETE LITTERAIRE DE GOODKEY WEEDMARK & ASSOCIATES LIMITED ET TOUS LES DROITS SONT RESERVES. L'UTILISATION EST INTERDITE SANS LE CONSENTEMENT ECRIT DE L'AUTEUR.

NE PAS MESURER LES DESSINS A L'ECHELLE.

DESIGN BUILDER
BBS CONSTRUCTION (Ontario) LTD.

BBS CONSTRUCTION (ONTARIO) LTD.
1805 WOODWARD DRIVE, OTTAWA, ON K2C 0P9, CANADA
TEL. 613-226-8830 FAX. 613-226-7709

Goodkey Weedmark
Consulting Engineers

GOODKEY WEEDMARK & ASSOCIATES LIMITED
1688 Woodward Dr, Ottawa Ontario Canada K2C 3R8
613 727-5111 Voice
613 727-5115 Fax
www.gwal.com Web

Project north / Nord du projet | Grid/Sceau

Project/Projet
SYSCO
2390 Stevenage Drive
Ottawa, Ontario Canada

Drawing title/Titre du dessin
PARTIAL ROOF PLAN - NORTH/OFFICE

Scale / Echelle: As indicated	Project no./No. du projet: 2018-626
Design by / Conçu par: D.NEWTON	Drawing/Dessin: M4.06
Drawn by / Dessiné par: D.NEWTON	
Reviewed by / Examiné par: Approver	
Date: 01/08/19	Revision no: 4 / Scale file/Fichier:

Issued: C:\Users\dnewton\Documents\2018-626 MECHANICAL 2017_dnewton.RVT 4/26/2019 10:20:07 PM

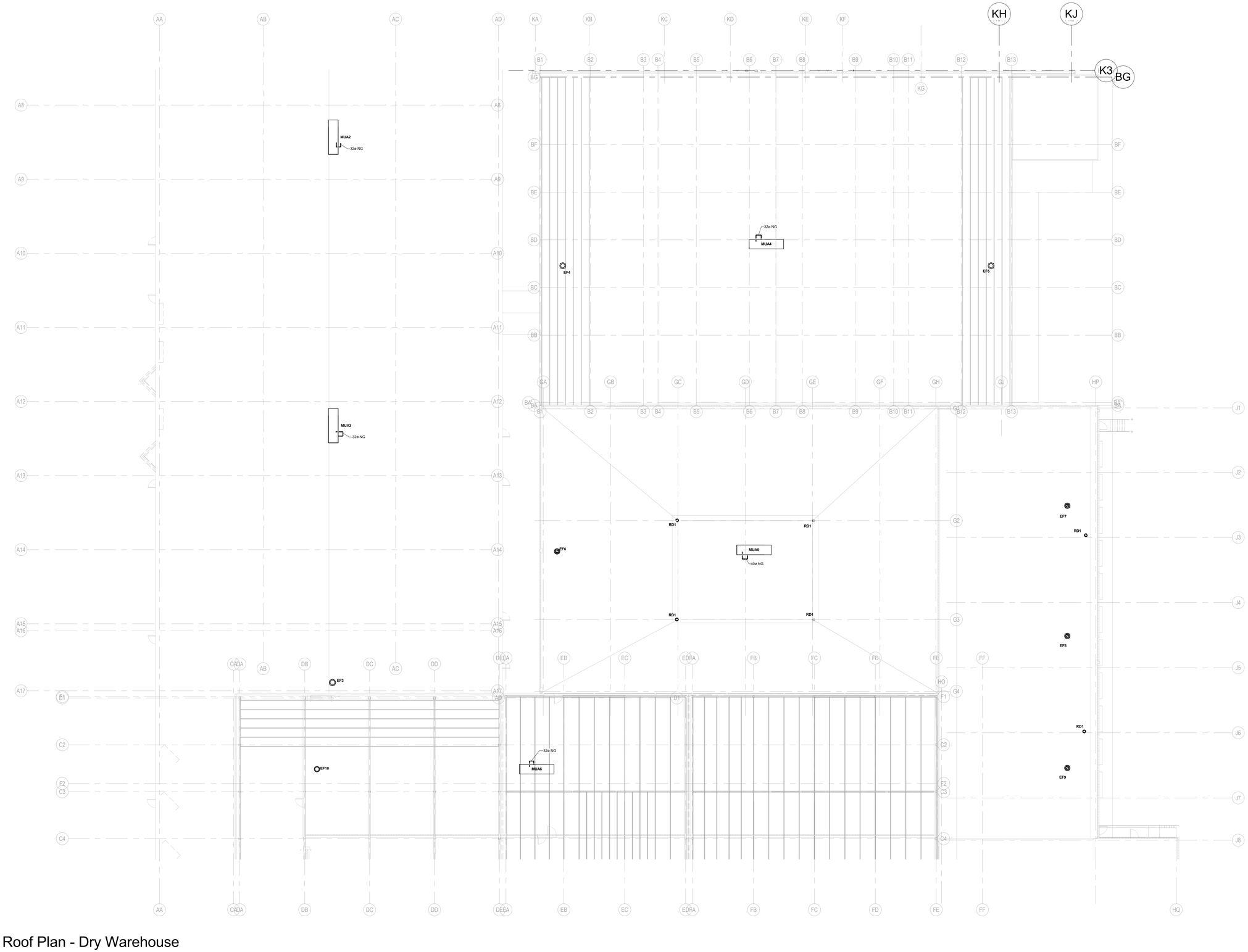

1
M4.07

Roof Plan - Dry Warehouse

1 : 200

Good things come from Sysco®

Client

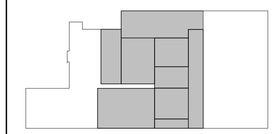

DATE	REVISION	REF.
2019/04/26	ISSUED FOR FINAL COORDINATION	4.
2019/03/29	ISSUED FOR 90% REVIEW	3.
2019/02/15	ISSUED FOR PERMIT	2.
2019/01/31	ISSUED FOR 66% REVIEW	1.

THE ENGINEER WAIVES ANY AND ALL RESPONSIBILITY AND LIABILITY FOR PROBLEMS WHICH ARISE FROM FAILURE TO FOLLOW THESE PLANS, SPECIFICATIONS AND THE DESIGN INTENT THEY CONVEY, OR FOR PROBLEMS WHICH ARISE FROM OTHER FAILURE TO OBTAIN AND / OR FOLLOW THE ENGINEER'S GUIDANCE WITH RESPECT TO ANY ERRORS, OMISSIONS, INCONSISTENCES, AMBIGUITIES OR CONFLICTS WHICH ARE ALLEGED.

THIS DRAWING IS THE PROPERTY OF GOODKEY WEEDMARK & ASSOCIATES LIMITED AND ALL COPYRIGHTS ARE RESERVED. NO USE OF THIS DRAWING MAY BE MADE WITHOUT EXPRESS WRITTEN CONSENT.

DO NOT SCALE DRAWINGS.

L'INGENIEUR DECLINE TOUTE RESPONSABILITE DECOULANT DE PROBLEMES FAISANT SUITE AU NON RESPECT DES PLANS, DEVIS ET DE L'INTENTION DU CONCEPT QU'ILS INDIQUENT OU DE TOUS LES PROBLEMES PRIVANT RESULTER DU DEFAUT D'OBTENIR ET / OU DE SUIVRE LES CONSEILS DE L'INGENIEUR EN CE QUI CONCERNE LES ERREURS, OMISSIONS, INCONSISTANCES, AMBIGUITES OU CONFLITS ALLEGUES.

CE DESSIN EST LA PROPRIETE LITTERAIRE DE GOODKEY WEEDMARK & ASSOCIATES LIMITED ET TOUS LES DROITS SONT RESERVES. L'UTILISATION EST INTERDITE SANS LE CONSENTEMENT ECRIT DE L'AUTEUR.

NE PAS MESURER LES DESSINS A L'ECHELLE.

DESIGN BUILDER
BBS CONSTRUCTION (Ontario) LTD.

BBS CONSTRUCTION (ONTARIO) LTD.
1805 WOODWARD DRIVE, OTTAWA, ON K2C 0P9, CANADA
TEL. 613-226-8830 FAX. 613-226-7709

Goodkey Weedmark
Consulting Engineers

GOODKEY WEEDMARK & ASSOCIATES LIMITED
1688 Woodward Dr. — 613 727-5111 Voice
Ottawa Ontario — 613 727-5115 Fax
Canada K2C 3R8 — www.gwal.com Web

Project north / Nord du projet

Seal/Sceau

Project/Projet

SYSCO
2390 Stevenage Drive
Ottawa, Ontario Canada

Drawing title/titre du dessin

PARTIAL ROOF PLAN - WAREHOUSE/DOCK

Scale / Echelle: As indicated	Project no./No. du projet: 2018-626
Design by / Conçu par: D.NEWTON	Drawing/Dessin: M4.07
Drawn by / Dessiné par: D.NEWTON	
Reviewed by / Examiné par: Approver	
Date / Date: 01/08/19	Revision no: 4 — Acad. file/Fichier:

TEMPLATE: C:\Users\dnewton\Documents\2018-626 MECHANICAL V2017_dnewton.dwt 4/26/2019 10:29:13 PM

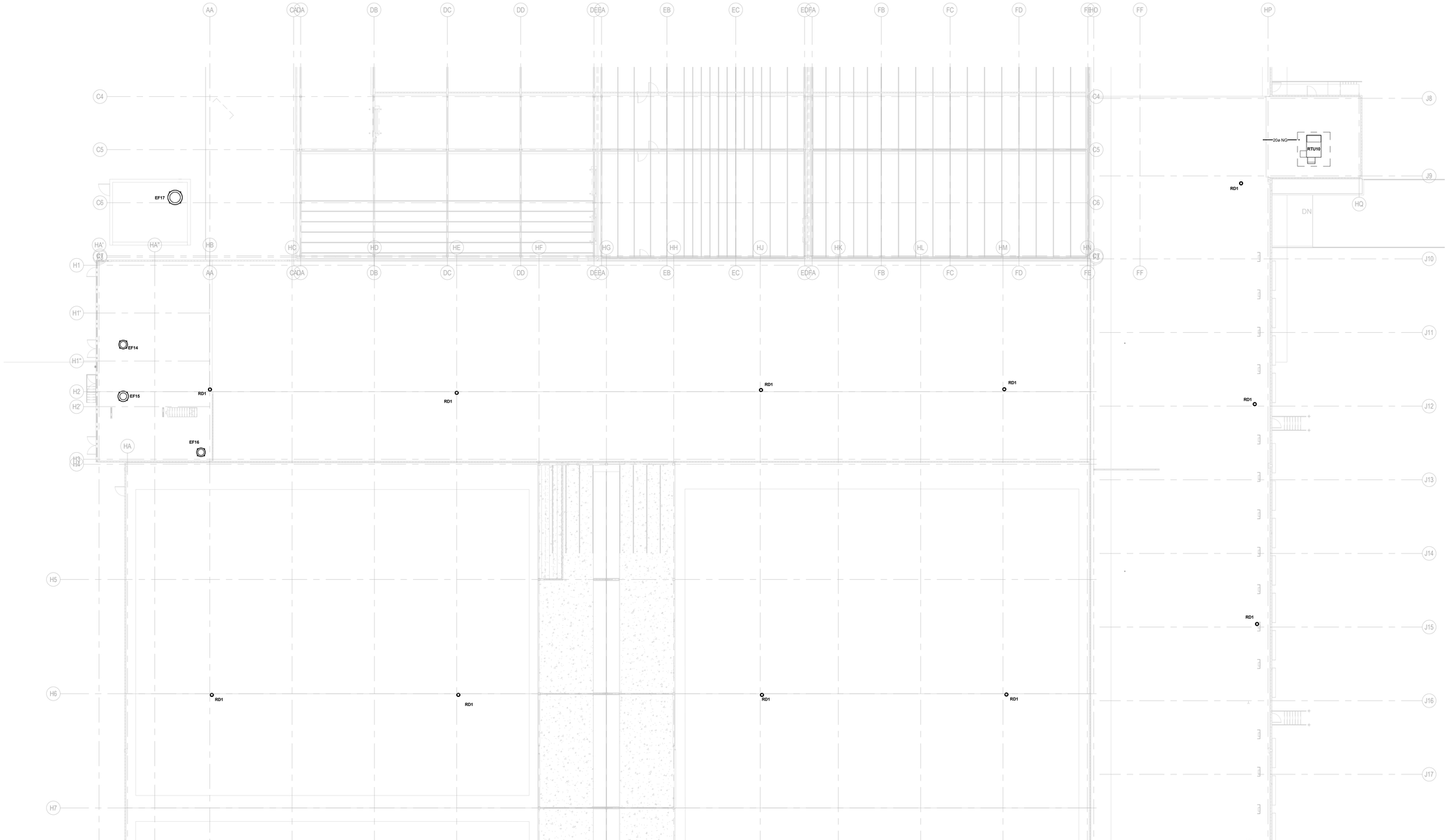

1
M4.08
Roof Plan - South
1 : 200

Good things come from Sysco®

Client

2019/04/26	ISSUED FOR FINAL COORDINATION	4
2019/03/29	ISSUED FOR 90% REVIEW	3
2019/02/15	ISSUED FOR PERMIT	2
2019/01/31	ISSUED FOR 66% REVIEW	1
DATE	REVISION	REF.

THE ENGINEER WAIVES ANY AND ALL RESPONSIBILITY AND LIABILITY FOR PROBLEMS WHICH ARISE FROM FAILURE TO FOLLOW THESE PLANS, SPECIFICATIONS AND THE DESIGN INTENT THEY CONVEY, OR FOR PROBLEMS WHICH ARISE FROM OTHER FAILURE TO OBTAIN AND / OR FOLLOW THE ENGINEER'S GUIDANCE WITH RESPECT TO ANY ERRORS, OMISSIONS, INCONSISTENCES, AMBIGUITIES OR CONFLICTS WHICH ARE ALLEGED.

THIS DRAWING IS THE PROPERTY OF GOODKEY WEEDMARK & ASSOCIATES LIMITED AND ALL COPYRIGHTS ARE RESERVED. NO USE OF THIS DRAWING MAY BE MADE WITHOUT EXPRESS WRITTEN CONSENT.

DO NOT SCALE DRAWINGS.

L'INGÉNIEUR DÉCLINE TOUTE RESPONSABILITÉ DÉCOULANT DE PROBLÈMES FAISANT SUITE AU NON RESPECT DES PLANS, DEVIS ET DE L'INTENTION DU CONCEPT QU'ILS INDIQUENT OU DE TOUS LES PROBLÈMES PRIVANT RÉSULTER DU DÉFAUT D'OBTENIR ET / OU DE SUIVRE LES CONSEILS DE L'INGÉNIEUR EN CE QUI CONCERNE LES ERREURS, OMISSIONS, INCONSISTANCES, AMBIGUÏTÉS OU CONFLITS ALLÉGUÉS.

CE DESSIN EST LA PROPRIÉTÉ LITTÉRAIRE DE GOODKEY WEEDMARK & ASSOCIATES LIMITED ET TOUS LES DROITS SONT RÉSERVÉS. L'UTILISATION EST INTERDITE SANS LE CONSENTEMENT ÉCRIT DE L'AUTEUR.

NE PAS MESURER LES DESSINS À L'ÉCHELLE.

DESIGN BUILDER
BBS CONSTRUCTION (Ontario) LTD.

BBS CONSTRUCTION (ONTARIO) LTD.
1805 WOODWARD DRIVE, OTTAWA, ON K2C 0P9, CANADA
TEL. 613-226-8830 FAX. 613-226-7709

Goodkey Weedmark
Consulting Engineers

GOODKEY WEEDMARK & ASSOCIATES LIMITED
1688 Woodward Dr. 613 727-5111 Voice
Ottawa Ontario 613 727-5115 Fax
Canada K2C 3R8 www.gwal.com Web

Project north
Nord du projet

Seal/Sceau

Project/Projet
SYSCO
2390 Stevenage Drive
Ottawa, Ontario Canada

Drawing title/titre du dessin
PARTIAL ROOF PLAN - SOUTH

Scale/Échelle: As indicated	Project no./No. du projet: 2018-626
Design by/Conçu par: D.NEWTON	Drawing/Dessin: M4.08
Drawn by/Dessiné par: D.NEWTON	
Reviewed by/Vérifié par: Approver	
Date: 01/08/19	Revision no.: 4 / Acad. file/Fichier:

DATE: 4/26/2019 10:29:22 PM
FILNAME: C:\Users\dnewton\Documents\2018-626 MECHANICAL V2017_breakout.RFT\M4.08

DG-115-H20

Unit Performance

Design Conditions

Elevation (ft)	Summer		Winter (°F)	Supply (CFM)	Outdoor Air (CFM)
	DB (°F)	WB (°F)			
374	87.1	73.5	-12.0	6,000	6,000

Unit Specifications

Qty	Weight (lb)	Cooling Type	Heating Type	Unit Installation	Unit ETL Listing
1	826 (+/- 5%)	None	Direct Gas-Fired	Outdoor/Indoor	ANSI Z83.4 / CSA 3.7

Configuration

Unit Orientation	Unit Configuration	Outdoor Air Intake	Return Air Intake	Supply Air Discharge
Horizontal	Constant Volume 100% OA	End	-	Bottom

Heating Specifications

Type	Gas Type	Gas Pressure		Capacity (MBH)		Temperature Rise (°F)	Performance	
		Min (in. wg)	Max (Psi)	Input	Output		EAT (°F)	LAT (°F)
Direct Gas	Natural	8	0.5	471.9	434.2	67.0	-12.0	55.0

Air Performance

Type	Total Volume (CFM)	External SP (in. wg)	Total SP (in. wg)	RPM	Operating Power (hp)	Fan			
						Qty	Type	Size (in.)	Drive-Type
Supply	6,000	1	2.149	1115	5.03	1	Forward Curve	15	Belt-Drive

Motor Specifications

Motor	Qty	Size (hp)	Enclosure	Efficiency	RPM
Supply Fan Motor	1	7-1/2	ODP	NEMA Premium	1725

Electrical Specifications

Power Supply	Rating (V/C/P)	MCA (A)	MOP (A)
Unit	575/60/3	12	20

CONSTRUCTION FEATURES AND ACCESSORIES

Unit	
Unit Installation - Indoor or Outdoor	Std
Unit Construction - Double Wall	X
Wall Insulation - 1in. fiberglass - Heat source on	X
Base Insulation - 1in. fiberglass - entire unit base pan	Std
Corrosion Resistant Fasteners	Std
Access and Connections - Right side when facing intake	X
Service Access - Removable lift off panels	X
Unit Finish - Permatector ASTM B117 salt spray 2500 hours	X
Finish Color - Concrete Gray (RAL 7023)	X
Supply Fan - Belt-drive, forward-curved	X
Supply Fan and Motor Vibration isolation - Neoprene	X
Controls	
Unit Controls - Terminal strip with remote panel	X
Remote Panel - Industrial (NEMA-1)	X
Temperature Control - Discharge control	X
Supply Fan VFD - VFD by factory	X
Supply Fan Control - Constant Volume	X
Melink/Vari-Flow wiring package	
Recirculation Control	
Unoccupied Mode (Night Setback)	
Control Accessories	
Heating Inlet Air Sensor	X
Cooling Inlet Air Sensor	
Dirty Filter Switch	X
Fire Stat Type III (Ships loose)	
120V/24V Smoke Detector (Ships loose)	
Inlet Damper End Switch	
External Cooling Lockout Relay	
Freeze Protection (Supply Air Low Limit)	X
Auxiliary Supply Starter Contacts	
Auxiliary Exhaust Starter Contacts	
Airflow Proving Monitoring Contact	

Accessories	
Factory Installed, Lockable, NEMA 3R Disconnect	Std
Weatherhood - Aluminum Mesh filtered	X
Supply Air Filters	
Outdoor Air Inlet Damper	
Supply Air Outlet Damper - Insulated, low leakage	X
Diffuser	
Roof Curb - GPI	X
Combination Curb	
Spare Belts	
Spare Filters	
Motor with Shaft Grounding	
Service Outlet - Shipped loose	X
Gas Heating Accessories	
Pilot Ignition	Std
Flame Sensing - Flame rod	X
Flame Safeguard Display	
Agency Approval - ETL and IRI	Std
FM Approved	X
Minnesota Code Requirements	
High Gas Pressure Switch	
Low Gas Pressure Switch	
Visual Indication Valves	
External Gas Pressure Regulator (Ships loose)	
Warranty Options	
Unit Warranty - 1 Year	X
5 Year Burner Warranty	
10 Year Burner Warranty	

Standard Option	Std
Not Included	
Included	X

Fan Charts And Performance

Supply Fan Performance

Total Volume (CFM)	External SP (in. wg)	Total SP (in. wg)	RPM	Operating Power (hp)	Motor		Fan		
					Qty	Size (hp)	Qty	Type	Drive-Type
6,000	1	2.149	1115	5.03	1	7-1/2	1	Forward Curve	Belt

Pressure Drop (in. wg)

Weatherhood	Filter	Damper	Cooling	Heating	External	Total
0.334	-	0.19	-	0.625	1	2.149

Sound Performance in Accordance with AMCA

Sound Power by Octave Band								Lwa	dBA	Sones
62.5	125	250	500	1000	2000	4000	8000			
104	96	85	85	82	80	78	70	89	78	31

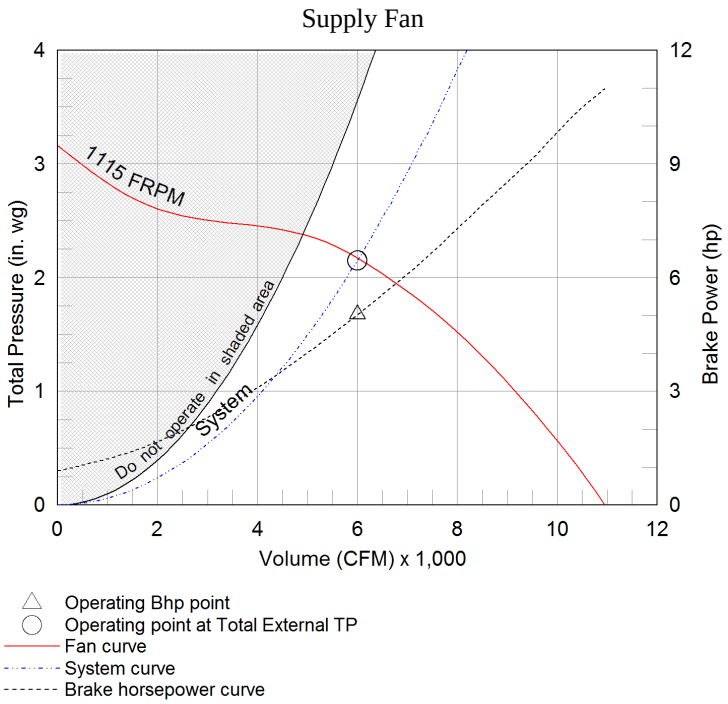

Heating Specifications

Heating Performance								
Type	Gas Type	Gas Pressure		Capacity (MBH)		Temperature Rise (°F)	Performance	
		Min (in. wg)	Max (Psi)	Input	Output		EAT (°F)	LAT (°F)
Direct Gas	Natural	8	0.5	471.9	434.2	67.0	-12.0	55.0

Gas Train Details								
Redundant Main Valves	Electronic Modulating Valve	Pilot Valve	Internal Regulator	Visual Indication Valve	Proof of Closure Valve	Hydraulic Main Valve(s)	Gas Pressure Switch(es)	External Regulator
Std	Std	Std	Std	-	-	-	-	-

Additional Heating Information							
Agency Approvals			Temperature Control	Flame Sensing	Ignition Control	CO2 Sensor	Flame Safeguard Display
ETL and IRI	FM Approved	Minnesota Code					
Std	Yes	-	Discharge	Flame Rod	Pilot	-	-

Unit Details
92% thermal efficiency
Cast aluminum burner manifold with stainless steel mixing plates
Electronic modulation burner control

10 second pre-purge sequence
Low fire start

Gas Connections

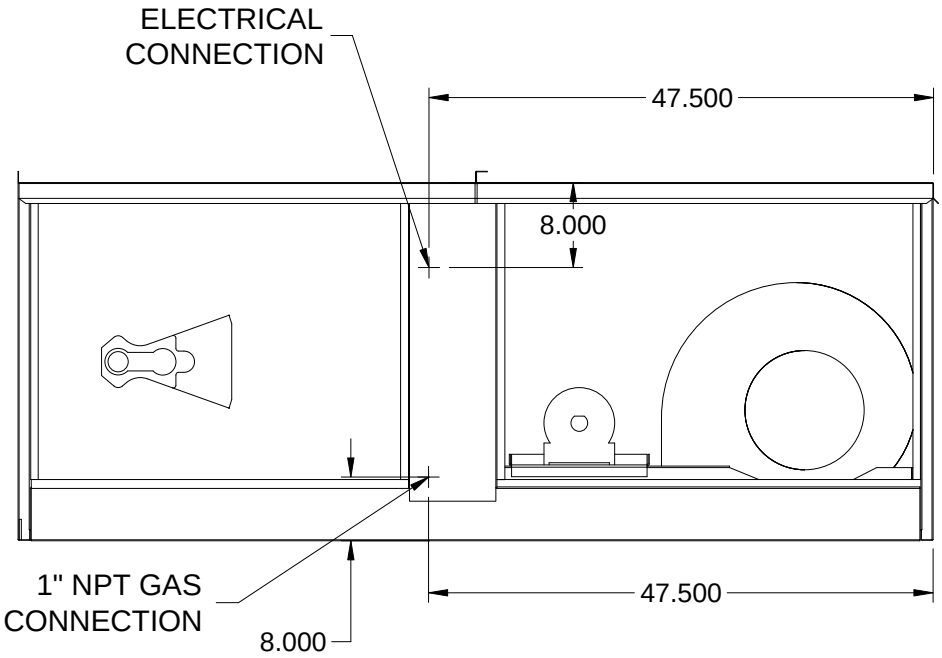

ELEVATION VIEW

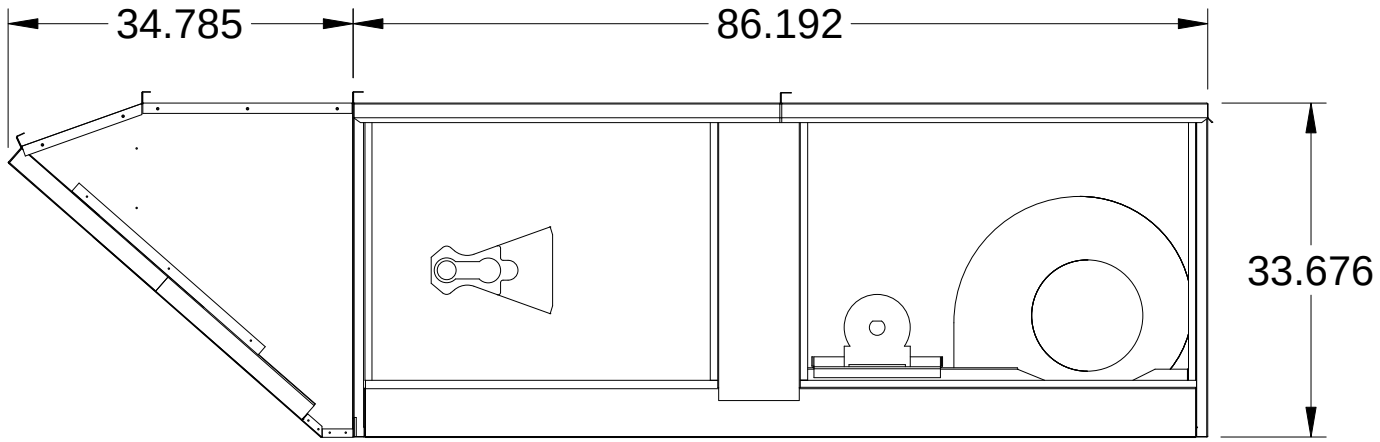

Notes - Elevation View
Standard configuration for unit access is on the right-hand side, when looking into the unit intake in the direction of airflow.
Order of unit sections is from intake of unit to discharge of unit.
Sections included on this unit: Weatherhood Section, Heating Section
Insulation: Double Wall, from Burner Section through end of unit.

PLAN VIEW

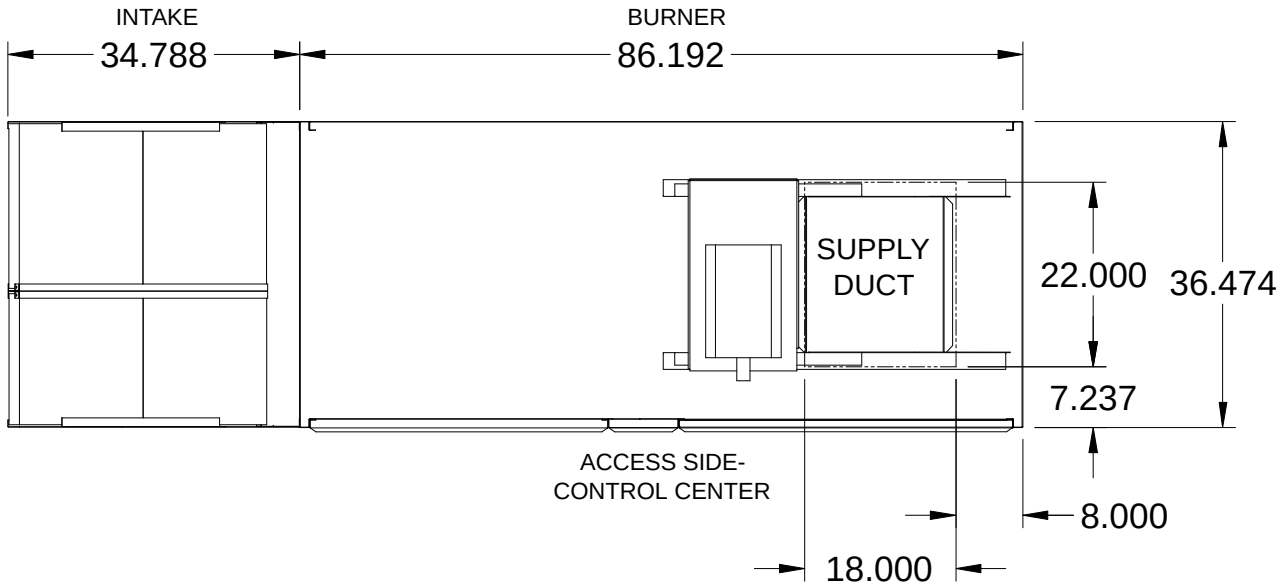

Notes - Plan View
Standard configuration for unit access is on the right-hand side, when looking into the unit intake in the direction of airflow.

END VIEW

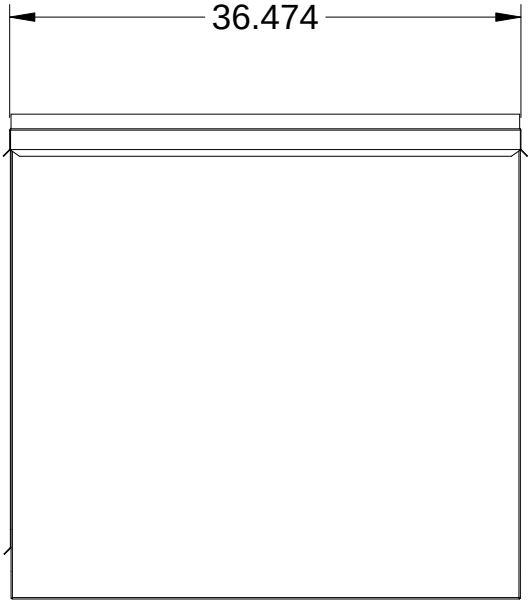

FOOTPRINT VIEW

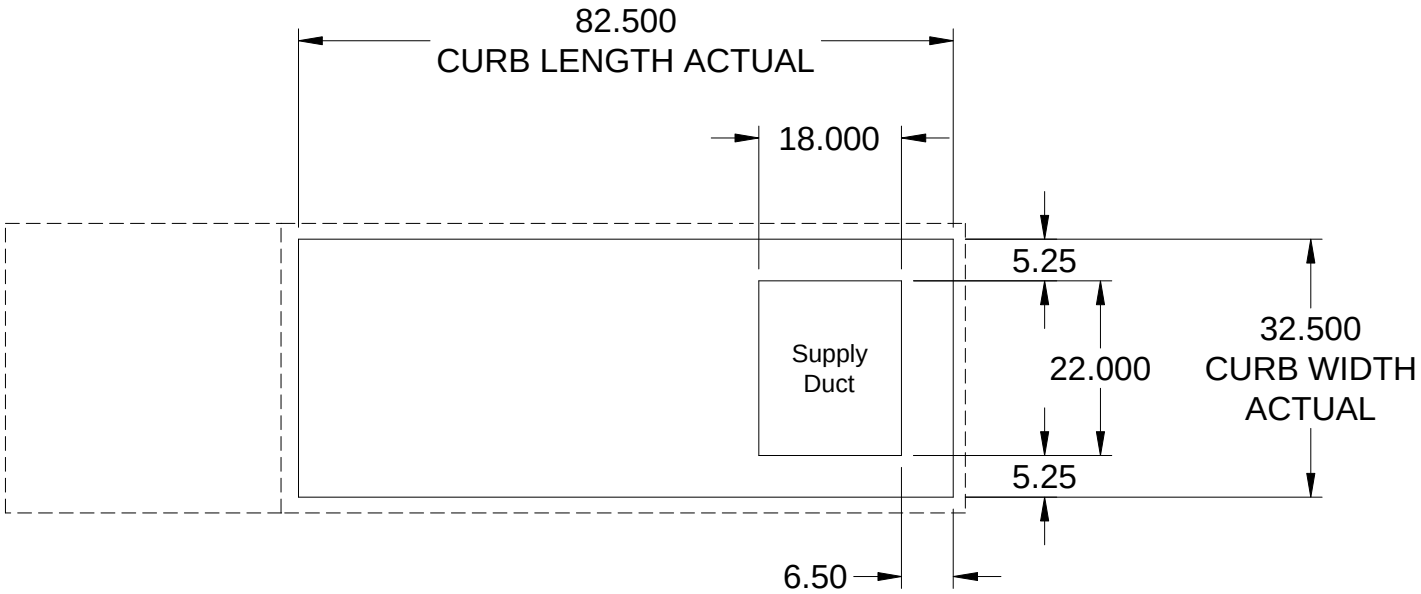

Notes - Footprint View
Minimum Roof Opening: The minimum roof opening size is the illustrated duct diameter plus 0.25 in. on all sides. For example: If the duct size is 14 x 14 in. square, the minimum roof opening size is 14.5 x 14.5 in. square.
Maximum Roof Opening: There must be a minimum perimeter of 1.75 in. between the roof opening and the roof curb. For example: If the roof curb is 75 x 30 in. square, the maximum roof opening is 71.5 x 26.5 in. inches square.
The weatherhood and filter sections of the make-up air unit extend beyond the curb. This is by design, to prevent water infiltration.

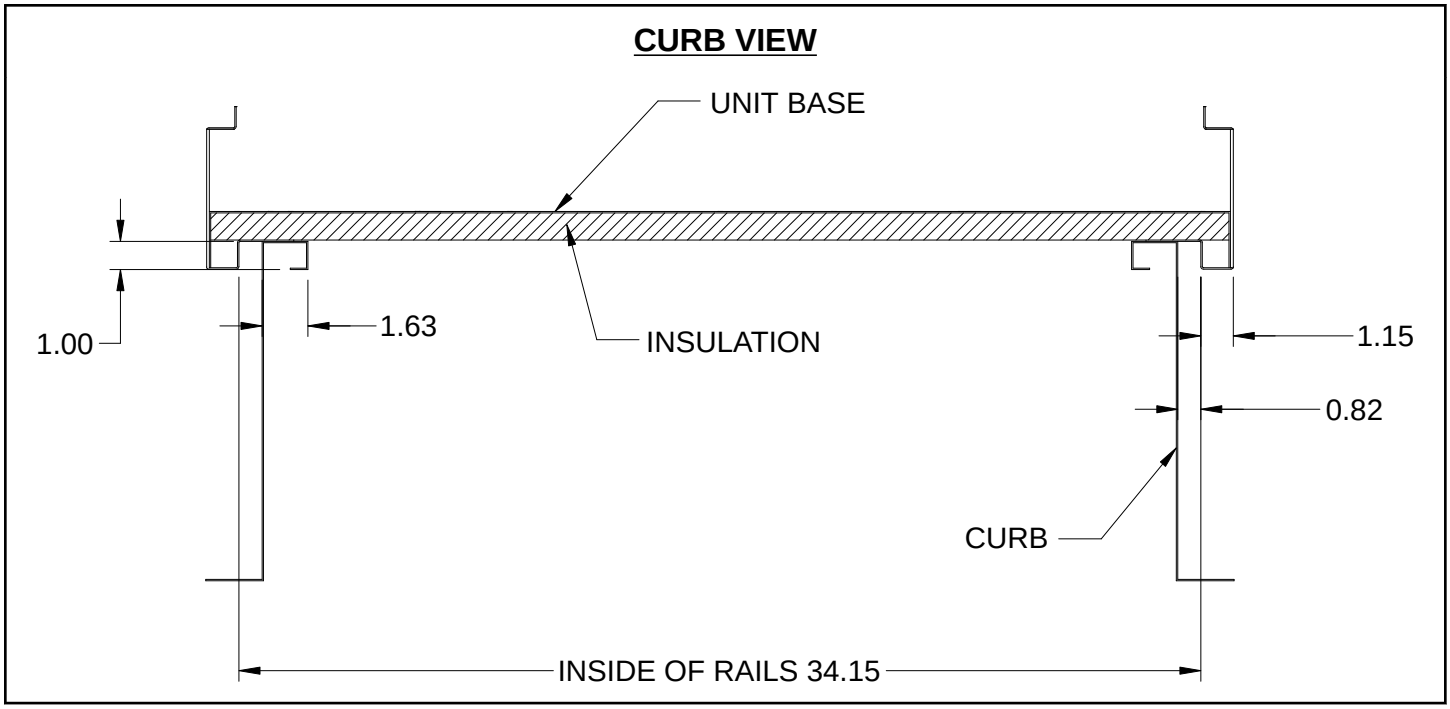

Notes - Curb View
All dimensions shown are in in.'s.
Curb Dimenision: Length = 82.5 in. Width = 32.5 in. Height = 20 in.

Clearance Specifications

Recommended Minimum Combustible Clearances				
	Floor (in.)	**Top (in.)**	**Sides (in.)**	**Ends (in.)**
Insulated Units	0	0	0	0
Non-Insulated Units	0	6	6	6

Notes - Combustible Clearances

Clearance to combustibles is defined as the minimum distance required between the heating source and the adjacent combustible surfaces to ensure the adjacent surface's temperature does not exceed 90 F above the ambient temperature.

Recommended Minimum Service Clearances	
Housing 32 and less (in.)	**Housing 35 and higher (in.)**
42 on the controls side of the unit	48 on the controls side of the unit

Notes - Service Clearances

To ensure ample space for component removal (evaporative cooling media, coils, filters, etc.), service clearances should be 6 in. wider than the width of the module itself.

Wiring Diagram

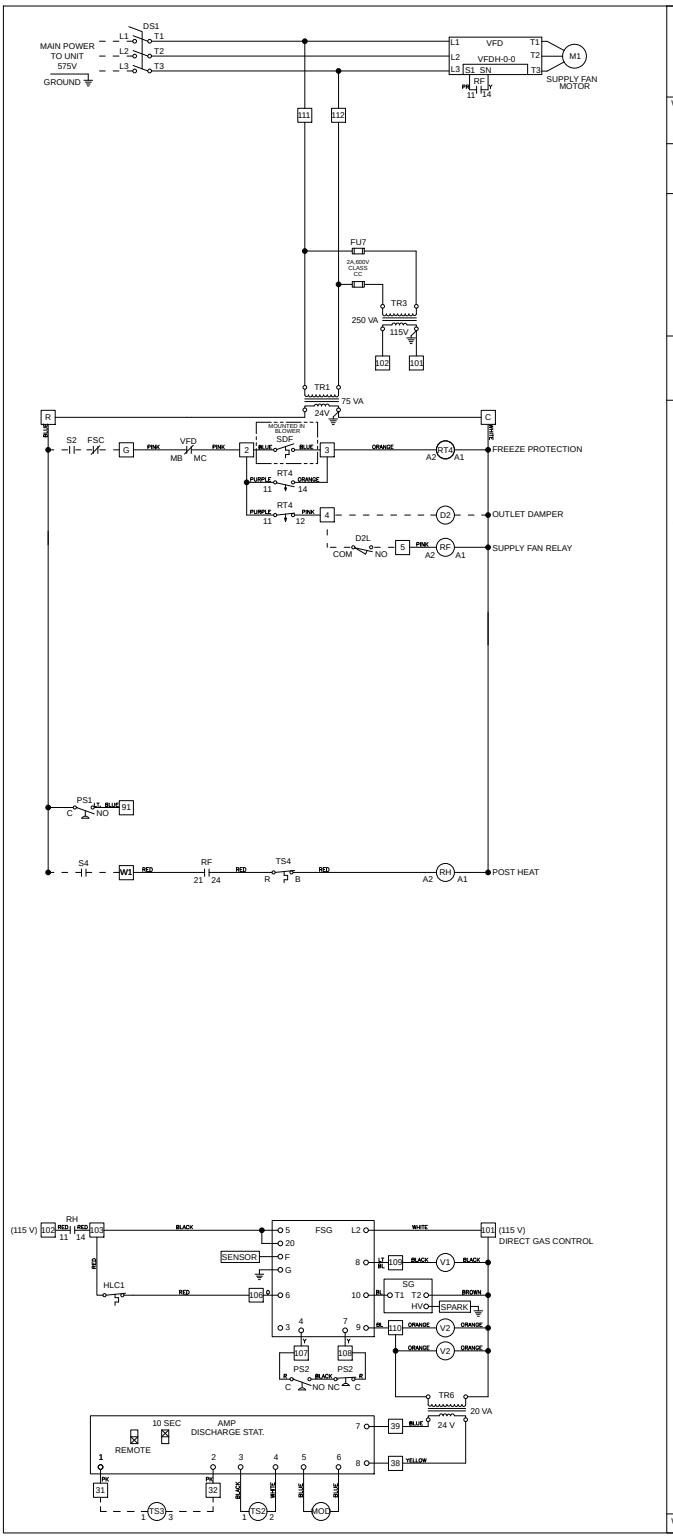

GREENHECK
Building Value in Air.

Wiring Diagram Code:

GD21N702D040N51AM19

CAUTION

UNIT SHALL BE GROUNDED IN ACCORDANCE WITH N.E.C.
POWER MUST BE OFF WHILE SERVICING.

NOTES

USE COPPER CONDUCTORS ONLY
60° C FOR TERMINALS RATED LESS THAN 100 AMPS.
75° C FOR TERMINALS RATED 100 AMPS OR MORE.

FIELD CONTROL WIRING RESISTANCE SHOULD NOT EXCEED 0.75 OHM.

FIELD WIRED – – – – –
FACTORY SUPPLIED AND WIRED ————

WIRE COLOR CODE

BK	BLACK	BL	BLUE	BR	BROWN
GY	GRAY	LT BL	LIGHT BLUE	O	ORANGE
PK	PINK	PR	PURPLE	R	RED
W	WHITE	Y	YELLOW		

LEGEND

AMP	AMPLIFIER
D2	OUTLET DAMPER
D2L	OUTLET DAMPER LIMIT
DS1	MAIN DISCONNECT SWITCH
FSC	FIRE SYSTEM CONTACT
FSG	FLAME SAFE GUARD
FU#	FUSE
HLC	HIGH LIMIT CONTROL
M#	MOTOR
MOD	MODULATING VALVE
OL#	MOTOR OVERLOAD
PS1	DIRTY FILTER SWITCH
PS2	AIR PROVING SWITCH
RF	SUPPLY FAN RELAY
RF1	FAN ENABLE RELAY
RH	HEAT RELAY
RT4	FREEZE PROTECTION TIMER SWITCH 1 and 4 DOWN - 2 and 3 UP / DIAL SET TO 4
S2	FAN SWITCH
S4	HEAT AND COOL SWITCH
SDF	SENSOR DISCHARGE - FREEZE
SG	SPARK GENERATOR
ST#	MOTOR STARTER
TR#	TRANSFORMER
TS2	DISCHARGE AIR SENSOR
TS3	TEMPERATURE SELECTOR
TS4	INLET AIR SENSOR - HEAT
V1	PILOT VALVE
V2	MAIN VALVE
VFD	VARIABLE FREQUENCY DRIVE

Wiring Template: M19 DOC NUMBER: ---- REV: ----

Manufacturer reserves the right to change, modify, or improve this product at anytime

OUTLET DAMPER

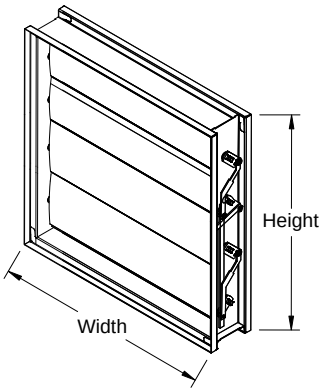

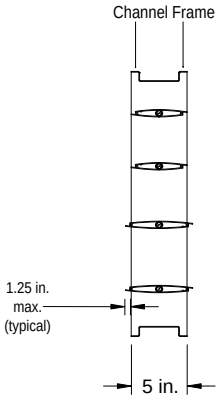

Notes: All dimensions shown are in units of inches. Width & Height furnished approximately 0.25 under size. Installation instructions available at www.greenheck.com. Customer supplied actuators configured with a jackshaft will be provided with a jackshaft this is one inch in diameter.

QTY	WIDTH	HEIGHT
1	18 in.	22 in.

NOTE: Width and Height are shown in nominal dimensions

Application & Design

The model VCD-34 is a low leakage control damper with thermally insulated blades. This model is intended for application in medium pressure and velocity systems. Non-jackshafted dampers will be supplied with a blade drive lever for internal actuator mounting. When external actuator mounting is specified, an extension pin with clip kit will be provided. Note: The extension pin with clip kit includes extension pin and clip.

Ratings

Pressure:	Up to 10 in. wg pressure differential
Velocity:	4,000 ft/min
Leakage:	Class 1A @ 1 in. wg, Class 1 @ up to 8 in. wg
Temperature:	Up to 250F

Manufacturer reserves right to change, alter, or improve this product at any time.

Roof Curb - GPI

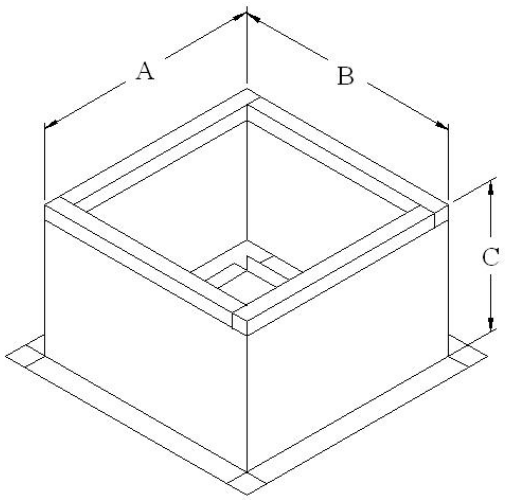

Roof Curb Dimensions		
Dimension	**Description**	**Value (in.)**
A	Length	82.5
B	Width	32.5
C	Height	20

GPI Curb Weight	74 lb

Construction Features and Notes
All Dimensions are actual.
Galvanized steel (18 ga.)
Straight sided with 2(in.) and wood nailer.
1 in., 3 lb. density insulation
The Roof Opening Dimension may NOT match the Structural Roof Support Dimension.
Curbs with length greater than 111.5 may ship knocked-down, dependent on manufacturing location.

Corner Weights

196 lb 196 lb

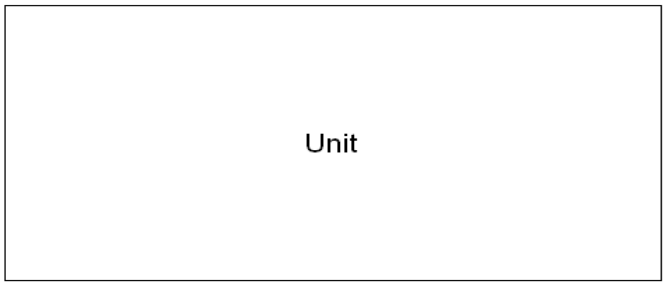

217 lb 216 lb

TSCP - Remote Control Panel

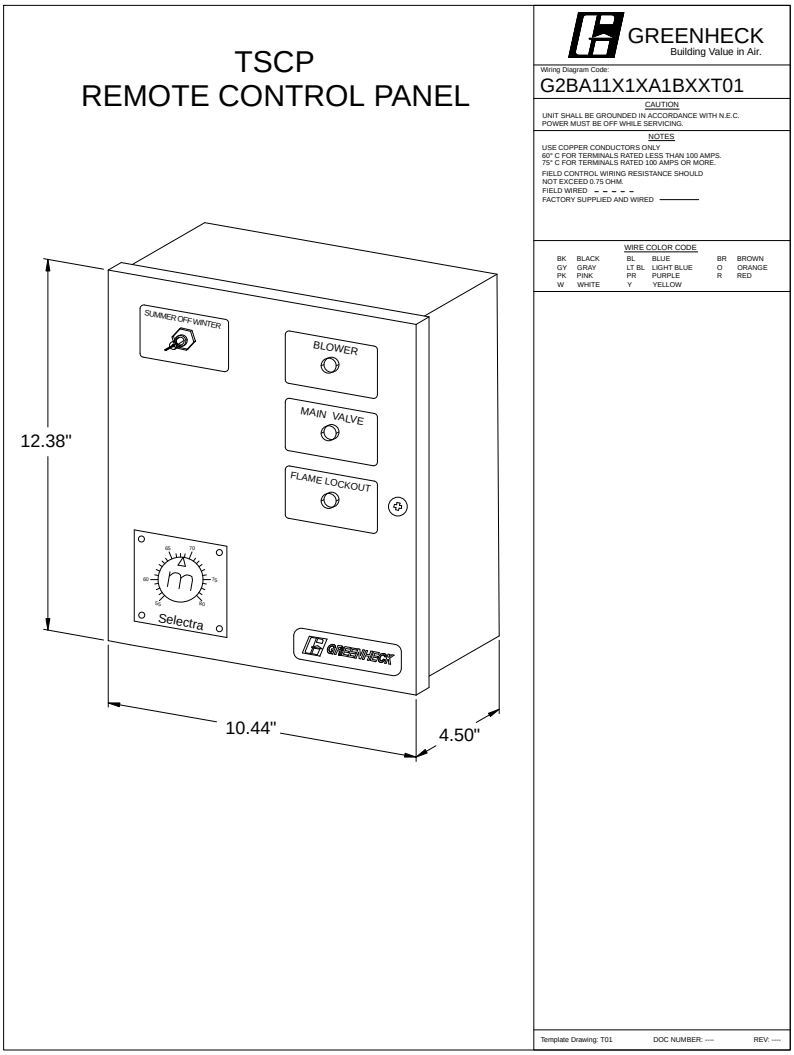

Standard Construction Features And Notes
Location of switches, lights and controls may vary.
All dimensions shown are in units of inches.
Galvanized steel with baked enamel finish.
Numbered terminal strip to match unit wiring.

Remote Panel Wiring Requirements

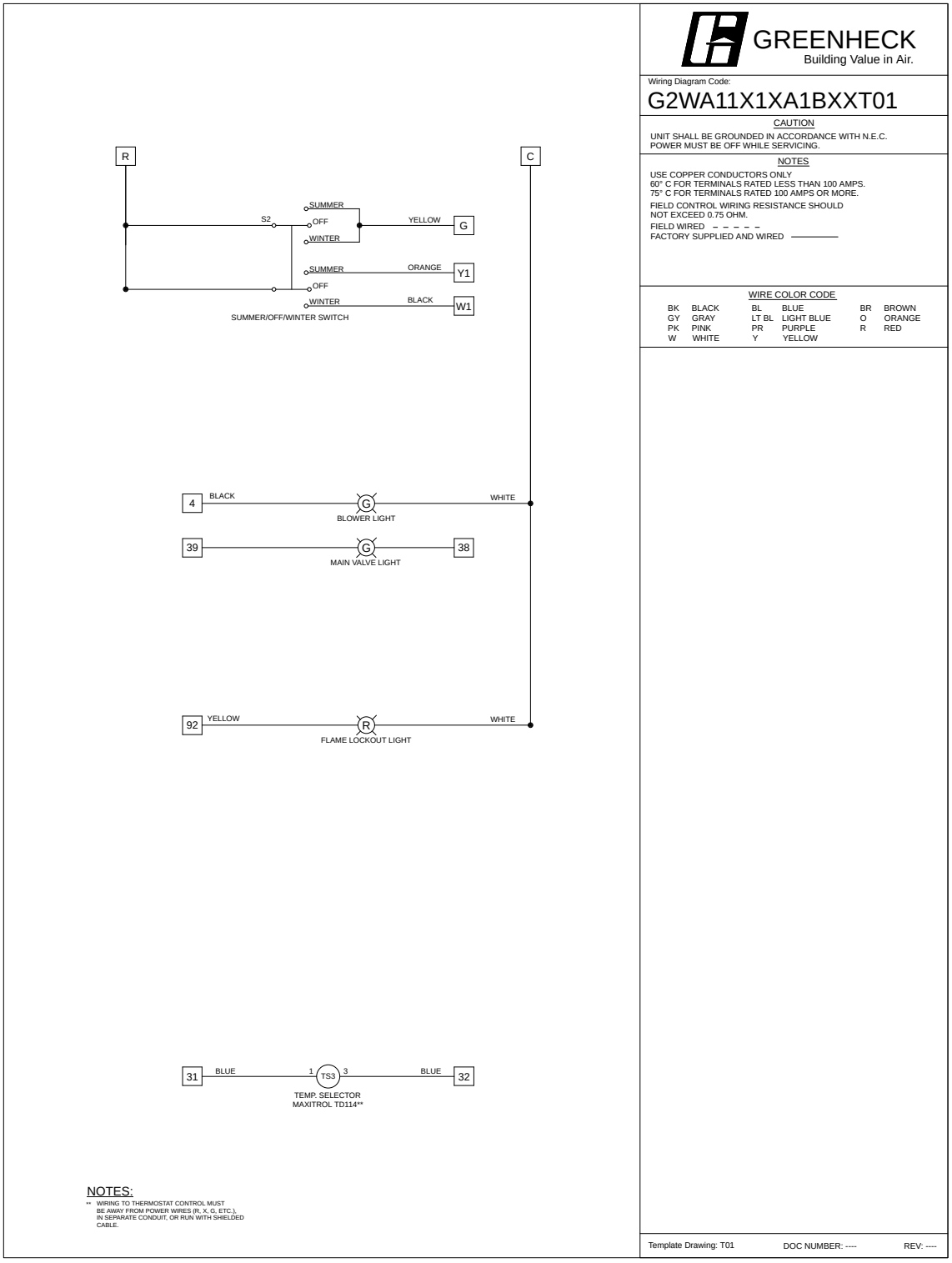

The wiring drawings details the number of the wires and the type of wire that needs to be run from the unit control center to the panel. A detailed wiring schematic will be provided with the panel when the unit ships.

SEQUENCE OF OPERATIONS

Unit Controls
The unit shall be provided from the factory with:

- 24VAC Transformer
- Terminal Strip
- Supply fan VFD
- Factory provided, field installed supply air insulated outlet damper with actuator
- Remote Control Panel

Remote Control Panel
A Permatector coated NEMA-1 rated remote control panel shall be shipped loose to control the basic operation of the unit. The panel shall contain the following:

- Summer / Off / Winter Switch
  Summer: Supply fan is enabled, heat is disabled.
  Off: Supply fan is disabled.
  Winter: Supply fan is enabled, heat is enabled.
- Blower Light
- Main Valve Light
- Dirty Filter Light

Unit Start-Up Sequence

- Supply Fan Enable Is Received
- Supply air outlet damper actuator is energized
- Supply air outlet damper actuator limit switch is proven closed
- Supply Fan Is Enabled

Supply Fan Sequence
The unit has been provided with a factory mounted variable frequency drive (VFD). The variable frequency drive shall control the supply fan speed as indicated by the following sequence:

Constant Volume
The VFD shall be programmed from the factory for a constant supply fan speed. This is to be adjusted for air balancing only and is not to be modulated.

Heating Control
A heating enable signal must be present and the supply fan must enabled before the unit will enable heating.

Heating Inlet Air Sensor (Heating Lockout)
The heating will be locked out when the outside air temperature is above the heating inlet air sensor set point (typical 65 F, adj.)

Direct Gas Fired Heating (Discharge Control)
The gas control amplifier located in the unit shall modulate the heating to maintain a supply temperature set point (55 F-90 F, adj.).

- A remote panel mounted set point dial shall control the supply temperature set point.

Building Freeze Protection
If the supply air temperature drops below 35 F for 300s (adj.), the supply fan will be disabled. Cycling the fan enable will reset the timer. This sequence is intended to prevent the unit from supply cold air into the building.

Warranty Statement for Make-Up Air

Unit Warranty

Greenheck warrants the equipment to be free from defects in material and workmanship for a period of 1 year (standard) from the shipment date.

DG Burner Extended Warranty

The warranty does not include items deemed as consumable components, including, but not limited to: Igniters, Spark rods, Spark generator, Flame rods,Flame wires, UV eye components, and associated components.

Note: Rust, discoloration of the burner material and cracks or holes smaller than .75 in. is not qualification for a defective burner.

Warranty Notes

Any component which proves defective during the warranty period will be repaired or replaced at Greenheck's sole option when returned to our factory, transportation prepaid. All warranties do not include labor costs associated with troubleshooting, removal, or installation. Greenheck will not be liable for any consequential, punitive, or incidental damages resulting from use, repair, or operation of any Greenheck product. These warranties are exclusive and are in lieu of all other warranties, whether written, oral, or implied, including the warranty of merchantability and the warranty of fitness for a particular purpose. No person (including any agent or salesperson) has authority to expand Seller's obligation beyond the terms of this warranty, or to state that the performance of the product is other than that published by Seller.

As a result of our commitment to continuous improvement, Greenheck reserves the right to change specifications without notice.

DG-110-H10

Unit Performance

Design Conditions

Elevation (ft)	Summer		Winter (°F)	Supply (CFM)	Outdoor Air (CFM)
	DB (°F)	WB (°F)			
374	87.1	73.5	-15.5	2,141	2,141

Unit Specifications

Qty	Weight (lb)	Cooling Type	Heating Type	Unit Installation	Unit ETL Listing
1	548 (+/- 5%)	None	Direct Gas-Fired	Outdoor/Indoor	ANSI Z83.4 / CSA 3.7

Configuration

Unit Orientation	Unit Configuration	Outdoor Air Intake	Return Air Intake	Supply Air Discharge
Horizontal	Constant Volume 100% OA	End	-	Bottom

Heating Specifications

Type	Gas Type	Gas Pressure		Capacity (MBH)		Temperature Rise (°F)	Performance	
		Min (in. wg)	Max (Psi)	Input	Output		EAT (°F)	LAT (°F)
Direct Gas	Natural	7	0.5	177.2	163.0	70.5	-16.0	55.0

Air Performance

Type	Total Volume (CFM)	External SP (in. wg)	Total SP (in. wg)	RPM	Operating Power (hp)	Fan			
						Qty	Type	Size (in.)	Drive-Type
Supply	2,141	1	1.803	1310	1.22	1	Forward Curve	10	Belt-Drive

Motor Specifications

Motor	Qty	Size (hp)	Enclosure	Efficiency	RPM
Supply Fan Motor	1	1-1/2	ODP	NEMA Premium	1725

Electrical Specifications

Power Supply	Rating (V/C/P)	MCA (A)	MOP (A)
Unit	575/60/3	3.3	15

CONSTRUCTION FEATURES AND ACCESSORIES

Unit	
Unit Installation - Indoor or Outdoor	Std
Unit Construction - Double Wall	X
Wall Insulation - 1in. fiberglass - Heat source on	X
Base Insulation - 1in. fiberglass - entire unit base pan	Std
Corrosion Resistant Fasteners	Std
Access and Connections - Right side when facing intake	X
Service Access - Removable lift off panels	X
Unit Finish - Permatector ASTM B117 salt spray 2500 hours	X
Finish Color - Concrete Gray (RAL 7023)	X
Supply Fan - Belt-drive, forward-curved	X
Supply Fan and Motor Vibration isolation - Neoprene	X
Controls	
Unit Controls - Terminal strip with remote panel	X
Remote Panel - Industrial (NEMA-1)	X
Temperature Control - Discharge control	X
Supply Fan VFD - VFD by factory	X
Supply Fan Control - Constant Volume	X
Melink/Vari-Flow wiring package	
Recirculation Control	
Unoccupied Mode (Night Setback)	
Control Accessories	
Heating Inlet Air Sensor	X
Cooling Inlet Air Sensor	
Dirty Filter Switch	X
Fire Stat Type III (Ships loose)	
120V/24V Smoke Detector (Ships loose)	
Inlet Damper End Switch	
External Cooling Lockout Relay	
Freeze Protection (Supply Air Low Limit)	X
Auxiliary Supply Starter Contacts	
Auxiliary Exhaust Starter Contacts	
Airflow Proving Monitoring Contact	

Accessories	
Factory Installed, Lockable, NEMA 3R Disconnect	Std
Weatherhood - Aluminum Mesh filtered	X
Supply Air Filters	
Outdoor Air Inlet Damper	
Supply Air Outlet Damper - Insulated, low leakage	X
Diffuser	
Roof Curb - GPI	X
Combination Curb	
Spare Belts	
Spare Filters	
Motor with Shaft Grounding	
Service Outlet - Shipped loose	X
Gas Heating Accessories	
Pilot Ignition	Std
Flame Sensing - Flame rod	X
Flame Safeguard Display	
Agency Approval - ETL and IRI	Std
FM Approved	
Minnesota Code Requirements	
High Gas Pressure Switch	
Low Gas Pressure Switch	
Visual Indication Valves	
External Gas Pressure Regulator (Ships loose)	
Warranty Options	
Unit Warranty - 1 Year	X
5 Year Burner Warranty	
10 Year Burner Warranty	

Standard Option	Std
Not Included	
Included	X

Fan Charts And Performance

Supply Fan Performance

Total Volume (CFM)	External SP (in. wg)	Total SP (in. wg)	RPM	Operating Power (hp)	Motor		Fan		
					Qty	Size (hp)	Qty	Type	Drive-Type
2,141	1	1.803	1310	1.22	1	1-1/2	1	Forward Curve	Belt

Pressure Drop (in. wg)

Weatherhood	Filter	Damper	Cooling	Heating	External	Total
0.102	-	0.076	-	0.625	1	1.803

Sound Performance in Accordance with AMCA

Sound Power by Octave Band								Lwa	dBA	Sones
62.5	125	250	500	1000	2000	4000	8000			
92	93	81	73	71	69	67	61	81	70	17.9

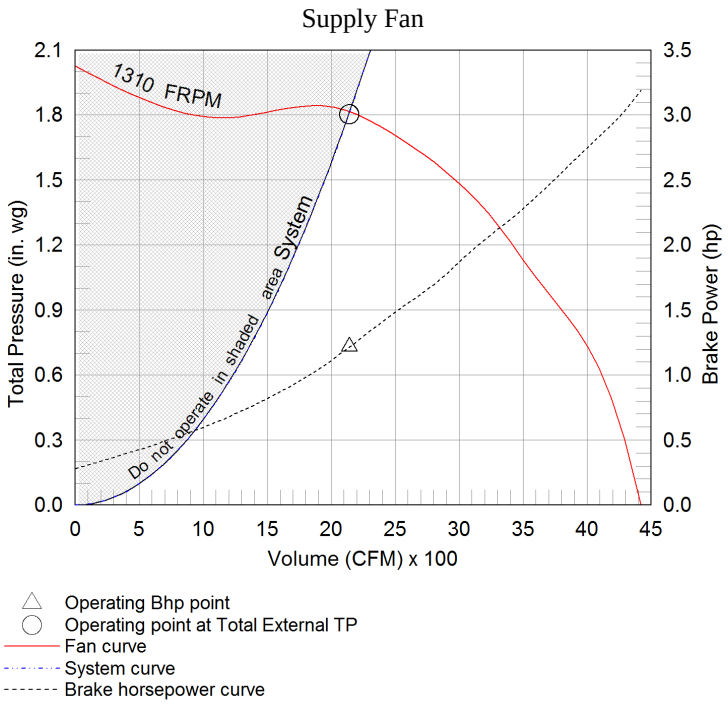

Heating Specifications

Heating Performance

Type	Gas Type	Gas Pressure		Capacity (MBH)		Temperature Rise (°F)	Performance	
		Min (in. wg)	Max (Psi)	Input	Output		EAT (°F)	LAT (°F)
Direct Gas	Natural	7	0.5	177.2	163.0	70.5	-16.0	55.0

Gas Train Details

Redundant Main Valves	Electronic Modulating Valve	Pilot Valve	Internal Regulator	Visual Indication Valve	Proof of Closure Valve	Hydraulic Main Valve(s)	Gas Pressure Switch(es)	External Regulator
Std	Std	Std	Std	-	-	-	-	-

Additional Heating Information

Agency Approvals			Temperature Control	Flame Sensing	Ignition Control	CO2 Sensor	Flame Safeguard Display
ETL and IRI	FM Approved	Minnesota Code					
Std	-	-	Discharge	Flame Rod	Pilot	-	-

Unit Details
92% thermal efficiency
Cast aluminum burner manifold with stainless steel mixing plates
Electronic modulation burner control

10 second pre-purge sequence
Low fire start

Gas Connections

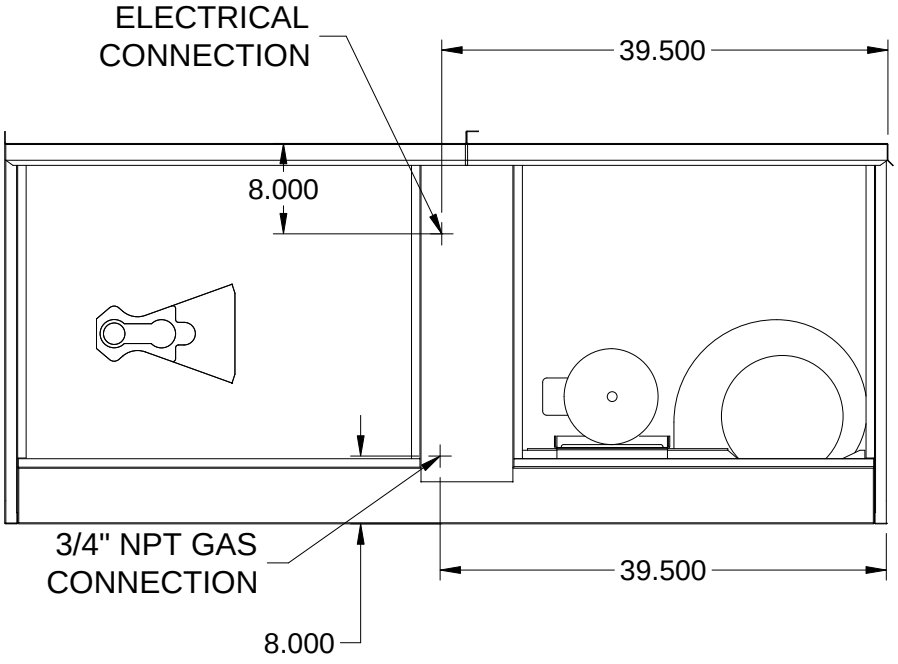

ELEVATION VIEW

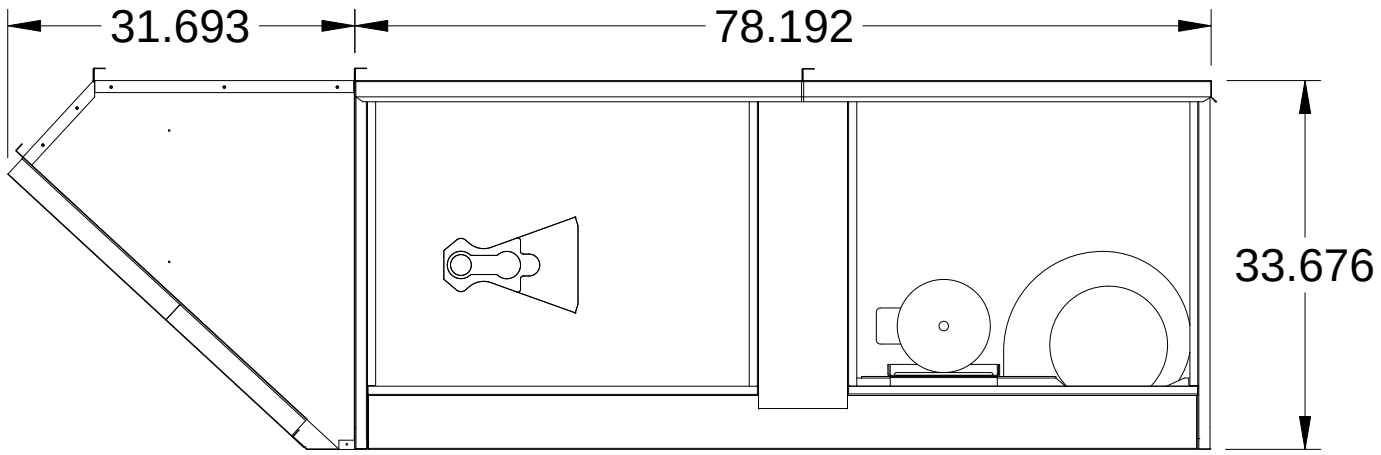

Notes - Elevation View
Standard configuration for unit access is on the right-hand side, when looking into the unit intake in the direction of airflow.
Order of unit sections is from intake of unit to discharge of unit.
Sections included on this unit: Weatherhood Section, Heating Section
Insulation: Double Wall, from Burner Section through end of unit.

PLAN VIEW

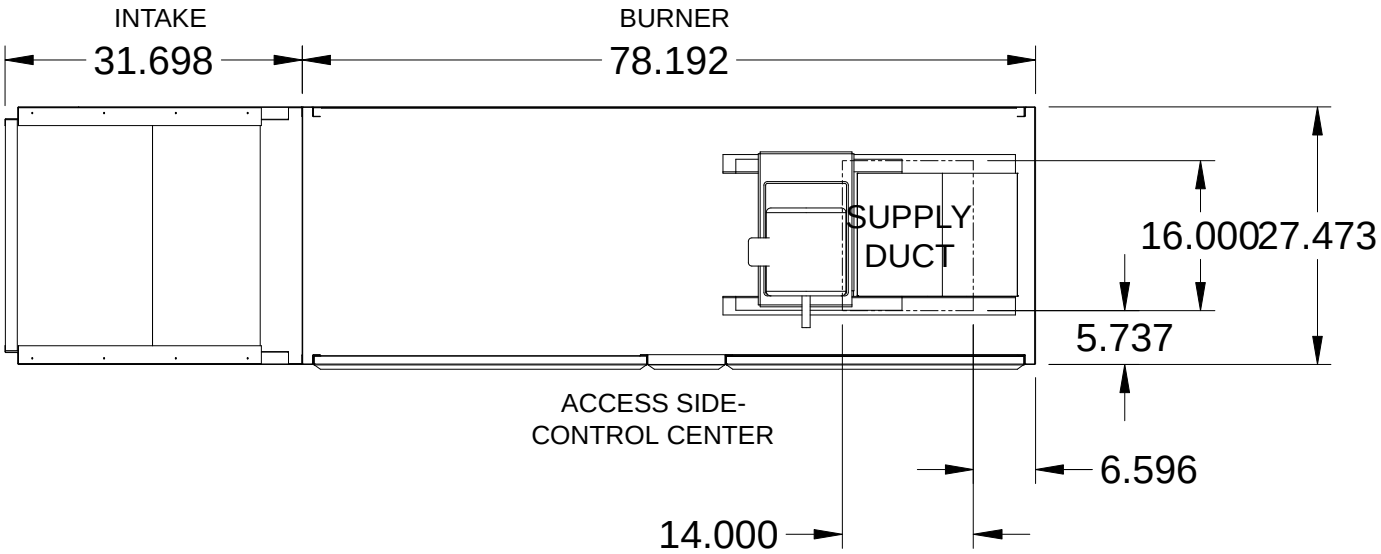

Notes - Plan View
Standard configuration for unit access is on the right-hand side, when looking into the unit intake in the direction of airflow.

END VIEW

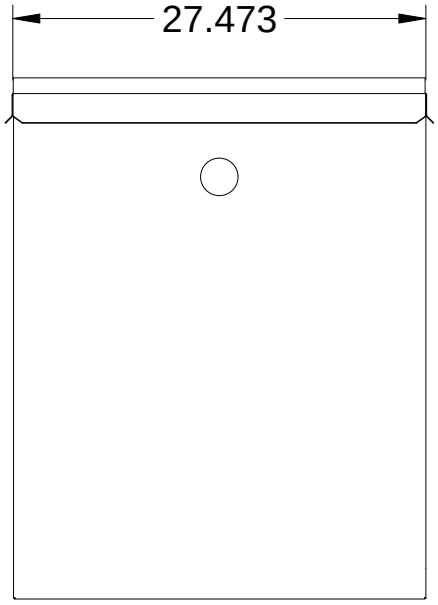

FOOTPRINT VIEW

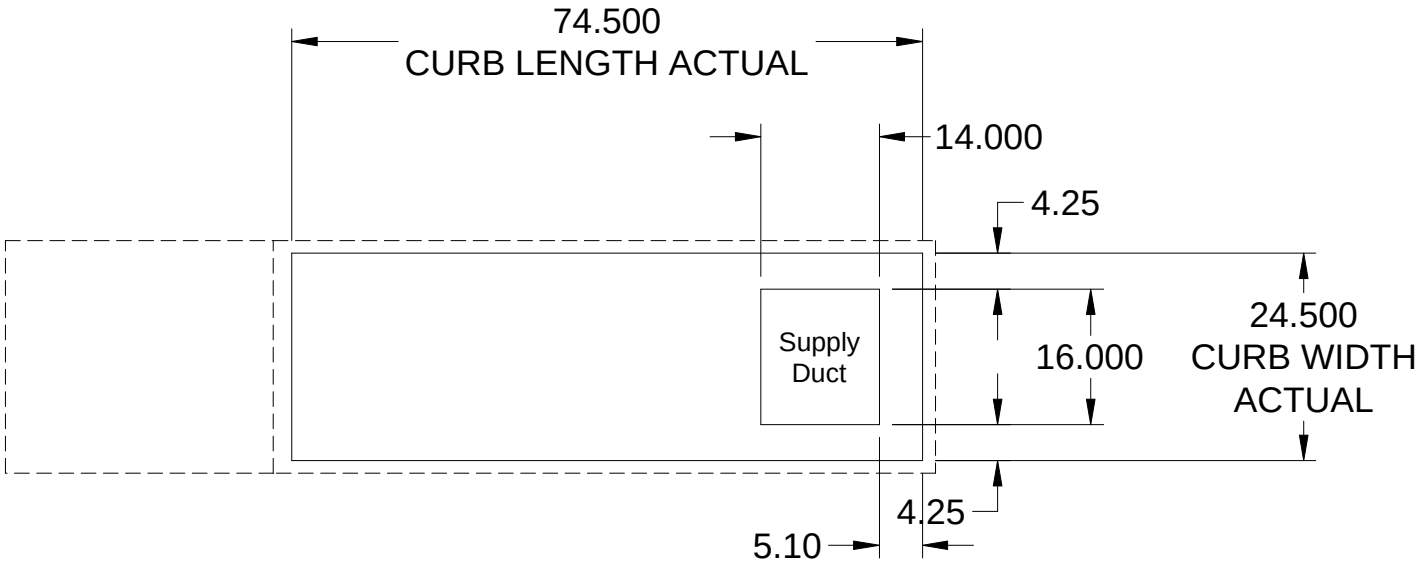

Notes - Footprint View
Minimum Roof Opening: The minimum roof opening size is the illustrated duct diameter plus 0.25 in. on all sides. For example: If the duct size is 14 x 14 in. square, the minimum roof opening size is 14.5 x 14.5 in. square.
Maximum Roof Opening: There must be a minimum perimeter of 1.75 in. between the roof opening and the roof curb. For example: If the roof curb is 75 x 30 in. square, the maximum roof opening is 71.5 x 26.5 in. inches square.
The weatherhood and filter sections of the make-up air unit extend beyond the curb. This is by design, to prevent water infiltration.

CURB VIEW

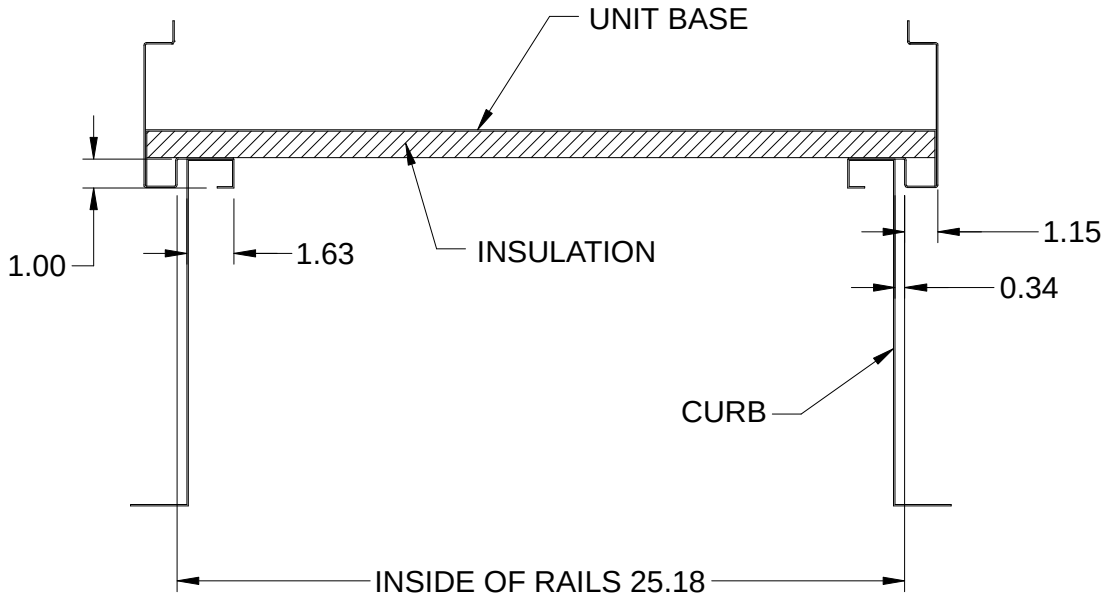

Notes - Curb View
All dimensions shown are in in.'s.
Curb Dimenision: Length = 74.5 in. Width = 24.5 in. Height = 20 in.

Clearance Specifications

Recommended Minimum Combustible Clearances				
	Floor (in.)	**Top (in.)**	**Sides (in.)**	**Ends (in.)**
Insulated Units	0	0	0	0
Non-Insulated Units	0	6	6	6

Notes - Combustible Clearances

Clearance to combustibles is defined as the minimum distance required between the heating source and the adjacent combustible surfaces to ensure the adjacent surface's temperature does not exceed 90 F above the ambient temperature.

Recommended Minimum Service Clearances	
Housing 32 and less (in.)	**Housing 35 and higher (in.)**
42 on the controls side of the unit	48 on the controls side of the unit

Notes - Service Clearances

To ensure ample space for component removal (evaporative cooling media, coils, filters, etc.), service clearances should be 6 in. wider than the width of the module itself.

Wiring Diagram

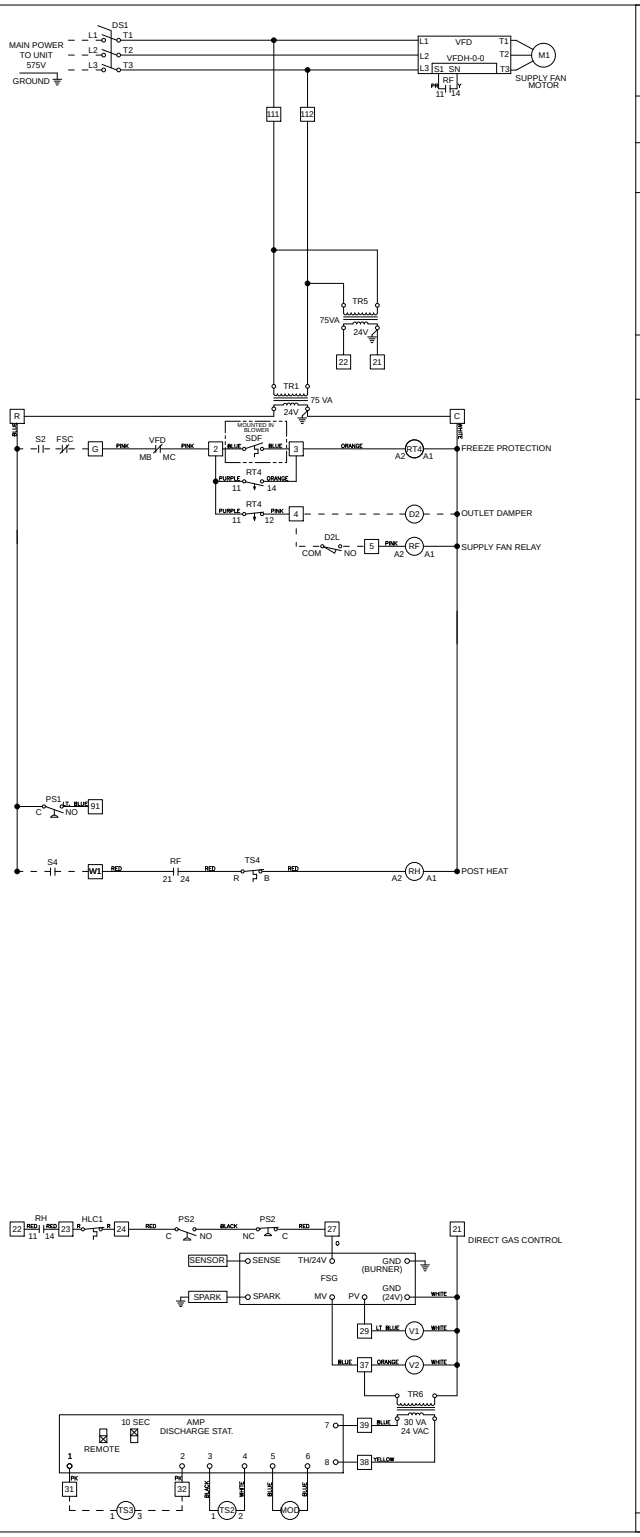

GREENHECK
Building Value in Air.

Wiring Diagram Code:

GD61N701D040N51AM19

CAUTION

UNIT SHALL BE GROUNDED IN ACCORDANCE WITH N.E.C.
POWER MUST BE OFF WHILE SERVICING.

NOTES

USE COPPER CONDUCTORS ONLY
60° C FOR TERMINALS RATED LESS THAN 100 AMPS.
75° C FOR TERMINALS RATED 100 AMPS OR MORE.

FIELD CONTROL WIRING RESISTANCE SHOULD NOT EXCEED 0.75 OHM.

FIELD WIRED – – – – –
FACTORY SUPPLIED AND WIRED ————

WIRE COLOR CODE

BK	BLACK	BL	BLUE	BR	BROWN
GY	GRAY	LT BL	LIGHT BLUE	O	ORANGE
PK	PINK	PR	PURPLE	R	RED
W	WHITE	Y	YELLOW		

LEGEND

AMP	AMPLIFIER
D2	OUTLET DAMPER
D2L	OUTLET DAMPER LIMIT
DS1	MAIN DISCONNECT SWITCH
FSC	FIRE SYSTEM CONTACT
FSG	FLAME SAFE GUARD
HLC	HIGH LIMIT CONTROL
M#	MOTOR
MOD	MODULATING VALVE
OL#	MOTOR OVERLOAD
PS1	DIRTY FILTER SWITCH
PS2	AIR PROVING SWITCH
RF	SUPPLY FAN RELAY
RF1	FAN ENABLE RELAY
RH	HEAT RELAY
RT4	FREEZE PROTECTION TIMER SWITCH 1 and 4 DOWN - 2 and 3 UP / DIAL SET TO 4
S2	FAN SWITCH
S4	HEAT AND COOL SWITCH
SDF	SENSOR DISCHARGE - FREEZE
SG	SPARK GENERATOR
ST#	MOTOR STARTER
TR#	TRANSFORMER
TS2	DISCHARGE AIR SENSOR
TS3	TEMPERATURE SELECTOR
TS4	INLET AIR SENSOR - HEAT
V1	PILOT VALVE
V2	MAIN VALVE
VFD	VARIABLE FREQUENCY DRIVE

Wiring Template: M19 DOC NUMBER: ---- REV: ----

Manufacturer reserves the right to change, modify, or improve this product at anytime

OUTLET DAMPER

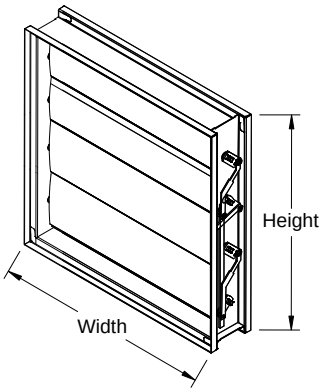

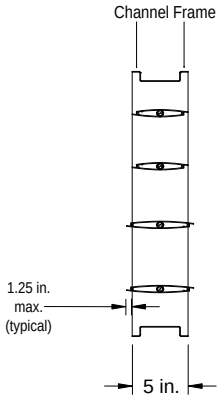

Notes: All dimensions shown are in units of inches. Width & Height furnished approximately 0.25 under size. Installation instructions available at www.greenheck.com. Customer supplied actuators configured with a jackshaft will be provided with a jackshaft this is one inch in diameter.

QTY	WIDTH	HEIGHT
1	14 in.	16 in.

NOTE: Width and Height are shown in nominal dimensions

Application & Design

The model VCD-34 is a low leakage control damper with thermally insulated blades. This model is intended for application in medium pressure and velocity systems. Non-jackshafted dampers will be supplied with a blade drive lever for internal actuator mounting. When external actuator mounting is specified, an extension pin with clip kit will be provided. Note: The extension pin with clip kit includes extension pin and clip.

Ratings

Pressure:	Up to 10 in. wg pressure differential
Velocity:	4,000 ft/min
Leakage:	Class 1A @ 1 in. wg, Class 1 @ up to 8 in. wg
Temperature:	Up to 250F

Manufacturer reserves right to change, alter, or improve this product at any time.

Roof Curb - GPI

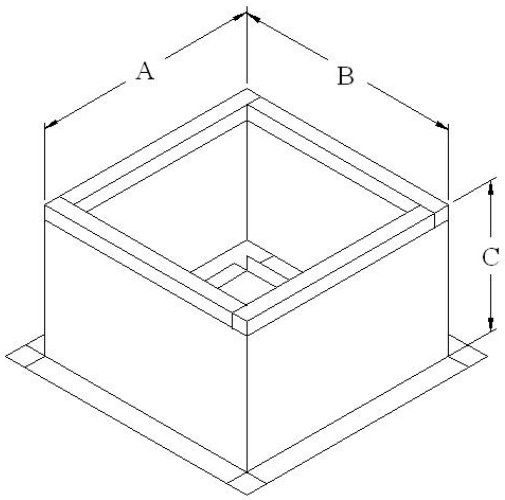

Roof Curb Dimensions		
Dimension	**Description**	**Value (in.)**
A	Length	74.5
B	Width	24.5
C	Height	20

GPI Curb Weight	64 lb

Construction Features and Notes
All Dimensions are actual.
Galvanized steel (18 ga.)
Straight sided with 2(in.) and wood nailer.
1 in., 3 lb. density insulation
The Roof Opening Dimension may NOT match the Structural Roof Support Dimension.
Curbs with length greater than 111.5 may ship knocked-down, dependent on manufacturing location.

Corner Weights

138 lb 123 lb

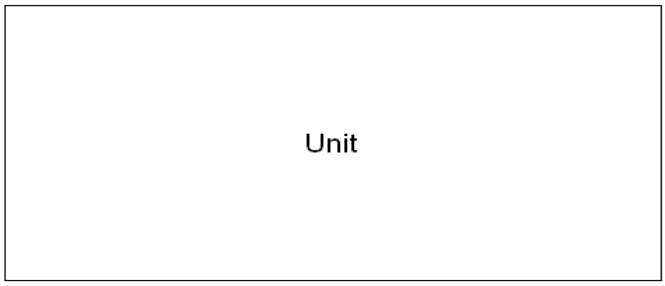

152 lb 136 lb

TSCP - Remote Control Panel

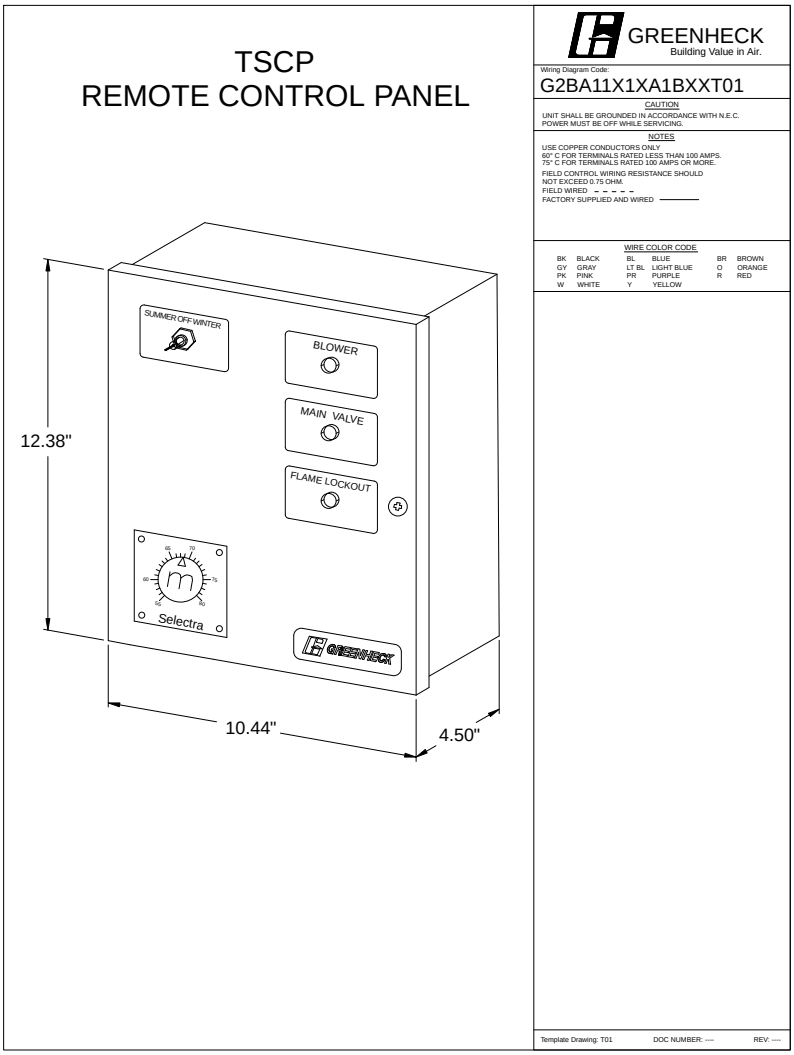

Standard Construction Features And Notes
Location of switches, lights and controls may vary.
All dimensions shown are in units of inches.
Galvanized steel with baked enamel finish.
Numbered terminal strip to match unit wiring.

Remote Panel Wiring Requirements

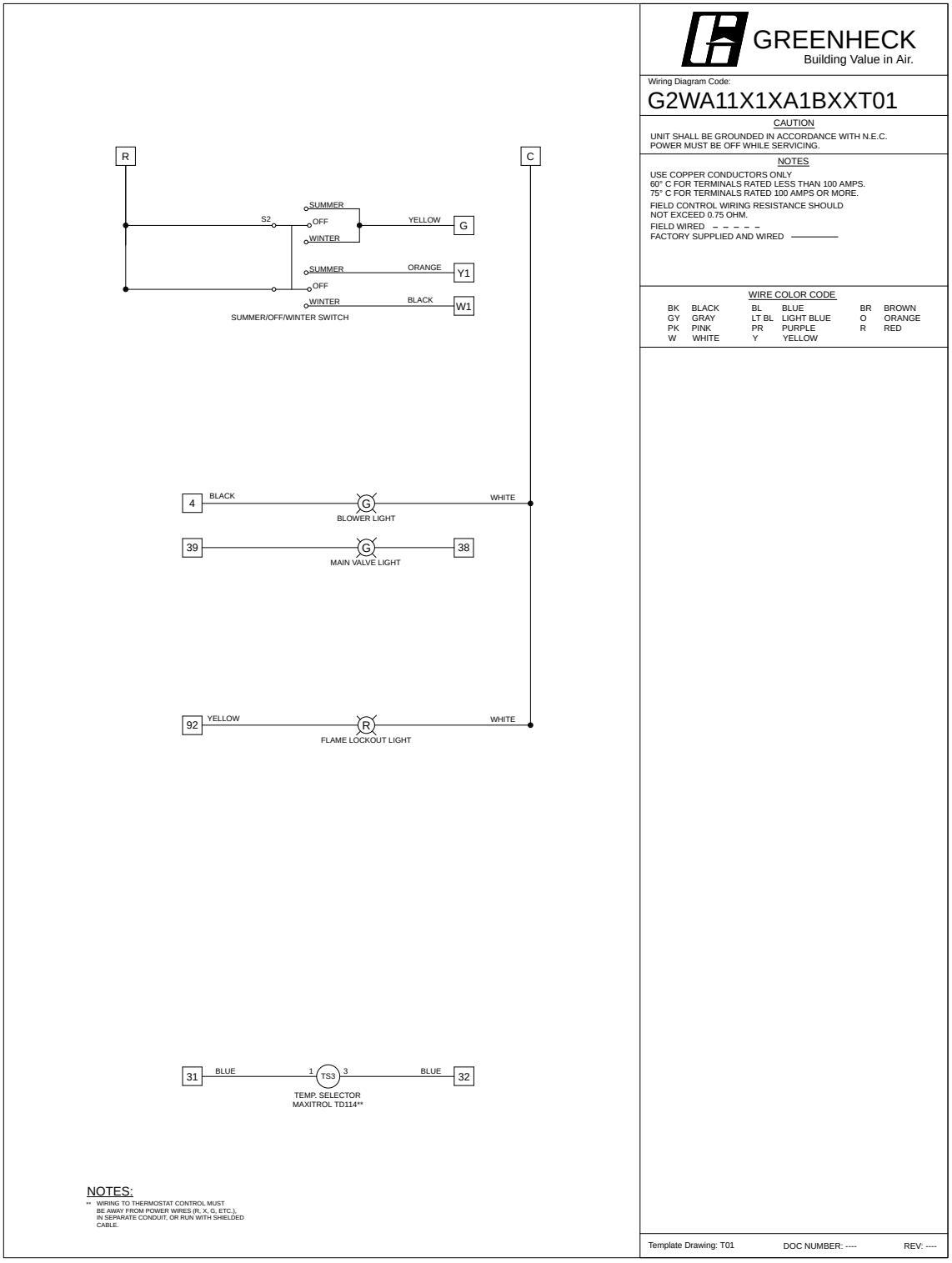

The wiring drawings details the number of the wires and the type of wire that needs to be run from the unit control center to the panel. A detailed wiring schematic will be provided with the panel when the unit ships.

SEQUENCE OF OPERATIONS

Unit Controls
The unit shall be provided from the factory with:

- 24VAC Transformer
- Terminal Strip
- Supply fan VFD
- Factory provided, field installed supply air insulated outlet damper with actuator
- Remote Control Panel

Remote Control Panel
A Permatector coated NEMA-1 rated remote control panel shall be shipped loose to control the basic operation of the unit. The panel shall contain the following:

- Summer / Off / Winter Switch
  Summer: Supply fan is enabled, heat is disabled.
  Off: Supply fan is disabled.
  Winter: Supply fan is enabled, heat is enabled.
- Blower Light
- Main Valve Light
- Dirty Filter Light

Unit Start-Up Sequence

- Supply Fan Enable Is Received
- Supply air outlet damper actuator is energized
- Supply air outlet damper actuator limit switch is proven closed
- Supply Fan Is Enabled

Supply Fan Sequence
The unit has been provided with a factory mounted variable frequency drive (VFD). The variable frequency drive shall control the supply fan speed as indicated by the following sequence:

Constant Volume
The VFD shall be programmed from the factory for a constant supply fan speed. This is to be adjusted for air balancing only and is not to be modulated.

Heating Control
A heating enable signal must be present and the supply fan must enabled before the unit will enable heating.

Heating Inlet Air Sensor (Heating Lockout)
The heating will be locked out when the outside air temperature is above the heating inlet air sensor set point (typical 65 F, adj.)

Direct Gas Fired Heating (Discharge Control)
The gas control amplifier located in the unit shall modulate the heating to maintain a supply temperature set point (55 F-90 F, adj.).

- A remote panel mounted set point dial shall control the supply temperature set point.

Building Freeze Protection
If the supply air temperature drops below 35 F for 300s (adj.), the supply fan will be disabled. Cycling the fan enable will reset the timer. This sequence is intended to prevent the unit from supply cold air into the building.

Warranty Statement for Make-Up Air

Unit Warranty

Greenheck warrants the equipment to be free from defects in material and workmanship for a period of 1 year (standard) from the shipment date.

DG Burner Extended Warranty

The warranty does not include items deemed as consumable components, including, but not limited to: Igniters, Spark rods, Spark generator, Flame rods,Flame wires, UV eye components, and associated components.

Note: Rust, discoloration of the burner material and cracks or holes smaller than .75 in. is not qualification for a defective burner.

Warranty Notes

Any component which proves defective during the warranty period will be repaired or replaced at Greenheck's sole option when returned to our factory, transportation prepaid. All warranties do not include labor costs associated with troubleshooting, removal, or installation. Greenheck will not be liable for any consequential, punitive, or incidental damages resulting from use, repair, or operation of any Greenheck product. These warranties are exclusive and are in lieu of all other warranties, whether written, oral, or implied, including the warranty of merchantability and the warranty of fitness for a particular purpose. No person (including any agent or salesperson) has authority to expand Seller's obligation beyond the terms of this warranty, or to state that the performance of the product is other than that published by Seller.

As a result of our commitment to continuous improvement, Greenheck reserves the right to change specifications without notice.

DG-110-H10

Unit Performance

Design Conditions

Elevation (ft)	Summer		Winter (°F)	Supply (CFM)	Outdoor Air (CFM)
	DB (°F)	WB (°F)			
374	87.1	73.5	-15.5	2,141	2,141

Unit Specifications

Qty	Weight (lb)	Cooling Type	Heating Type	Unit Installation	Unit ETL Listing
1	548 (+/- 5%)	None	Direct Gas-Fired	Outdoor/Indoor	ANSI Z83.4 / CSA 3.7

Configuration

Unit Orientation	Unit Configuration	Outdoor Air Intake	Return Air Intake	Supply Air Discharge
Horizontal	Constant Volume 100% OA	End	-	Bottom

Heating Specifications

Type	Gas Type	Gas Pressure		Capacity (MBH)		Temperature Rise (°F)	Performance	
		Min (in. wg)	Max (Psi)	Input	Output		EAT (°F)	LAT (°F)
Direct Gas	Natural	7	0.5	177.2	163.0	70.5	-16.0	55.0

Air Performance

Type	Total Volume (CFM)	External SP (in. wg)	Total SP (in. wg)	RPM	Operating Power (hp)	Fan			
						Qty	Type	Size (in.)	Drive-Type
Supply	2,141	1	1.803	1310	1.22	1	Forward Curve	10	Belt-Drive

Motor Specifications

Motor	Qty	Size (hp)	Enclosure	Efficiency	RPM
Supply Fan Motor	1	1-1/2	ODP	NEMA Premium	1725

Electrical Specifications

Power Supply	Rating (V/C/P)	MCA (A)	MOP (A)
Unit	575/60/3	3.3	15

CONSTRUCTION FEATURES AND ACCESSORIES

Unit	
Unit Installation - Indoor or Outdoor	Std
Unit Construction - Double Wall	X
Wall Insulation - 1in. fiberglass - Heat source on	X
Base Insulation - 1in. fiberglass - entire unit base pan	Std
Corrosion Resistant Fasteners	Std
Access and Connections - Right side when facing intake	X
Service Access - Removable lift off panels	X
Unit Finish - Permatector ASTM B117 salt spray 2500 hours	X
Finish Color - Concrete Gray (RAL 7023)	X
Supply Fan - Belt-drive, forward-curved	X
Supply Fan and Motor Vibration isolation - Neoprene	X
Controls	
Unit Controls - Terminal strip with remote panel	X
Remote Panel - Industrial (NEMA-1)	X
Temperature Control - Discharge control	X
Supply Fan VFD - VFD by factory	X
Supply Fan Control - Constant Volume	X
Melink/Vari-Flow wiring package	
Recirculation Control	
Unoccupied Mode (Night Setback)	
Control Accessories	
Heating Inlet Air Sensor	X
Cooling Inlet Air Sensor	
Dirty Filter Switch	X
Fire Stat Type III (Ships loose)	
120V/24V Smoke Detector (Ships loose)	
Inlet Damper End Switch	
External Cooling Lockout Relay	
Freeze Protection (Supply Air Low Limit)	X
Auxiliary Supply Starter Contacts	
Auxiliary Exhaust Starter Contacts	
Airflow Proving Monitoring Contact	

Accessories	
Factory Installed, Lockable, NEMA 3R Disconnect	Std
Weatherhood - Aluminum Mesh filtered	X
Supply Air Filters	
Outdoor Air Inlet Damper	
Supply Air Outlet Damper - Insulated, low leakage	X
Diffuser	
Roof Curb - GPI	X
Combination Curb	
Spare Belts	
Spare Filters	
Motor with Shaft Grounding	
Service Outlet - Shipped loose	X
Gas Heating Accessories	
Pilot Ignition	Std
Flame Sensing - Flame rod	X
Flame Safeguard Display	
Agency Approval - ETL and IRI	Std
FM Approved	
Minnesota Code Requirements	
High Gas Pressure Switch	
Low Gas Pressure Switch	
Visual Indication Valves	
External Gas Pressure Regulator (Ships loose)	
Warranty Options	
Unit Warranty - 1 Year	X
5 Year Burner Warranty	
10 Year Burner Warranty	

Standard Option	Std
Not Included	
Included	X

Fan Charts And Performance

Supply Fan Performance

Total Volume (CFM)	External SP (in. wg)	Total SP (in. wg)	RPM	Operating Power (hp)	Motor		Fan		
					Qty	Size (hp)	Qty	Type	Drive-Type
2,141	1	1.803	1310	1.22	1	1-1/2	1	Forward Curve	Belt

Pressure Drop (in. wg)

Weatherhood	Filter	Damper	Cooling	Heating	External	Total
0.102	-	0.076	-	0.625	1	1.803

Sound Performance in Accordance with AMCA

Sound Power by Octave Band								Lwa	dBA	Sones
62.5	125	250	500	1000	2000	4000	8000			
92	93	81	73	71	69	67	61	81	70	17.9

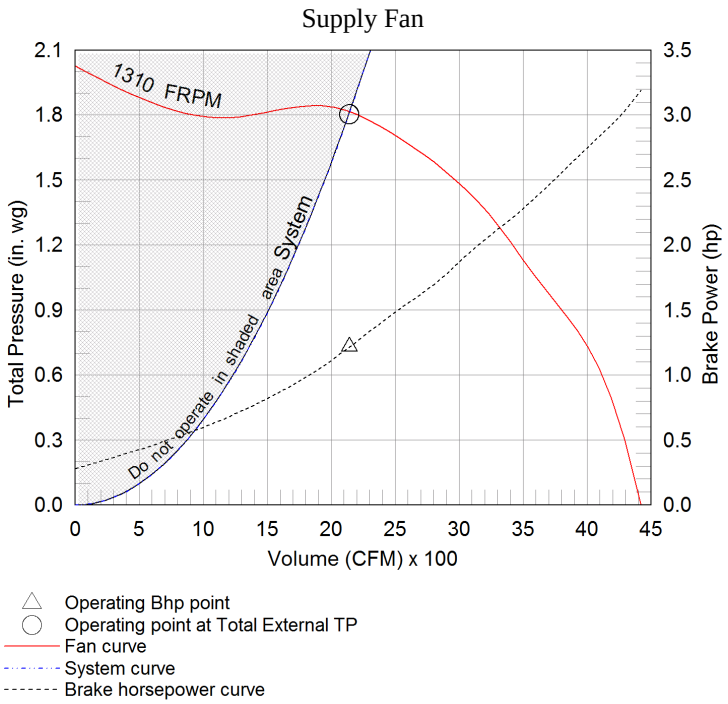

Heating Specifications

Heating Performance

Type	Gas Type	Gas Pressure		Capacity (MBH)		Temperature Rise (°F)	Performance	
		Min (in. wg)	Max (Psi)	Input	Output		EAT (°F)	LAT (°F)
Direct Gas	Natural	7	0.5	177.2	163.0	70.5	-16.0	55.0

Gas Train Details

Redundant Main Valves	Electronic Modulating Valve	Pilot Valve	Internal Regulator	Visual Indication Valve	Proof of Closure Valve	Hydraulic Main Valve(s)	Gas Pressure Switch(es)	External Regulator
Std	Std	Std	Std	-	-	-	-	-

Additional Heating Information

Agency Approvals			Temperature Control	Flame Sensing	Ignition Control	CO2 Sensor	Flame Safeguard Display
ETL and IRI	FM Approved	Minnesota Code					
Std	-	-	Discharge	Flame Rod	Pilot	-	-

Unit Details
92% thermal efficiency
Cast aluminum burner manifold with stainless steel mixing plates
Electronic modulation burner control

10 second pre-purge sequence
Low fire start

Gas Connections

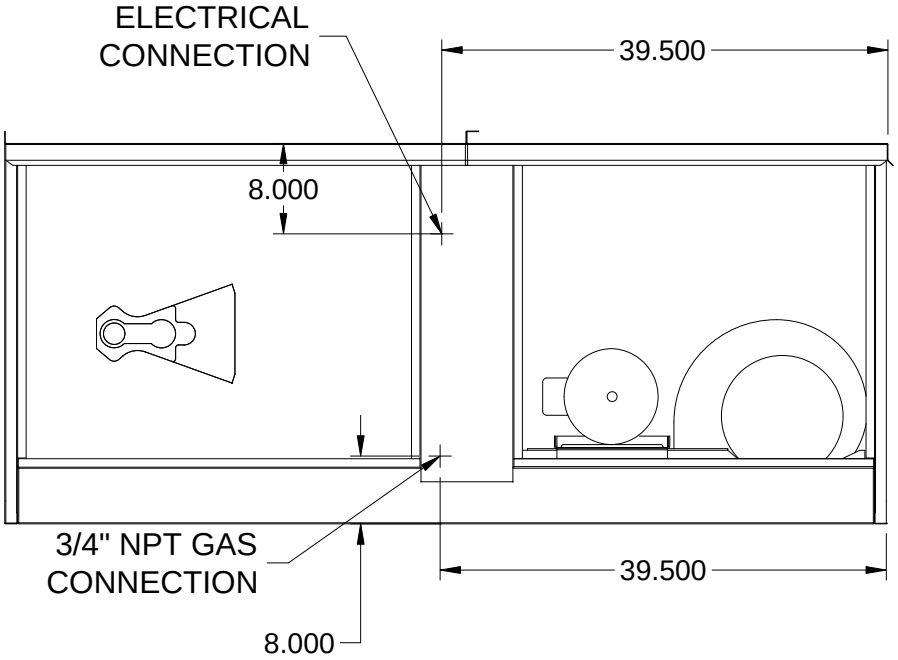

ELEVATION VIEW

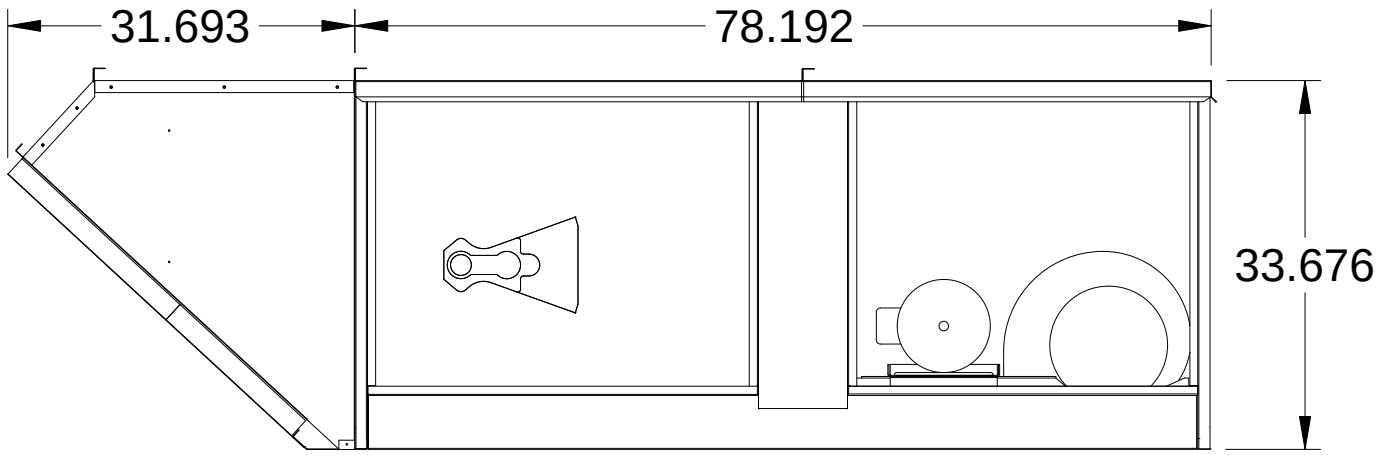

Notes - Elevation View
Standard configuration for unit access is on the right-hand side, when looking into the unit intake in the direction of airflow.
Order of unit sections is from intake of unit to discharge of unit.
Sections included on this unit: Weatherhood Section, Heating Section
Insulation: Double Wall, from Burner Section through end of unit.

PLAN VIEW

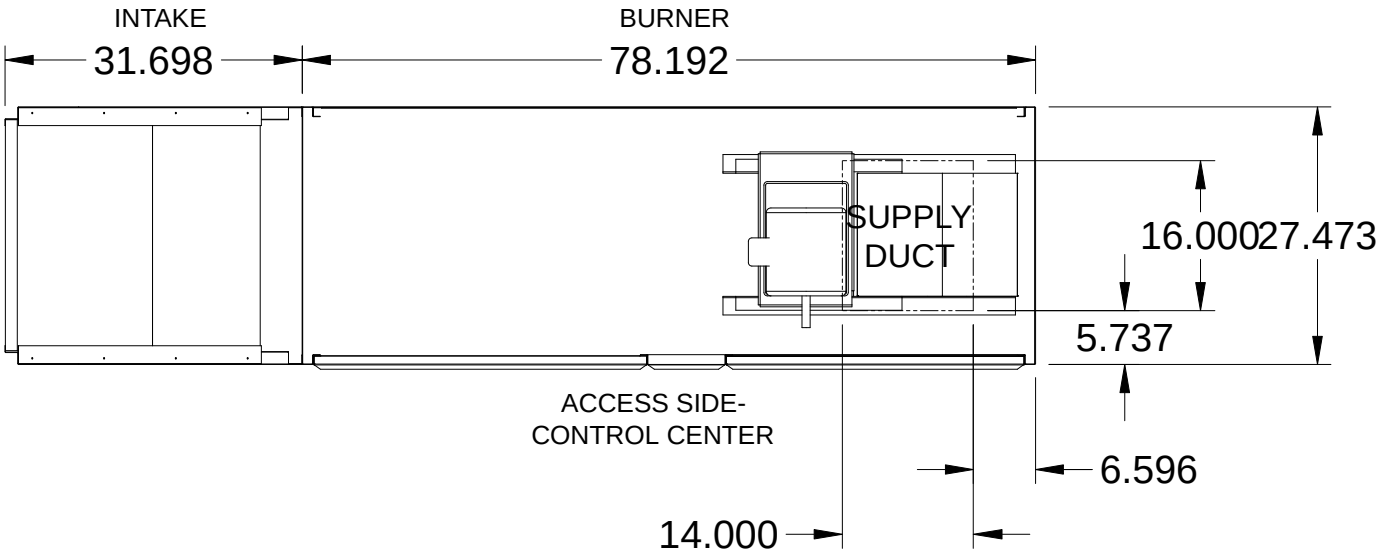

Notes - Plan View
Standard configuration for unit access is on the right-hand side, when looking into the unit intake in the direction of airflow.

END VIEW

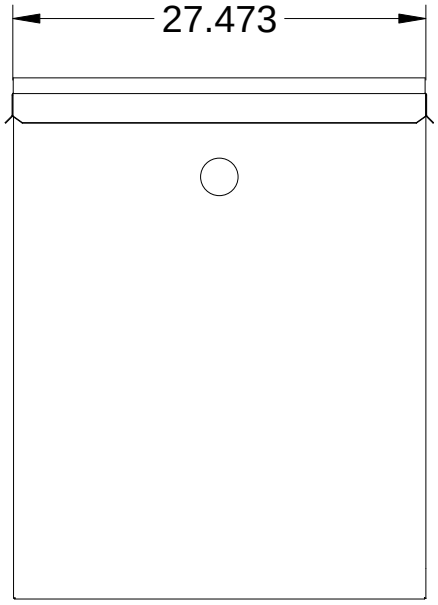

FOOTPRINT VIEW

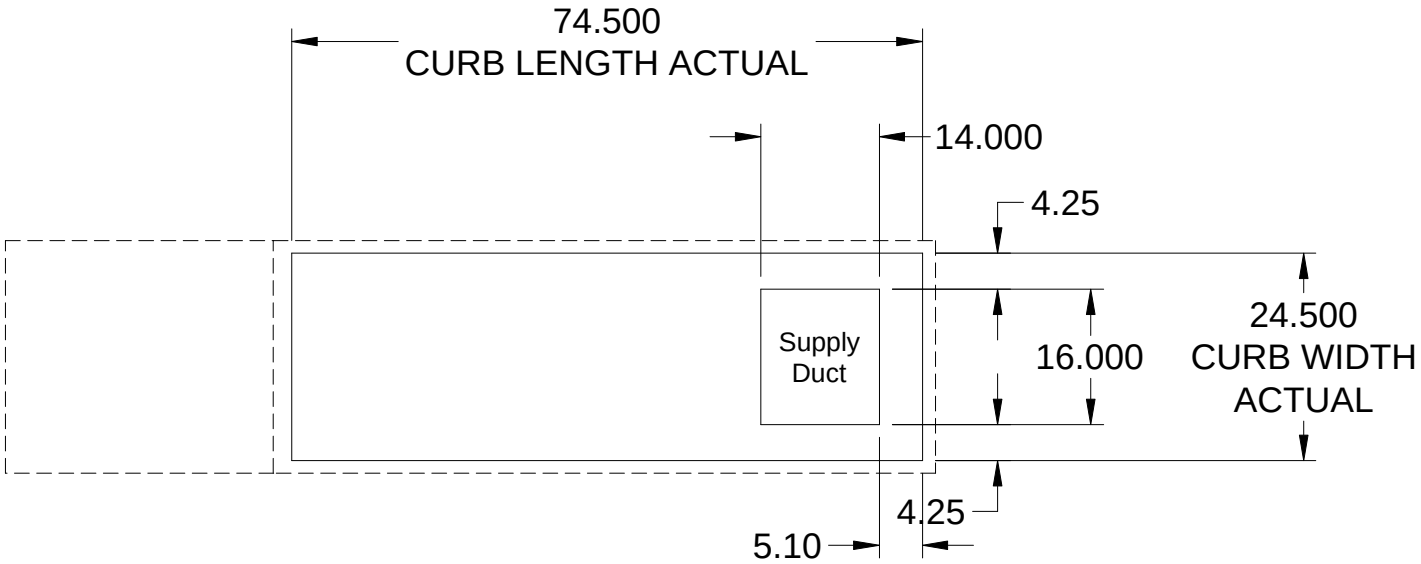

Notes - Footprint View
Minimum Roof Opening: The minimum roof opening size is the illustrated duct diameter plus 0.25 in. on all sides. For example: If the duct size is 14 x 14 in. square, the minimum roof opening size is 14.5 x 14.5 in. square.
Maximum Roof Opening: There must be a minimum perimeter of 1.75 in. between the roof opening and the roof curb. For example: If the roof curb is 75 x 30 in. square, the maximum roof opening is 71.5 x 26.5 in. inches square.
The weatherhood and filter sections of the make-up air unit extend beyond the curb. This is by design, to prevent water infiltration.

CURB VIEW

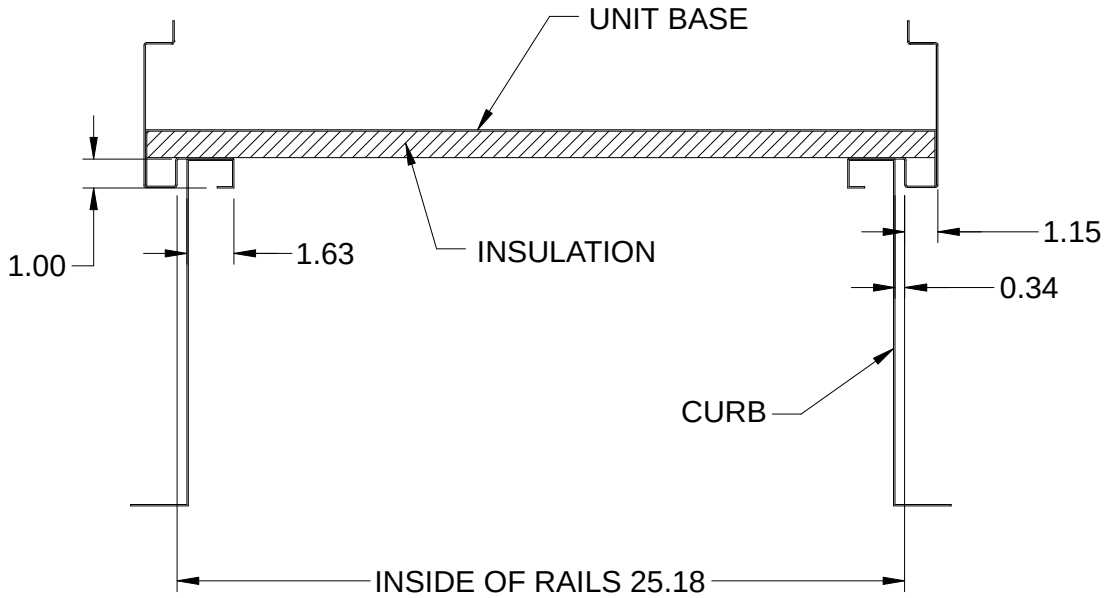

Notes - Curb View
All dimensions shown are in in.'s.
Curb Dimenision: Length = 74.5 in. Width = 24.5 in. Height = 20 in.

Clearance Specifications

Recommended Minimum Combustible Clearances				
	Floor (in.)	**Top (in.)**	**Sides (in.)**	**Ends (in.)**
Insulated Units	0	0	0	0
Non-Insulated Units	0	6	6	6

Notes - Combustible Clearances

Clearance to combustibles is defined as the minimum distance required between the heating source and the adjacent combustible surfaces to ensure the adjacent surface's temperature does not exceed 90 F above the ambient temperature.

Recommended Minimum Service Clearances	
Housing 32 and less (in.)	**Housing 35 and higher (in.)**
42 on the controls side of the unit	48 on the controls side of the unit

Notes - Service Clearances

To ensure ample space for component removal (evaporative cooling media, coils, filters, etc.), service clearances should be 6 in. wider than the width of the module itself.

Wiring Diagram

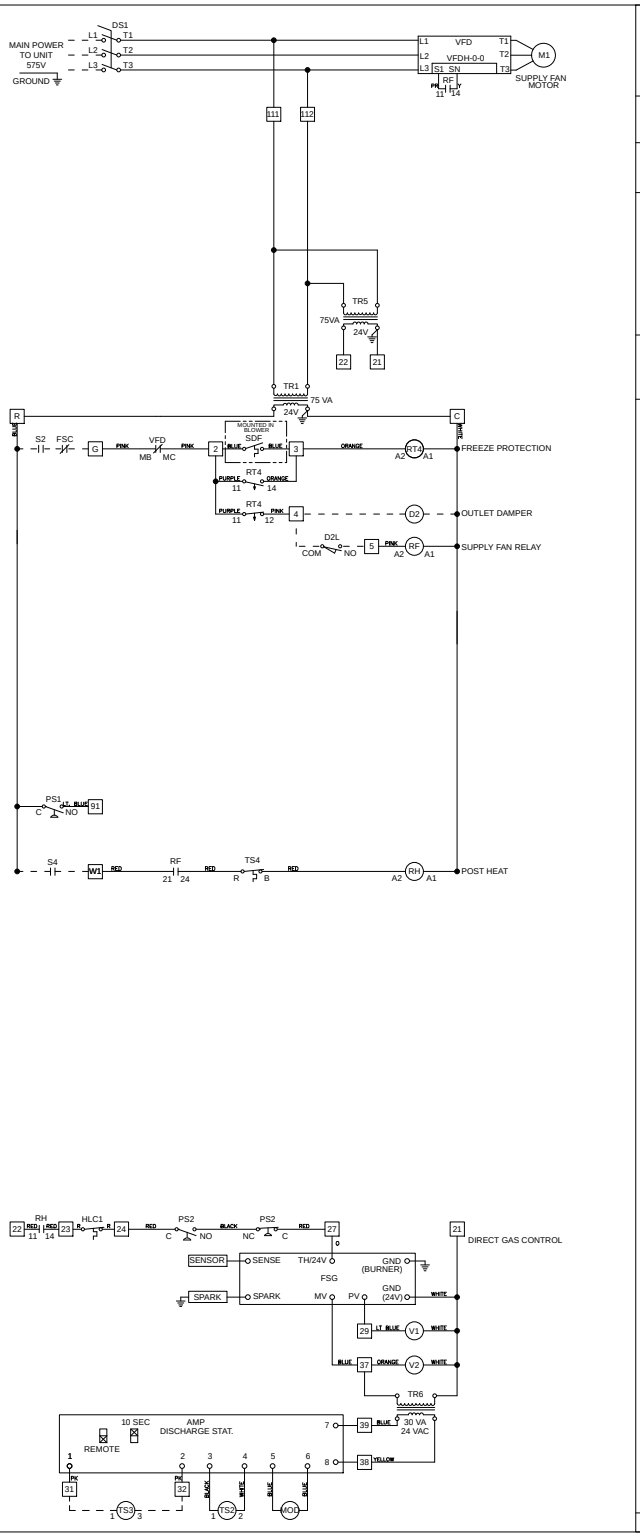

GREENHECK
Building Value in Air.

Wiring Diagram Code:

GD61N701D040N51AM19

CAUTION

UNIT SHALL BE GROUNDED IN ACCORDANCE WITH N.E.C.
POWER MUST BE OFF WHILE SERVICING.

NOTES

USE COPPER CONDUCTORS ONLY
60° C FOR TERMINALS RATED LESS THAN 100 AMPS.
75° C FOR TERMINALS RATED 100 AMPS OR MORE.

FIELD CONTROL WIRING RESISTANCE SHOULD NOT EXCEED 0.75 OHM.

FIELD WIRED – – – – –
FACTORY SUPPLIED AND WIRED ————

WIRE COLOR CODE

BK	BLACK	BL	BLUE	BR	BROWN
GY	GRAY	LT BL	LIGHT BLUE	O	ORANGE
PK	PINK	PR	PURPLE	R	RED
W	WHITE	Y	YELLOW		

LEGEND

AMP	AMPLIFIER
D2	OUTLET DAMPER
D2L	OUTLET DAMPER LIMIT
DS1	MAIN DISCONNECT SWITCH
FSC	FIRE SYSTEM CONTACT
FSG	FLAME SAFE GUARD
HLC	HIGH LIMIT CONTROL
M#	MOTOR
MOD	MODULATING VALVE
OL#	MOTOR OVERLOAD
PS1	DIRTY FILTER SWITCH
PS2	AIR PROVING SWITCH
RF	SUPPLY FAN RELAY
RF1	FAN ENABLE RELAY
RH	HEAT RELAY
RT4	FREEZE PROTECTION TIMER SWITCH 1 and 4 DOWN - 2 and 3 UP / DIAL SET TO 4
S2	FAN SWITCH
S4	HEAT AND COOL SWITCH
SDF	SENSOR DISCHARGE - FREEZE
SG	SPARK GENERATOR
ST#	MOTOR STARTER
TR#	TRANSFORMER
TS2	DISCHARGE AIR SENSOR
TS3	TEMPERATURE SELECTOR
TS4	INLET AIR SENSOR - HEAT
V1	PILOT VALVE
V2	MAIN VALVE
VFD	VARIABLE FREQUENCY DRIVE

Wiring Template: M19 DOC NUMBER: ---- REV: ----

Manufacturer reserves the right to change, modify, or improve this product at anytime

OUTLET DAMPER

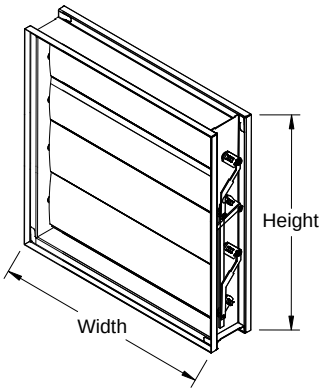

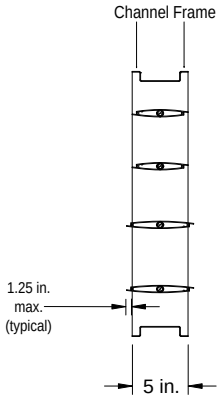

Notes: All dimensions shown are in units of inches. Width & Height furnished approximately 0.25 under size. Installation instructions available at www.greenheck.com. Customer supplied actuators configured with a jackshaft will be provided with a jackshaft this is one inch in diameter.

QTY	WIDTH	HEIGHT
1	14 in.	16 in.

NOTE: Width and Height are shown in nominal dimensions

Application & Design

The model VCD-34 is a low leakage control damper with thermally insulated blades. This model is intended for application in medium pressure and velocity systems. Non-jackshafted dampers will be supplied with a blade drive lever for internal actuator mounting. When external actuator mounting is specified, an extension pin with clip kit will be provided. Note: The extension pin with clip kit includes extension pin and clip.

Ratings

Pressure:	Up to 10 in. wg pressure differential
Velocity:	4,000 ft/min
Leakage:	Class 1A @ 1 in. wg, Class 1 @ up to 8 in. wg
Temperature:	Up to 250F

Manufacturer reserves right to change, alter, or improve this product at any time.

Roof Curb - GPI

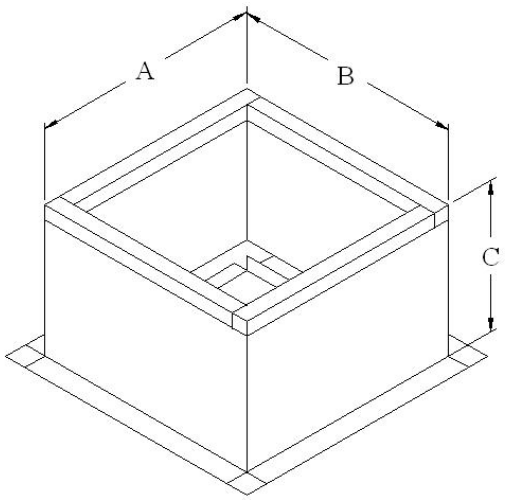

Roof Curb Dimensions		
Dimension	**Description**	**Value (in.)**
A	Length	74.5
B	Width	24.5
C	Height	20

GPI Curb Weight	64 lb

Construction Features and Notes
All Dimensions are actual.
Galvanized steel (18 ga.)
Straight sided with 2(in.) and wood nailer.
1 in., 3 lb. density insulation
The Roof Opening Dimension may NOT match the Structural Roof Support Dimension.
Curbs with length greater than 111.5 may ship knocked-down, dependent on manufacturing location.

Corner Weights

138 lb 123 lb

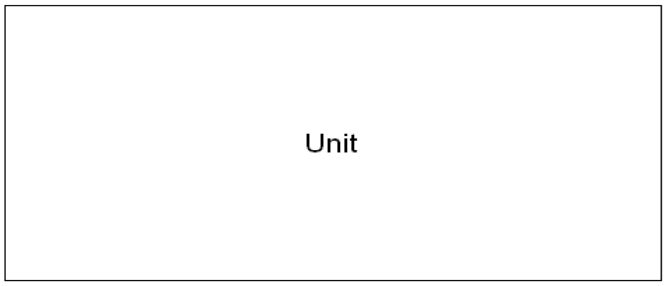

152 lb 136 lb

TSCP - Remote Control Panel

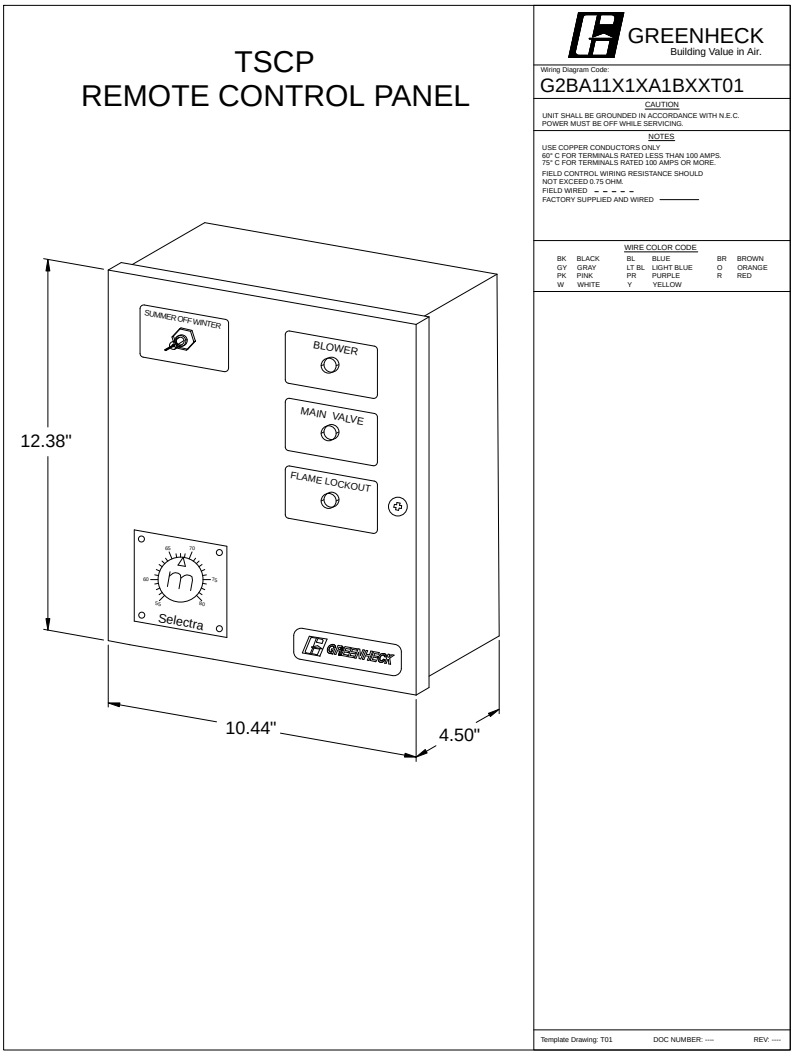

Standard Construction Features And Notes
Location of switches, lights and controls may vary.
All dimensions shown are in units of inches.
Galvanized steel with baked enamel finish.
Numbered terminal strip to match unit wiring.

Remote Panel Wiring Requirements

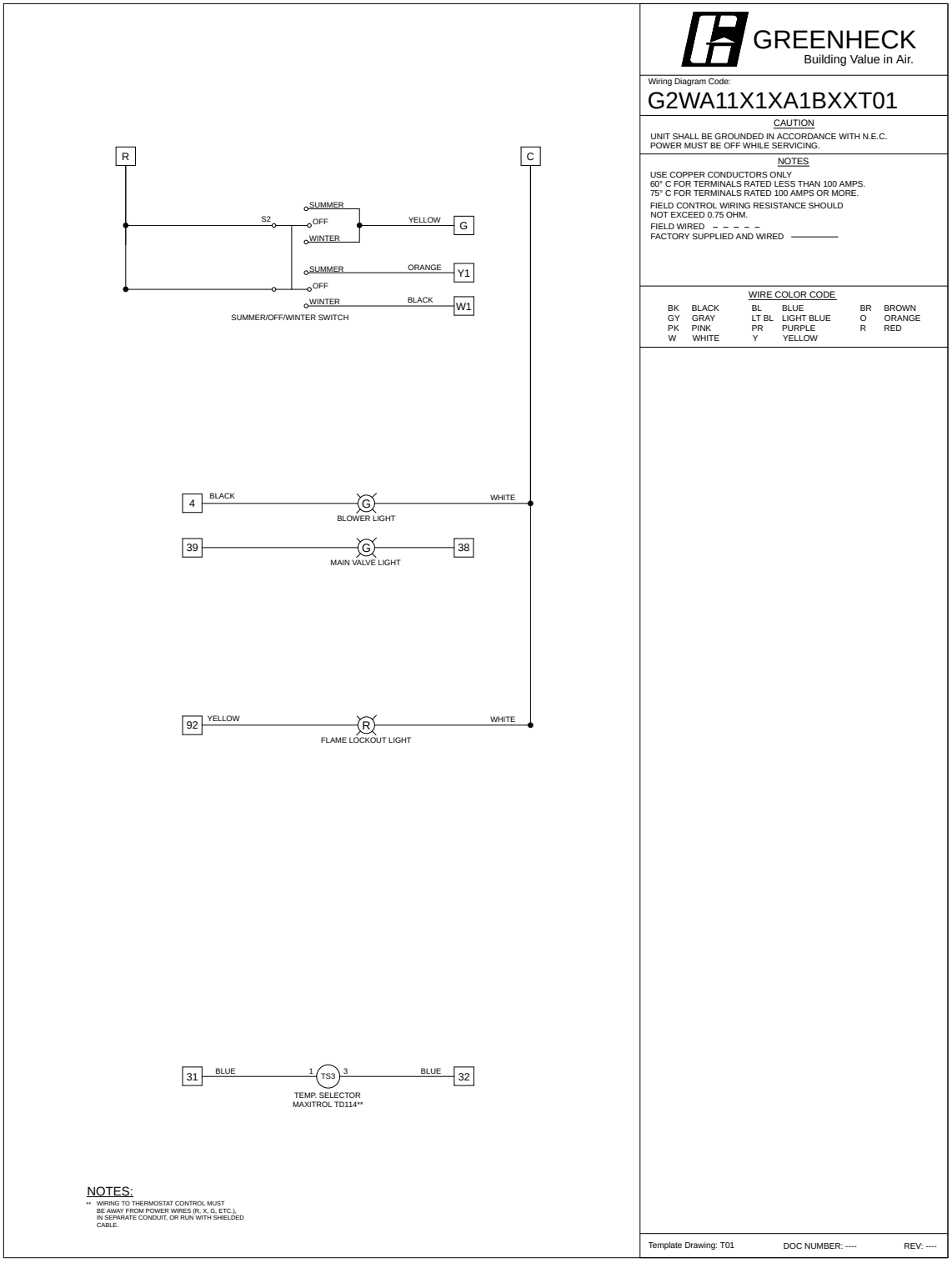

The wiring drawings details the number of the wires and the type of wire that needs to be run from the unit control center to the panel. A detailed wiring schematic will be provided with the panel when the unit ships.

SEQUENCE OF OPERATIONS

Unit Controls
The unit shall be provided from the factory with:

- 24VAC Transformer
- Terminal Strip
- Supply fan VFD
- Factory provided, field installed supply air insulated outlet damper with actuator
- Remote Control Panel

Remote Control Panel
A Permatector coated NEMA-1 rated remote control panel shall be shipped loose to control the basic operation of the unit. The panel shall contain the following:

- Summer / Off / Winter Switch
  Summer: Supply fan is enabled, heat is disabled.
  Off: Supply fan is disabled.
  Winter: Supply fan is enabled, heat is enabled.
- Blower Light
- Main Valve Light
- Dirty Filter Light

Unit Start-Up Sequence

- Supply Fan Enable Is Received
- Supply air outlet damper actuator is energized
- Supply air outlet damper actuator limit switch is proven closed
- Supply Fan Is Enabled

Supply Fan Sequence
The unit has been provided with a factory mounted variable frequency drive (VFD). The variable frequency drive shall control the supply fan speed as indicated by the following sequence:

Constant Volume
The VFD shall be programmed from the factory for a constant supply fan speed. This is to be adjusted for air balancing only and is not to be modulated.

Heating Control
A heating enable signal must be present and the supply fan must enabled before the unit will enable heating.

Heating Inlet Air Sensor (Heating Lockout)
The heating will be locked out when the outside air temperature is above the heating inlet air sensor set point (typical 65 F, adj.)

Direct Gas Fired Heating (Discharge Control)
The gas control amplifier located in the unit shall modulate the heating to maintain a supply temperature set point (55 F-90 F, adj.).

- A remote panel mounted set point dial shall control the supply temperature set point.

Building Freeze Protection
If the supply air temperature drops below 35 F for 300s (adj.), the supply fan will be disabled. Cycling the fan enable will reset the timer. This sequence is intended to prevent the unit from supply cold air into the building.

Warranty Statement for Make-Up Air

Unit Warranty

Greenheck warrants the equipment to be free from defects in material and workmanship for a period of 1 year (standard) from the shipment date.

DG Burner Extended Warranty

The warranty does not include items deemed as consumable components, including, but not limited to: Igniters, Spark rods, Spark generator, Flame rods,Flame wires, UV eye components, and associated components.

Note: Rust, discoloration of the burner material and cracks or holes smaller than .75 in. is not qualification for a defective burner.

Warranty Notes

Any component which proves defective during the warranty period will be repaired or replaced at Greenheck's sole option when returned to our factory, transportation prepaid. All warranties do not include labor costs associated with troubleshooting, removal, or installation. Greenheck will not be liable for any consequential, punitive, or incidental damages resulting from use, repair, or operation of any Greenheck product. These warranties are exclusive and are in lieu of all other warranties, whether written, oral, or implied, including the warranty of merchantability and the warranty of fitness for a particular purpose. No person (including any agent or salesperson) has authority to expand Seller's obligation beyond the terms of this warranty, or to state that the performance of the product is other than that published by Seller.

As a result of our commitment to continuous improvement, Greenheck reserves the right to change specifications without notice.

DG-P115-H05-VFD

Unit Performance

Design Conditions

Elevation (ft)	Summer		Winter (°F)	Supply (CFM)	Outdoor Air (CFM)
	DB (°F)	WB (°F)			
374	87.1	73.5	-15.0	1,800	1,800

Unit Specifications

Qty	Weight (lb)	Cooling Type	Heating Type	Unit Installation	Unit ETL Listing
1	403 (+/- 5%)	None	Direct Gas-Fired	Outdoor/Indoor	ANSI Z83.4 / CSA 3.7

Configuration

Unit Orientation	Unit Configuration	Outdoor Air Intake	Return Air Intake	Supply Air Discharge
Horizontal	Constant Volume 100% OA	End	-	Bottom

Heating Specifications

Type	Gas Type	Gas Pressure		Capacity (MBH)		Temperature Rise (°F)	Performance	
		Min (in. wg)	Max (Psi)	Input	Output		EAT (°F)	LAT (°F)
Direct Gas	Natural	7	0.5	147.9	136.1	70.0	-15.0	55.0

Air Performance

Type	Total Volume (CFM)	External SP (in. wg)	Total SP (in. wg)	RPM	Operating Power (hp)	Fan			
						Qty	Type	Size (in.)	Drive-Type
Supply	1,800	1	1.996	1832	1.25	1	Plenum	15	Direct-Drive

Motor Specifications

Motor	Qty	Size (hp)	Enclosure	Efficiency	RPM
Supply Fan Motor	1	1-1/2	ODP	NEMA Premium	1725

Electrical Specifications

Power Supply	Rating (V/C/P)	MCA (A)	MOP (A)
Unit	208/60/3	8.9	15

CONSTRUCTION FEATURES AND ACCESSORIES

Unit	
Unit Installation - Indoor or Outdoor	Std
Unit Construction - Double Wall	X
Wall Insulation - 1in. fiberglass - Heat source on	X
Base Insulation - 1in. fiberglass - entire unit base pan	Std
Corrosion Resistant Fasteners	Std
Access and Connections - Right side when facing intake	X
Service Access - Removable lift off panels	X
Unit Finish - Permatector ASTM B117 salt spray 2500 hours	X
Finish Color - Concrete Gray (RAL 7023)	X
Supply Fan - Direct-drive, backward-curved plenum	X
Supply Fan and Motor Vibration isolation - Neoprene	X
Controls	
Unit Controls - Terminal strip with remote panel	X
Remote Panel - Industrial (NEMA-1)	X
Temperature Control - Discharge control	X
Supply Fan VFD - VFD by factory	X
Supply Fan Control - Constant Volume	X
Melink/Vari-Flow wiring package	
Recirculation Control	
Unoccupied Mode (Night Setback)	
Control Accessories	
Heating Inlet Air Sensor	X
Cooling Inlet Air Sensor	
Dirty Filter Switch	X
Fire Stat Type III (Ships loose)	
120V/24V Smoke Detector (Ships loose)	
Inlet Damper End Switch	
External Cooling Lockout Relay	
Freeze Protection (Supply Air Low Limit)	X
Auxiliary Supply Starter Contacts	
Auxiliary Exhaust Starter Contacts	
Airflow Proving Monitoring Contact	

Accessories	
Factory Installed, Lockable, NEMA 3R Disconnect	Std
Weatherhood - Aluminum Mesh filtered	X
Supply Air Filters	
Outdoor Air Inlet Damper	
Supply Air Outlet Damper - Insulated, low leakage	X
Diffuser	
Roof Curb - GPI	X
Combination Curb	
Spare Belts	
Spare Filters	
Motor with Shaft Grounding	
Service Outlet - Shipped loose	X
Gas Heating Accessories	
Pilot Ignition	Std
Flame Sensing - Flame rod	X
Flame Safeguard Display	
Agency Approval - ETL and IRI	Std
FM Approved	
Minnesota Code Requirements	
High Gas Pressure Switch	
Low Gas Pressure Switch	
Visual Indication Valves	
External Gas Pressure Regulator (Ships loose)	
Warranty Options	
Unit Warranty - 1 Year	X
5 Year Burner Warranty	
10 Year Burner Warranty	

Standard Option	Std
Not Included	
Included	X

Fan Charts And Performance

Supply Fan Performance

Total Volume (CFM)	External SP (in. wg)	Total SP (in. wg)	RPM	Operating Power (hp)	Motor		Fan		
					Qty	Size (hp)	Qty	Type	Drive-Type
1,800	1	1.996	1832	1.25	1	1-1/2	1	Plenum	Direct

Pressure Drop (in. wg)

Weatherhood	Filter	Damper	Cooling	Heating	External	Total
0.146	-	-	-	0.85	1	1.996

Sound Performance in Accordance with AMCA

Sound Power by Octave Band								Lwa	dBA	Sones
62.5	125	250	500	1000	2000	4000	8000			
81	79	83	79	67	58	53	52	79	68	15.8

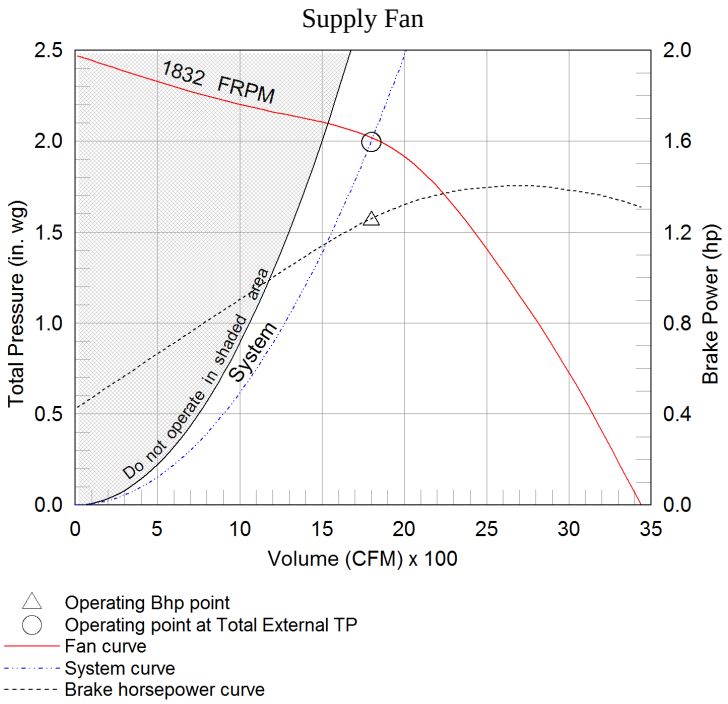

Heating Specifications

Heating Performance

Type	Gas Type	Gas Pressure		Capacity (MBH)		Temperature Rise (°F)	Performance	
		Min (in. wg)	Max (Psi)	Input	Output		EAT (°F)	LAT (°F)
Direct Gas	Natural	7	0.5	147.9	136.1	70.0	-15.0	55.0

Gas Train Details

Redundant Main Valves	Electronic Modulating Valve	Pilot Valve	Internal Regulator	Visual Indication Valve	Proof of Closure Valve	Hydraulic Main Valve(s)	Gas Pressure Switch(es)	External Regulator
Std	Std	Std	Std	-	-	-	-	-

Additional Heating Information

Agency Approvals			Temperature Control	Flame Sensing	Ignition Control	CO2 Sensor	Flame Safeguard Display
ETL and IRI	FM Approved	Minnesota Code					
Std	-	-	Discharge	Flame Rod	Pilot	-	-

Unit Details
92% thermal efficiency
Cast aluminum burner manifold with stainless steel mixing plates
Electronic modulation burner control

10 second pre-purge sequence
Low fire start

Gas Connections

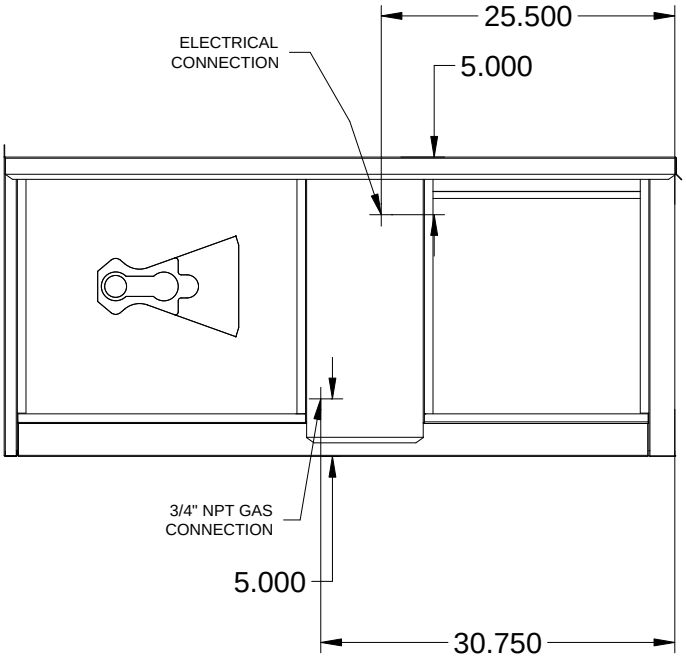

ELEVATION VIEW

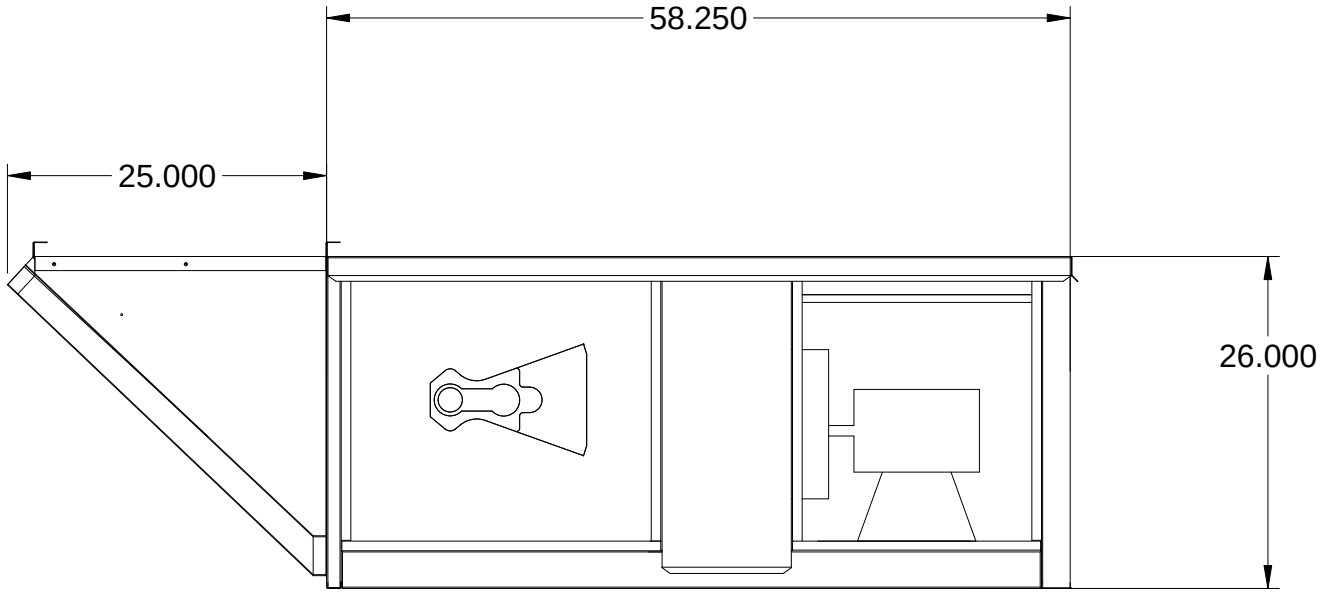

Notes - Elevation View
Standard configuration for unit access is on the right-hand side, when looking into the unit intake in the direction of airflow.
Order of unit sections is from intake of unit to discharge of unit.
Sections included on this unit: Weatherhood Section, Heating Section
Insulation: Double Wall, from Burner Section through end of unit.

PLAN VIEW

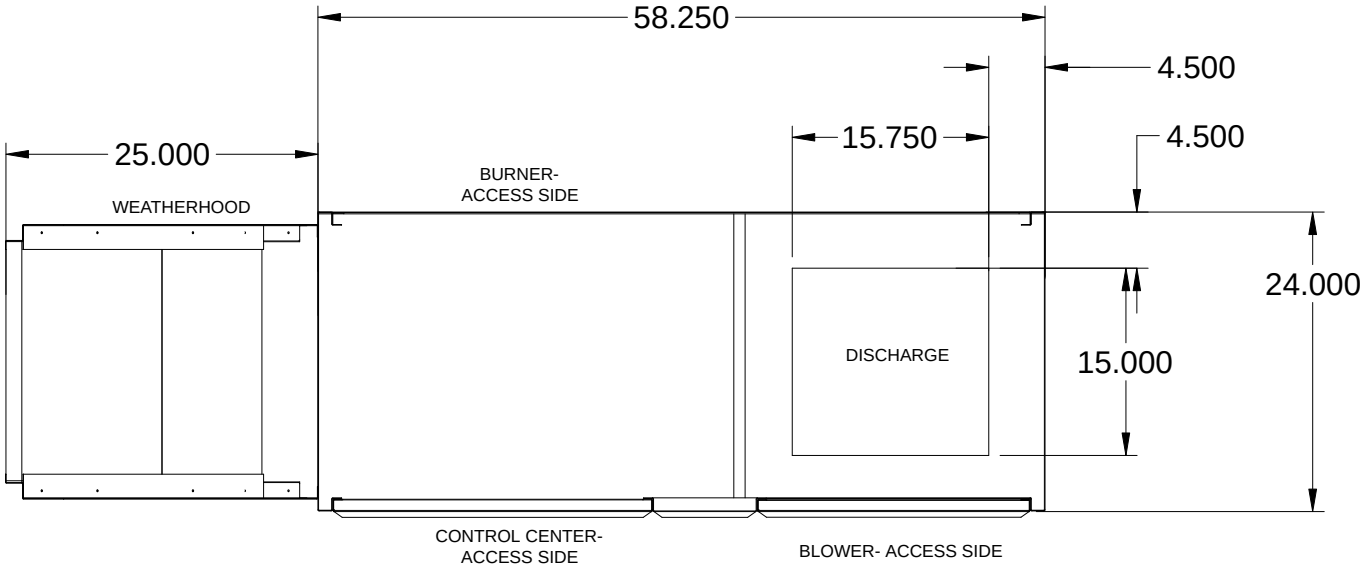

Notes - Plan View
Standard configuration for unit access is on the right-hand side, when looking into the unit intake in the direction of airflow.

END VIEW

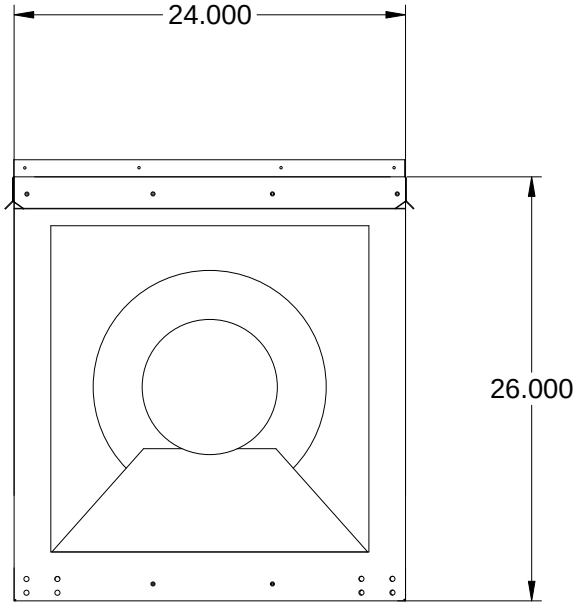

FOOTPRINT VIEW

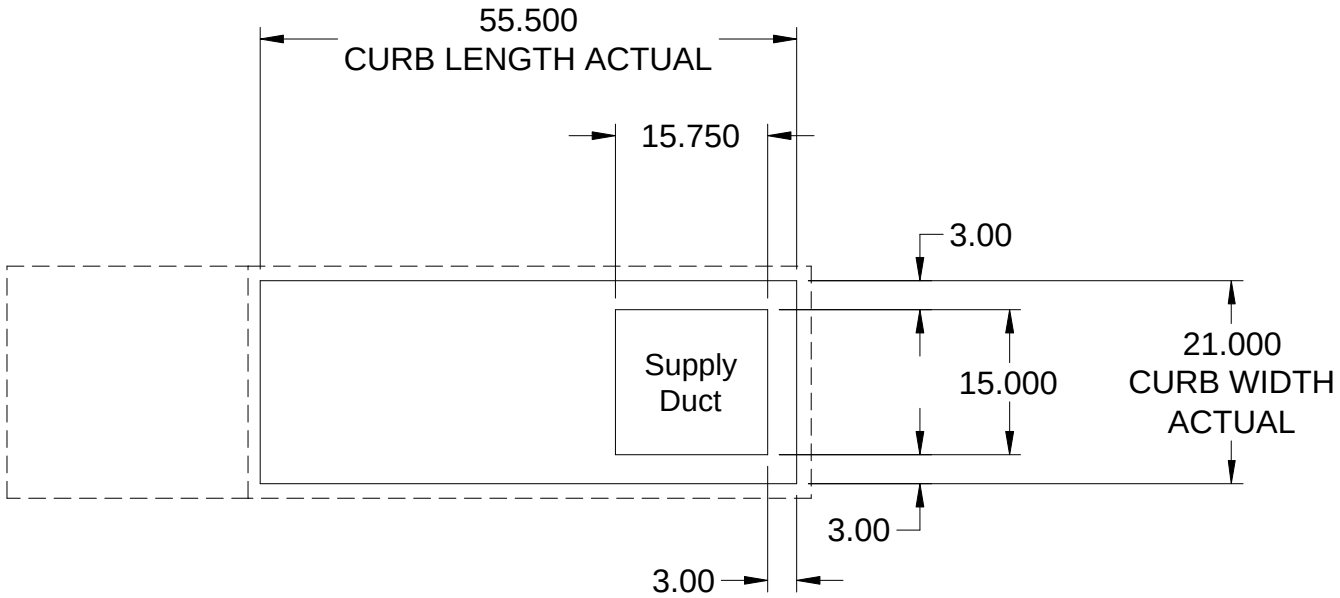

Notes - Footprint View
Minimum Roof Opening: The minimum roof opening size is the illustrated duct diameter plus 0.25 in. on all sides. For example: If the duct size is 14 x 14 in. square, the minimum roof opening size is 14.5 x 14.5 in. square.
Maximum Roof Opening: There must be a minimum perimeter of 1.75 in. between the roof opening and the roof curb. For example: If the roof curb is 75 x 30 in. square, the maximum roof opening is 71.5 x 26.5 in. inches square.
The weatherhood and filter sections of the make-up air unit extend beyond the curb. This is by design, to prevent water infiltration.

CURB VIEW

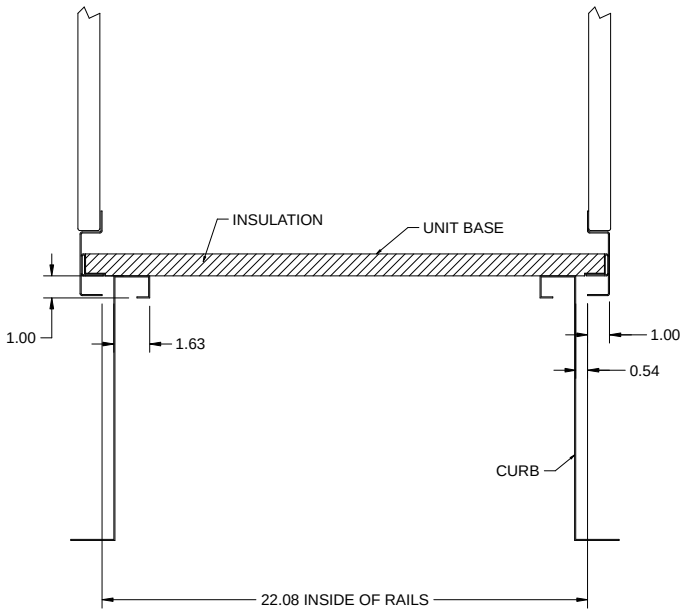

Notes - Curb View
All dimensions shown are in in.'s.
Curb Dimenision: Length = 55.5 in. Width = 21 in. Height = 20 in.

Clearance Specifications

Recommended Minimum Combustible Clearances				
	Floor (in.)	**Top (in.)**	**Sides (in.)**	**Ends (in.)**
Insulated Units	0	0	0	0
Non-Insulated Units	0	6	6	6

Notes - Combustible Clearances

Clearance to combustibles is defined as the minimum distance required between the heating source and the adjacent combustible surfaces to ensure the adjacent surface's temperature does not exceed 90 F above the ambient temperature.

Recommended Minimum Service Clearances	
Housing 32 and less (in.)	**Housing 35 and higher (in.)**
42 on the controls side of the unit	48 on the controls side of the unit

Notes - Service Clearances

To ensure ample space for component removal (evaporative cooling media, coils, filters, etc.), service clearances should be 6 in. wider than the width of the module itself.

Wiring Diagram

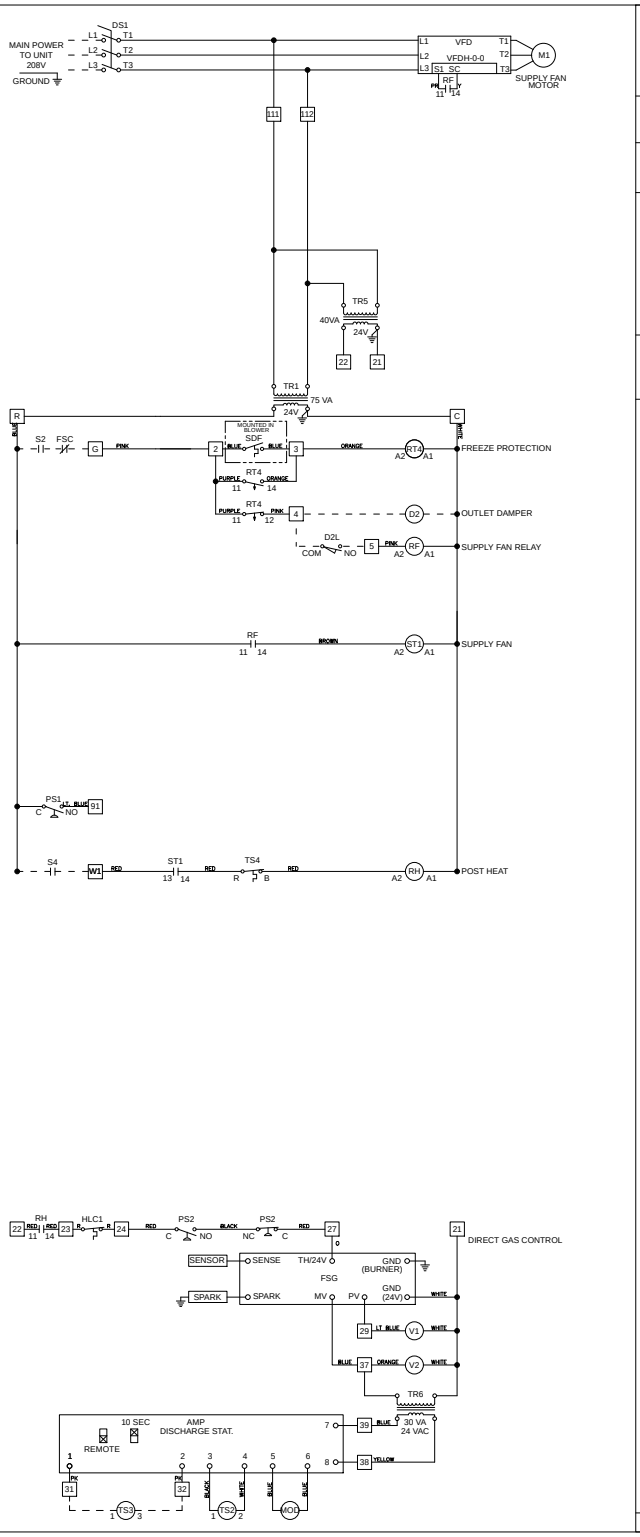

GREENHECK
Building Value in Air.

Wiring Diagram Code:

GD61N401N040N51AM19

CAUTION

UNIT SHALL BE GROUNDED IN ACCORDANCE WITH N.E.C.
POWER MUST BE OFF WHILE SERVICING.

NOTES

USE COPPER CONDUCTORS ONLY
60° C FOR TERMINALS RATED LESS THAN 100 AMPS.
75° C FOR TERMINALS RATED 100 AMPS OR MORE.

FIELD CONTROL WIRING RESISTANCE SHOULD NOT EXCEED 0.75 OHM.

FIELD WIRED – – – – –
FACTORY SUPPLIED AND WIRED ————

WIRE COLOR CODE

BK	BLACK	BL	BLUE	BR	BROWN
GY	GRAY	LT BL	LIGHT BLUE	O	ORANGE
PK	PINK	PR	PURPLE	R	RED
W	WHITE	Y	YELLOW		

LEGEND

AMP	AMPLIFIER
D2	OUTLET DAMPER
D2L	OUTLET DAMPER LIMIT
DS1	MAIN DISCONNECT SWITCH
FSC	FIRE SYSTEM CONTACT
FSG	FLAME SAFE GUARD
HLC	HIGH LIMIT CONTROL
M#	MOTOR
MOD	MODULATING VALVE
PS1	DIRTY FILTER SWITCH
PS2	AIR PROVING SWITCH
RF	SUPPLY FAN RELAY
RF1	FAN ENABLE RELAY
RH	HEAT RELAY
RT4	FREEZE PROTECTION TIMER SWITCH 1 and 4 DOWN - 2 and 3 UP / DIAL SET TO 4
S2	FAN SWITCH
S4	HEAT AND COOL SWITCH
SDF	SENSOR DISCHARGE - FREEZE
SG	SPARK GENERATOR
ST#	MOTOR STARTER
TR#	TRANSFORMER
TS2	DISCHARGE AIR SENSOR
TS3	TEMPERATURE SELECTOR
TS4	INLET AIR SENSOR - HEAT
V1	PILOT VALVE
V2	MAIN VALVE

Wiring Template: M19 DOC NUMBER: ---- REV: ----

Manufacturer reserves the right to change, modify, or improve this product at anytime

OUTLET DAMPER

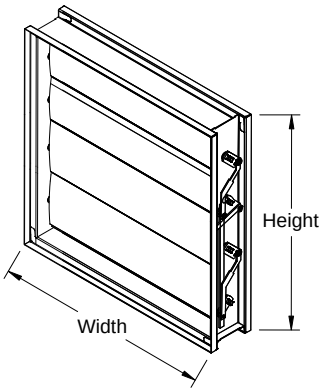

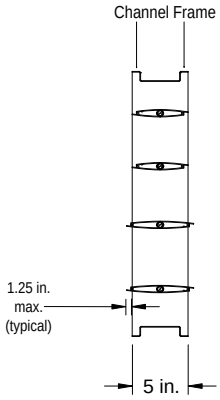

Notes: All dimensions shown are in units of inches. Width & Height furnished approximately 0.25 under size. Installation instructions available at www.greenheck.com. Customer supplied actuators configured with a jackshaft will be provided with a jackshaft this is one inch in diameter.

QTY	WIDTH	HEIGHT
1	19.5 in.	20 in.

NOTE: Width and Height are shown in nominal dimensions

Application & Design

The model VCD-34 is a low leakage control damper with thermally insulated blades. This model is intended for application in medium pressure and velocity systems. Non-jackshafted dampers will be supplied with a blade drive lever for internal actuator mounting. When external actuator mounting is specified, an extension pin with clip kit will be provided. Note: The extension pin with clip kit includes extension pin and clip.

Ratings

Pressure:	Up to 10 in. wg pressure differential
Velocity:	4,000 ft/min
Leakage:	Class 1A @ 1 in. wg, Class 1 @ up to 8 in. wg
Temperature:	Up to 250F

Manufacturer reserves right to change, alter, or improve this product at any time.

Roof Curb - GPI

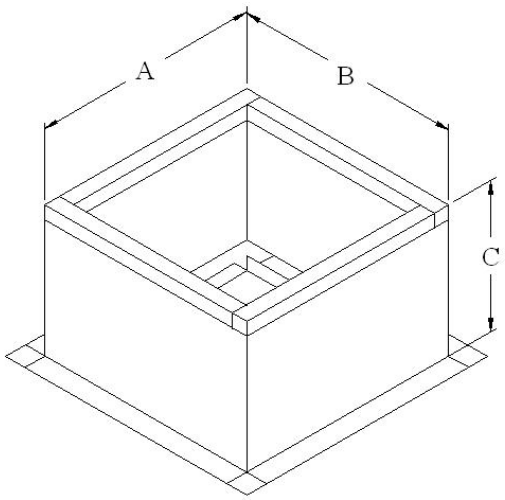

Roof Curb Dimensions		
Dimension	**Description**	**Value (in.)**
A	Length	55.5
B	Width	21
C	Height	20

GPI Curb Weight	49 lb

Construction Features and Notes
All Dimensions are actual.
Galvanized steel (18 ga.)
Straight sided with 2(in.) and wood nailer.
1 in., 3 lb. density insulation
The Roof Opening Dimension may NOT match the Structural Roof Support Dimension.
Curbs with length greater than 111.5 may ship knocked-down, dependent on manufacturing location.

Corner Weights

117 lb 58 lb

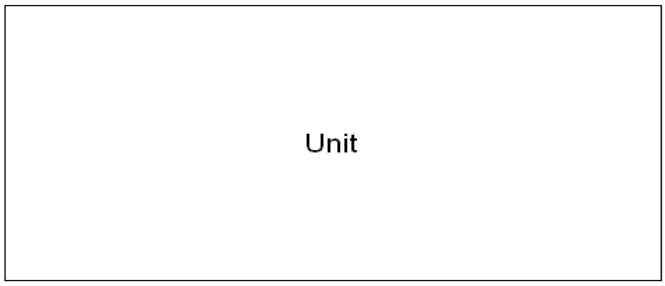

153 lb 76 lb

TSCP - Remote Control Panel

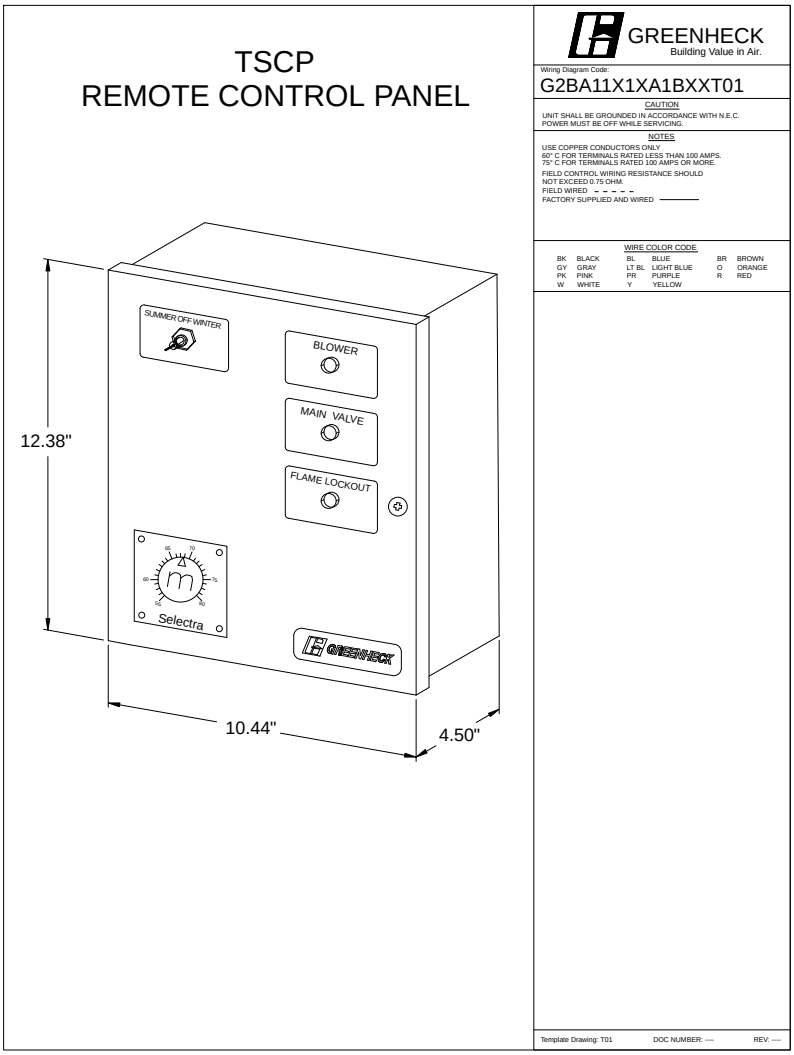

Standard Construction Features And Notes
Location of switches, lights and controls may vary.
All dimensions shown are in units of inches.
Galvanized steel with baked enamel finish.
Numbered terminal strip to match unit wiring.

Remote Panel Wiring Requirements

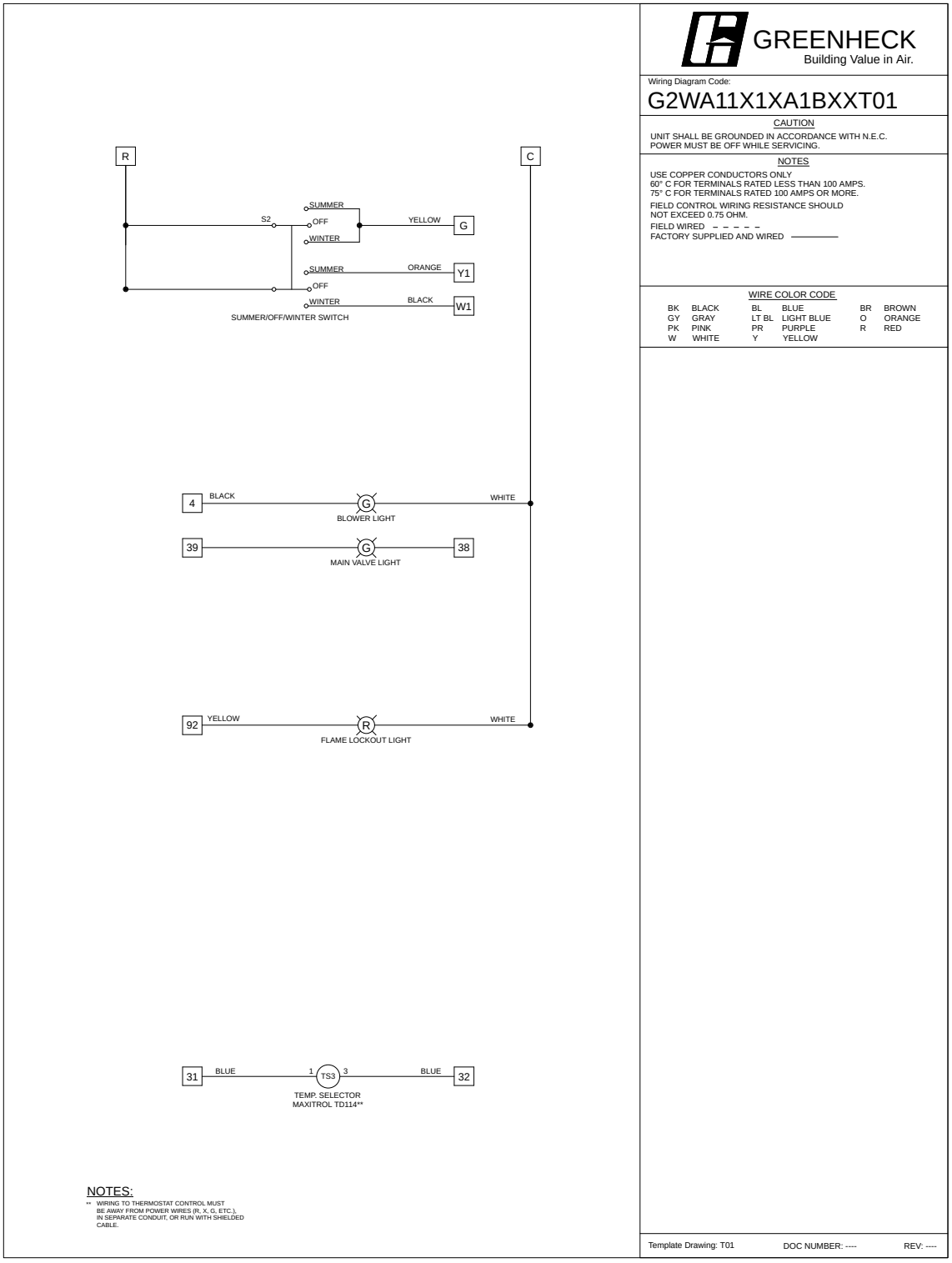

The wiring drawings details the number of the wires and the type of wire that needs to be run from the unit control center to the panel. A detailed wiring schematic will be provided with the panel when the unit ships.

SEQUENCE OF OPERATIONS

Unit Controls
The unit shall be provided from the factory with:

- 24VAC Transformer
- Terminal Strip
- Supply fan VFD
- Factory provided, field installed supply air insulated outlet damper with actuator
- Remote Control Panel

Remote Control Panel
A Permatector coated NEMA-1 rated remote control panel shall be shipped loose to control the basic operation of the unit. The panel shall contain the following:

- Summer / Off / Winter Switch
  Summer: Supply fan is enabled, heat is disabled.
  Off: Supply fan is disabled.
  Winter: Supply fan is enabled, heat is enabled.
- Blower Light
- Main Valve Light
- Dirty Filter Light

Unit Start-Up Sequence

- Supply Fan Enable Is Received
- Supply air outlet damper actuator is energized
- Supply air outlet damper actuator limit switch is proven closed
- Supply Fan Is Enabled

Supply Fan Sequence
The unit has been provided with a factory mounted variable frequency drive (VFD). The variable frequency drive shall control the supply fan speed as indicated by the following sequence:

Constant Volume
The VFD shall be programmed from the factory for a constant supply fan speed. This is to be adjusted for air balancing only and is not to be modulated.

Heating Control
A heating enable signal must be present and the supply fan must enabled before the unit will enable heating.

Heating Inlet Air Sensor (Heating Lockout)
The heating will be locked out when the outside air temperature is above the heating inlet air sensor set point (typical 65 F, adj.)

Direct Gas Fired Heating (Discharge Control)
The gas control amplifier located in the unit shall modulate the heating to maintain a supply temperature set point (55 F-90 F, adj.).

- A remote panel mounted set point dial shall control the supply temperature set point.

Building Freeze Protection
If the supply air temperature drops below 35 F for 300s (adj.), the supply fan will be disabled. Cycling the fan enable will reset the timer. This sequence is intended to prevent the unit from supply cold air into the building.

Warranty Statement for Make-Up Air

Unit Warranty

Greenheck warrants the equipment to be free from defects in material and workmanship for a period of 1 year (standard) from the shipment date.

DG Burner Extended Warranty

The warranty does not include items deemed as consumable components, including, but not limited to: Igniters, Spark rods, Spark generator, Flame rods,Flame wires, UV eye components, and associated components.

Note: Rust, discoloration of the burner material and cracks or holes smaller than .75 in. is not qualification for a defective burner.

Warranty Notes

Any component which proves defective during the warranty period will be repaired or replaced at Greenheck's sole option when returned to our factory, transportation prepaid. All warranties do not include labor costs associated with troubleshooting, removal, or installation. Greenheck will not be liable for any consequential, punitive, or incidental damages resulting from use, repair, or operation of any Greenheck product. These warranties are exclusive and are in lieu of all other warranties, whether written, oral, or implied, including the warranty of merchantability and the warranty of fitness for a particular purpose. No person (including any agent or salesperson) has authority to expand Seller's obligation beyond the terms of this warranty, or to state that the performance of the product is other than that published by Seller.

As a result of our commitment to continuous improvement, Greenheck reserves the right to change specifications without notice.

DG-110-H10

Unit Performance

Design Conditions

Elevation (ft)	Summer		Winter (°F)	Supply (CFM)	Outdoor Air (CFM)
	DB (°F)	WB (°F)			
374	87.1	73.5	-15.0	2,210	2,210

Unit Specifications

Qty	Weight (lb)	Cooling Type	Heating Type	Unit Installation	Unit ETL Listing
1	548 (+/- 5%)	None	Direct Gas-Fired	Outdoor/Indoor	ANSI Z83.4 / CSA 3.7

Configuration

Unit Orientation	Unit Configuration	Outdoor Air Intake	Return Air Intake	Supply Air Discharge
Horizontal	Constant Volume 100% OA	End	-	Bottom

Heating Specifications

Type	Gas Type	Gas Pressure		Capacity (MBH)		Temperature Rise (°F)	Performance	
		Min (in. wg)	Max (Psi)	Input	Output		EAT (°F)	LAT (°F)
Direct Gas	Natural	7	0.5	181.6	167.1	70.0	-15.0	55.0

Air Performance

Type	Total Volume (CFM)	External SP (in. wg)	Total SP (in. wg)	RPM	Operating Power (hp)	Fan			
						Qty	Type	Size (in.)	Drive-Type
Supply	2,210	1	1.815	1320	1.29	1	Forward Curve	10	Belt-Drive

Motor Specifications

Motor	Qty	Size (hp)	Enclosure	Efficiency	RPM
Supply Fan Motor	1	1-1/2	ODP	NEMA Premium	1725

Electrical Specifications

Power Supply	Rating (V/C/P)	MCA (A)	MOP (A)
Unit	208/60/3	8.9	15

CONSTRUCTION FEATURES AND ACCESSORIES

Unit	
Unit Installation - Indoor or Outdoor	Std
Unit Construction - Double Wall	X
Wall Insulation - 1in. fiberglass - Heat source on	X
Base Insulation - 1in. fiberglass - entire unit base pan	Std
Corrosion Resistant Fasteners	Std
Access and Connections - Right side when facing intake	X
Service Access - Removable lift off panels	X
Unit Finish - Permatector ASTM B117 salt spray 2500 hours	X
Finish Color - Concrete Gray (RAL 7023)	X
Supply Fan - Belt-drive, forward-curved	X
Supply Fan and Motor Vibration isolation - Neoprene	X
Controls	
Unit Controls - Terminal strip with remote panel	X
Remote Panel - Industrial (NEMA-1)	X
Temperature Control - Discharge control	X
Supply Fan VFD	
Supply Fan Control	
Melink/Vari-Flow wiring package	
Recirculation Control	
Unoccupied Mode (Night Setback)	
Control Accessories	
Heating Inlet Air Sensor	X
Cooling Inlet Air Sensor	
Dirty Filter Switch	X
Fire Stat Type III (Ships loose)	
120V/24V Smoke Detector (Ships loose)	
Inlet Damper End Switch	
External Cooling Lockout Relay	
Freeze Protection (Supply Air Low Limit)	X
Auxiliary Supply Starter Contacts	
Auxiliary Exhaust Starter Contacts	
Airflow Proving Monitoring Contact	

Accessories	
Factory Installed, Lockable, NEMA 3R Disconnect	Std
Weatherhood - Aluminum Mesh filtered	X
Supply Air Filters	
Outdoor Air Inlet Damper	
Supply Air Outlet Damper - Insulated, low leakage	X
Diffuser	
Roof Curb - GPI	X
Combination Curb	
Spare Belts	
Spare Filters	
Motor with Shaft Grounding	
Service Outlet - Shipped loose	X
Gas Heating Accessories	
Pilot Ignition	Std
Flame Sensing - Flame rod	X
Flame Safeguard Display	
Agency Approval - ETL and IRI	Std
FM Approved	
Minnesota Code Requirements	
High Gas Pressure Switch	
Low Gas Pressure Switch	
Visual Indication Valves	
External Gas Pressure Regulator (Ships loose)	
Warranty Options	
Unit Warranty - 1 Year	X
5 Year Burner Warranty	
10 Year Burner Warranty	

Standard Option	Std
Not Included	
Included	X

Fan Charts And Performance

Supply Fan Performance

Total Volume (CFM)	External SP (in. wg)	Total SP (in. wg)	RPM	Operating Power (hp)	Motor		Fan		
					Qty	Size (hp)	Qty	Type	Drive-Type
2,210	1	1.815	1320	1.29	1	1-1/2	1	Forward Curve	Belt

Pressure Drop (in. wg)

Weatherhood	Filter	Damper	Cooling	Heating	External	Total
0.109	-	0.081	-	0.625	1	1.815

Sound Performance in Accordance with AMCA

Sound Power by Octave Band								Lwa	dBA	Sones
62.5	125	250	500	1000	2000	4000	8000			
92	93	82	74	72	70	68	63	81	70	18.8

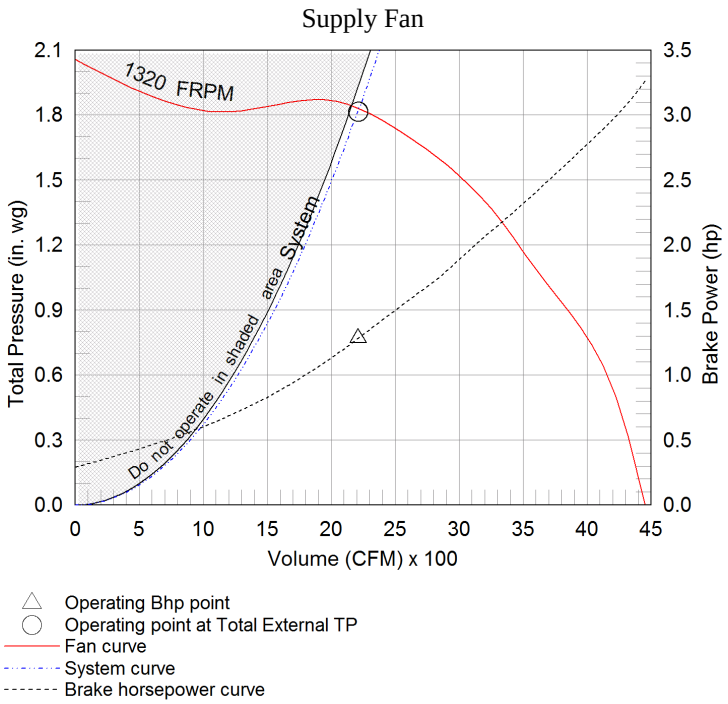

Heating Specifications

Heating Performance

Type	Gas Type	Gas Pressure		Capacity (MBH)		Temperature Rise (°F)	Performance	
		Min (in. wg)	Max (Psi)	Input	Output		EAT (°F)	LAT (°F)
Direct Gas	Natural	7	0.5	181.6	167.1	70.0	-15.0	55.0

Gas Train Details

Redundant Main Valves	Electronic Modulating Valve	Pilot Valve	Internal Regulator	Visual Indication Valve	Proof of Closure Valve	Hydraulic Main Valve(s)	Gas Pressure Switch(es)	External Regulator
Std	Std	Std	Std	-	-	-	-	-

Additional Heating Information

Agency Approvals			Temperature Control	Flame Sensing	Ignition Control	CO2 Sensor	Flame Safeguard Display
ETL and IRI	FM Approved	Minnesota Code					
Std	-	-	Discharge	Flame Rod	Pilot	-	-

Unit Details
92% thermal efficiency
Cast aluminum burner manifold with stainless steel mixing plates
Electronic modulation burner control

10 second pre-purge sequence
Low fire start

Gas Connections

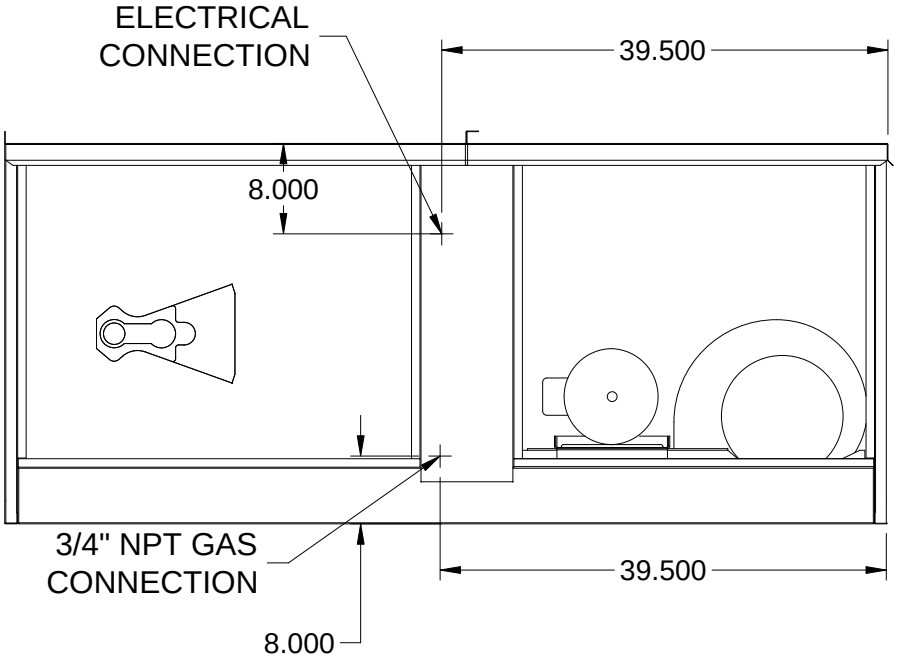

ELEVATION VIEW

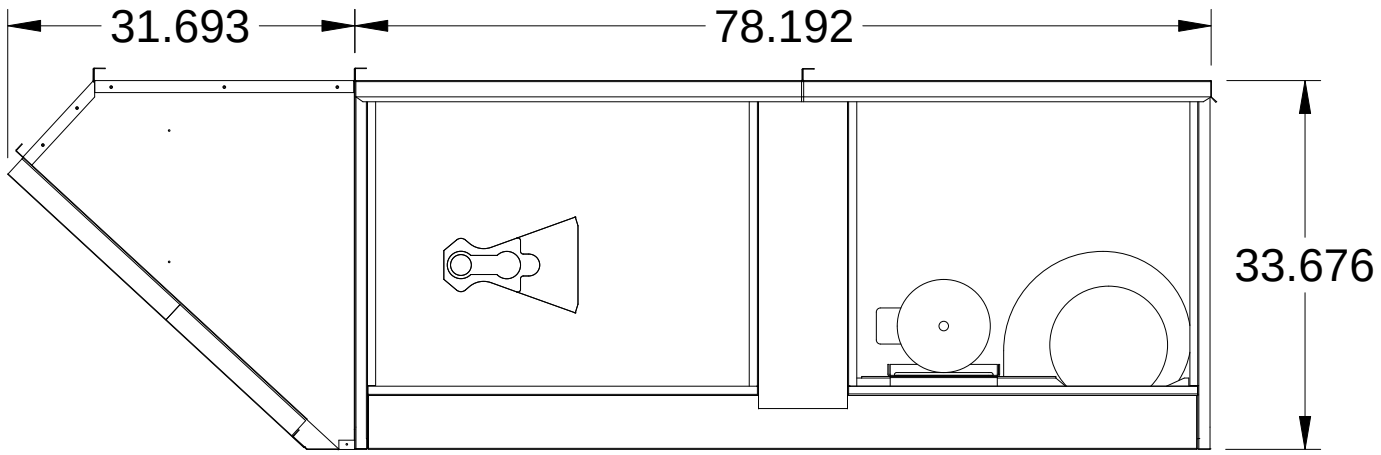

Notes - Elevation View
Standard configuration for unit access is on the right-hand side, when looking into the unit intake in the direction of airflow.
Order of unit sections is from intake of unit to discharge of unit.
Sections included on this unit: Weatherhood Section, Heating Section
Insulation: Double Wall, from Burner Section through end of unit.

PLAN VIEW

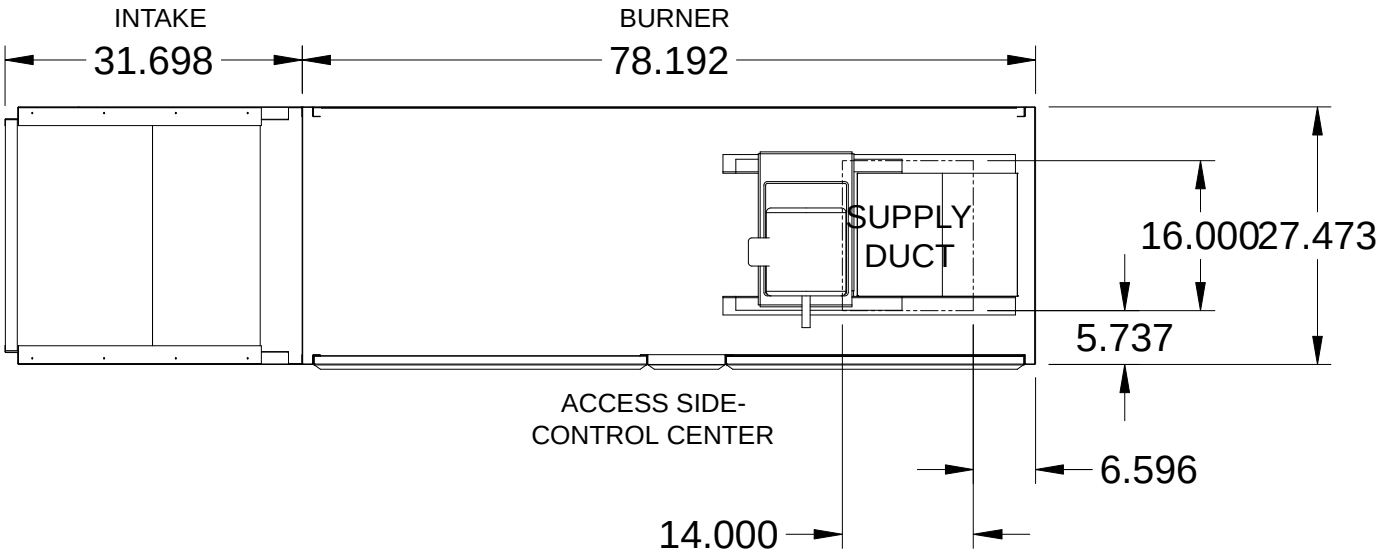

Notes - Plan View
Standard configuration for unit access is on the right-hand side, when looking into the unit intake in the direction of airflow.

END VIEW

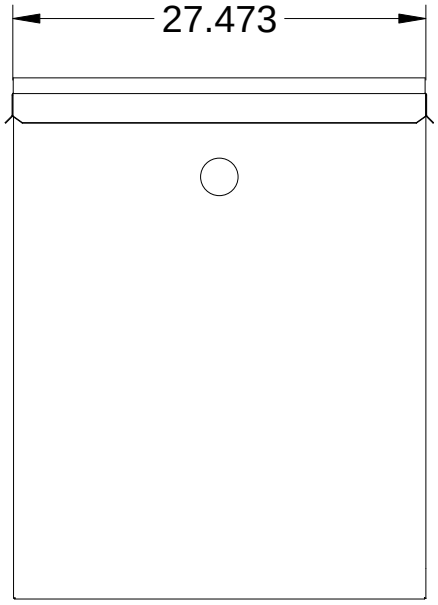

FOOTPRINT VIEW

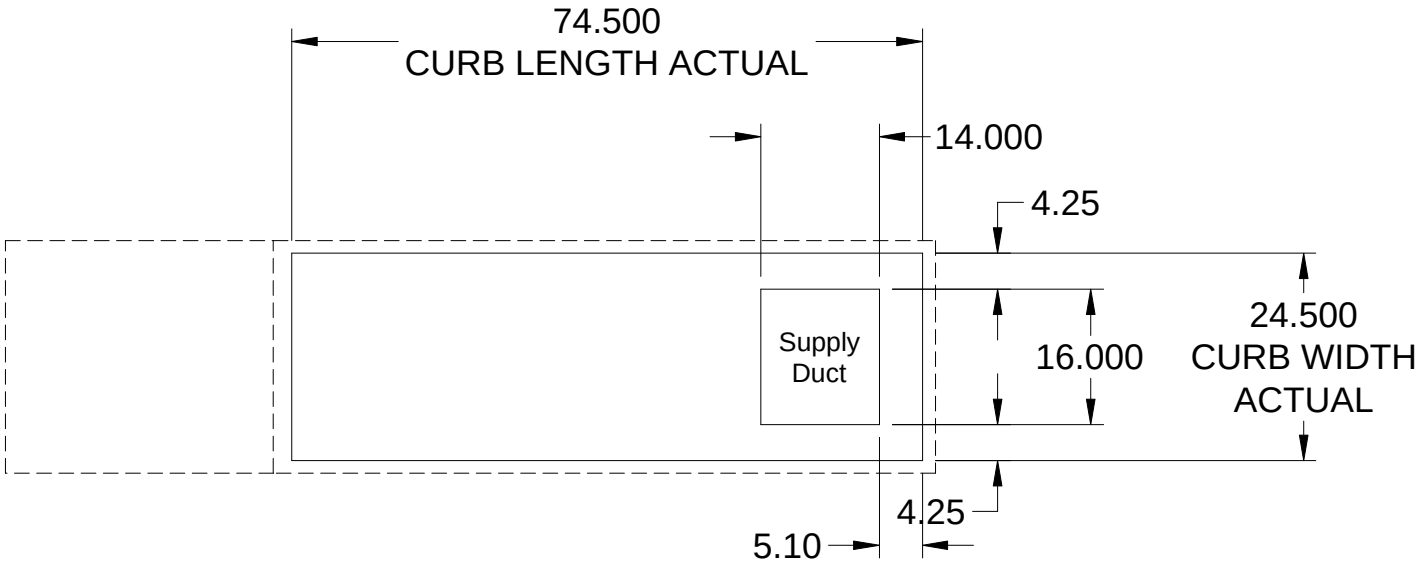

Notes - Footprint View
Minimum Roof Opening: The minimum roof opening size is the illustrated duct diameter plus 0.25 in. on all sides. For example: If the duct size is 14 x 14 in. square, the minimum roof opening size is 14.5 x 14.5 in. square.
Maximum Roof Opening: There must be a minimum perimeter of 1.75 in. between the roof opening and the roof curb. For example: If the roof curb is 75 x 30 in. square, the maximum roof opening is 71.5 x 26.5 in. inches square.
The weatherhood and filter sections of the make-up air unit extend beyond the curb. This is by design, to prevent water infiltration.

CURB VIEW

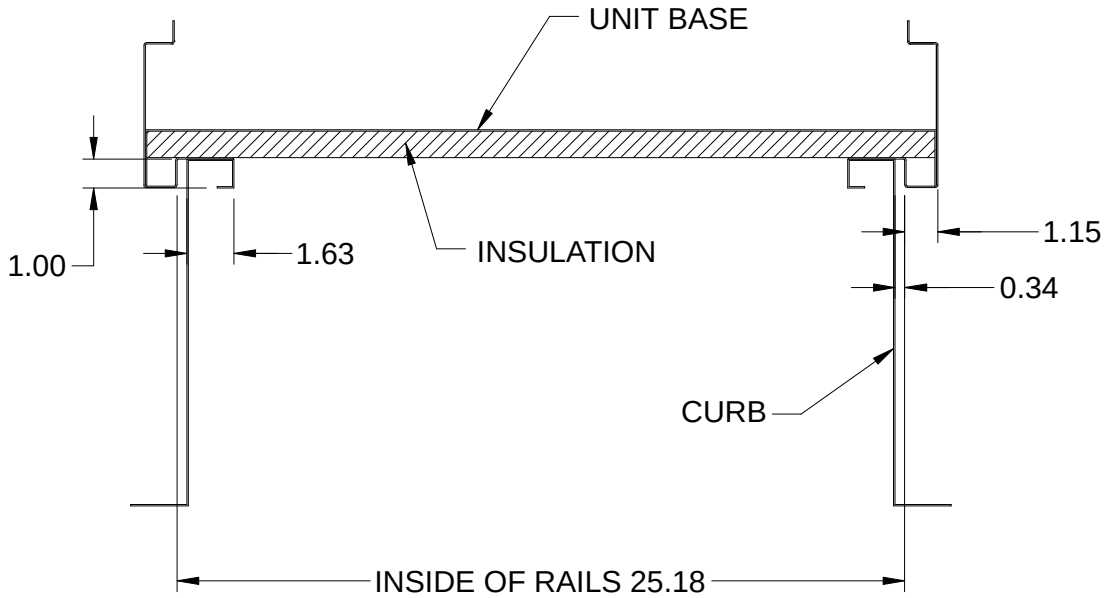

Notes - Curb View
All dimensions shown are in in.'s.
Curb Dimenision: Length = 74.5 in. Width = 24.5 in. Height = 20 in.

Clearance Specifications

Recommended Minimum Combustible Clearances				
	Floor (in.)	**Top (in.)**	**Sides (in.)**	**Ends (in.)**
Insulated Units	0	0	0	0
Non-Insulated Units	0	6	6	6

Notes - Combustible Clearances

Clearance to combustibles is defined as the minimum distance required between the heating source and the adjacent combustible surfaces to ensure the adjacent surface's temperature does not exceed 90 F above the ambient temperature.

Recommended Minimum Service Clearances	
Housing 32 and less (in.)	**Housing 35 and higher (in.)**
42 on the controls side of the unit	48 on the controls side of the unit

Notes - Service Clearances

To ensure ample space for component removal (evaporative cooling media, coils, filters, etc.), service clearances should be 6 in. wider than the width of the module itself.

Wiring Diagram

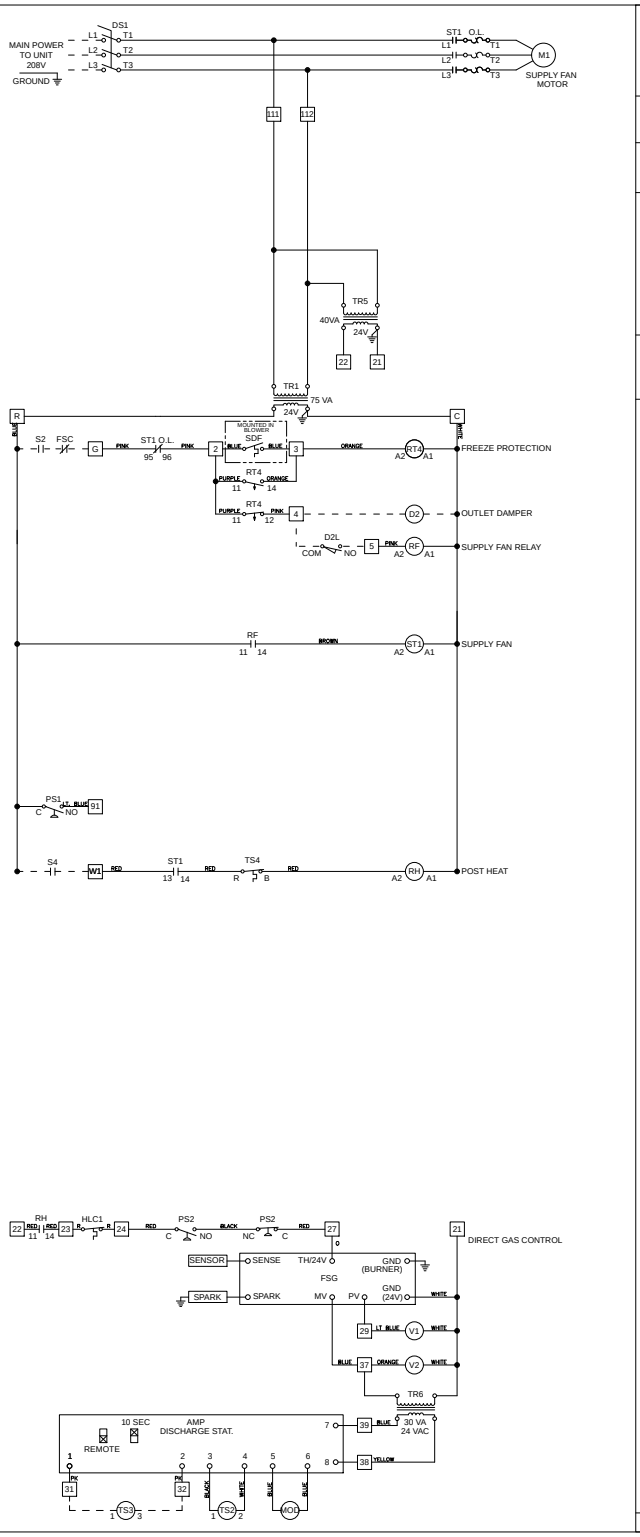

GREENHECK
Building Value in Air.

Wiring Diagram Code:

GD61N401A040N51AM19

CAUTION

UNIT SHALL BE GROUNDED IN ACCORDANCE WITH N.E.C.
POWER MUST BE OFF WHILE SERVICING.

NOTES

USE COPPER CONDUCTORS ONLY
60° C FOR TERMINALS RATED LESS THAN 100 AMPS.
75° C FOR TERMINALS RATED 100 AMPS OR MORE.

FIELD CONTROL WIRING RESISTANCE SHOULD NOT EXCEED 0.75 OHM.

FIELD WIRED – – – – –
FACTORY SUPPLIED AND WIRED ————

WIRE COLOR CODE

BK	BLACK	BL	BLUE	BR	BROWN
GY	GRAY	LT BL	LIGHT BLUE	O	ORANGE
PK	PINK	PR	PURPLE	R	RED
W	WHITE	Y	YELLOW		

LEGEND

AMP	AMPLIFIER
D2	OUTLET DAMPER
D2L	OUTLET DAMPER LIMIT
DS1	MAIN DISCONNECT SWITCH
FSC	FIRE SYSTEM CONTACT
FSG	FLAME SAFE GUARD
HLC	HIGH LIMIT CONTROL
M#	MOTOR
MOD	MODULATING VALVE
OL#	MOTOR OVERLOAD
PS1	DIRTY FILTER SWITCH
PS2	AIR PROVING SWITCH
RF	SUPPLY FAN RELAY
RH	HEAT RELAY
RT4	FREEZE PROTECTION TIMER SWITCH 1 and 4 DOWN - 2 and 3 UP / DIAL SET TO 4
S2	FAN SWITCH
S4	HEAT AND COOL SWITCH
SDF	SENSOR DISCHARGE - FREEZE
SG	SPARK GENERATOR
ST#	MOTOR STARTER
TR#	TRANSFORMER
TS2	DISCHARGE AIR SENSOR
TS3	TEMPERATURE SELECTOR
TS4	INLET AIR SENSOR - HEAT
V1	PILOT VALVE
V2	MAIN VALVE

Wiring Template: M19 DOC NUMBER: ---- REV: ----

Manufacturer reserves the right to change, modify, or improve this product at anytime

OUTLET DAMPER

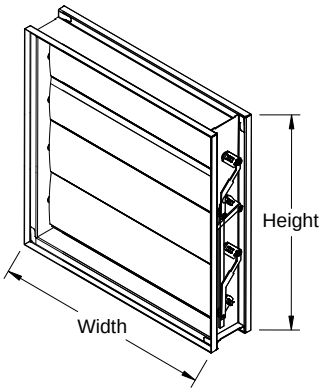

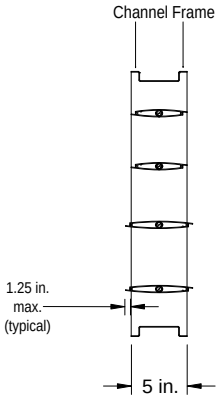

Notes: All dimensions shown are in units of inches. Width & Height furnished approximately 0.25 under size. Installation instructions available at www.greenheck.com. Customer supplied actuators configured with a jackshaft will be provided with a jackshaft this is one inch in diameter.

QTY	WIDTH	HEIGHT
1	14 in.	16 in.

NOTE: Width and Height are shown in nominal dimensions

Application & Design

The model VCD-34 is a low leakage control damper with thermally insulated blades. This model is intended for application in medium pressure and velocity systems. Non-jackshafted dampers will be supplied with a blade drive lever for internal actuator mounting. When external actuator mounting is specified, an extension pin with clip kit will be provided. Note: The extension pin with clip kit includes extension pin and clip.

Ratings

Pressure:	Up to 10 in. wg pressure differential
Velocity:	4,000 ft/min
Leakage:	Class 1A @ 1 in. wg, Class 1 @ up to 8 in. wg
Temperature:	Up to 250F

Manufacturer reserves right to change, alter, or improve this product at any time.

Roof Curb - GPI

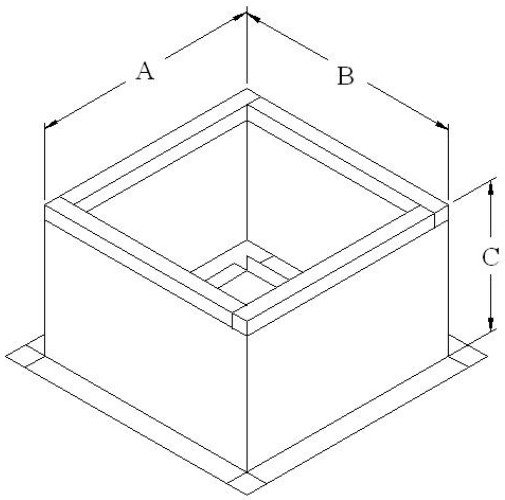

Roof Curb Dimensions		
Dimension	**Description**	**Value (in.)**
A	Length	74.5
B	Width	24.5
C	Height	20

GPI Curb Weight	64 lb

Construction Features and Notes
All Dimensions are actual.
Galvanized steel (18 ga.)
Straight sided with 2(in.) and wood nailer.
1 in., 3 lb. density insulation
The Roof Opening Dimension may NOT match the Structural Roof Support Dimension.
Curbs with length greater than 111.5 may ship knocked-down, dependent on manufacturing location.

Corner Weights

138 lb 123 lb

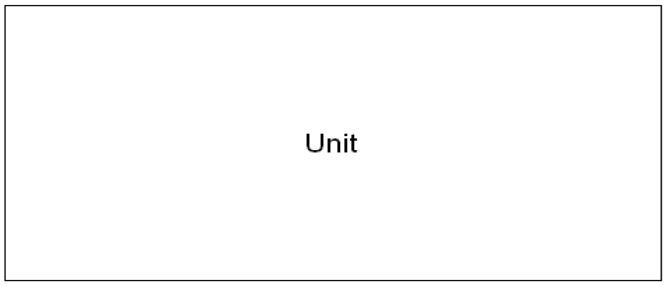

152 lb 136 lb

TSCP - Remote Control Panel

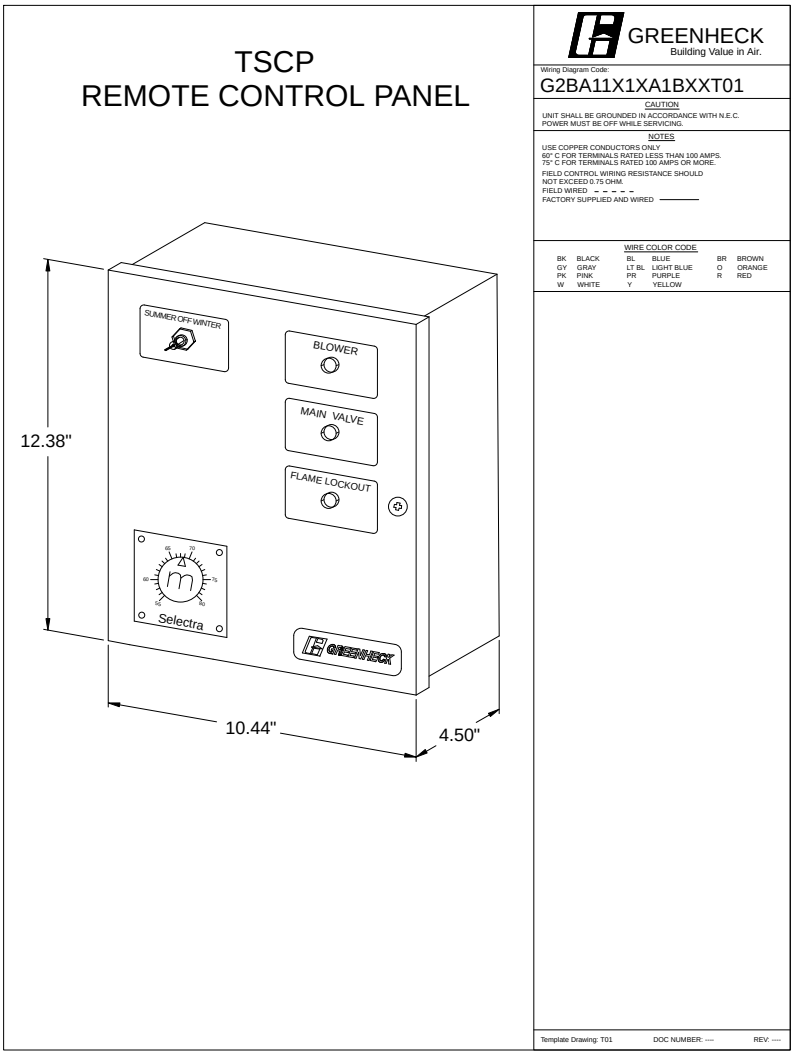

Standard Construction Features And Notes
Location of switches, lights and controls may vary.
All dimensions shown are in units of inches.
Galvanized steel with baked enamel finish.
Numbered terminal strip to match unit wiring.

Remote Panel Wiring Requirements

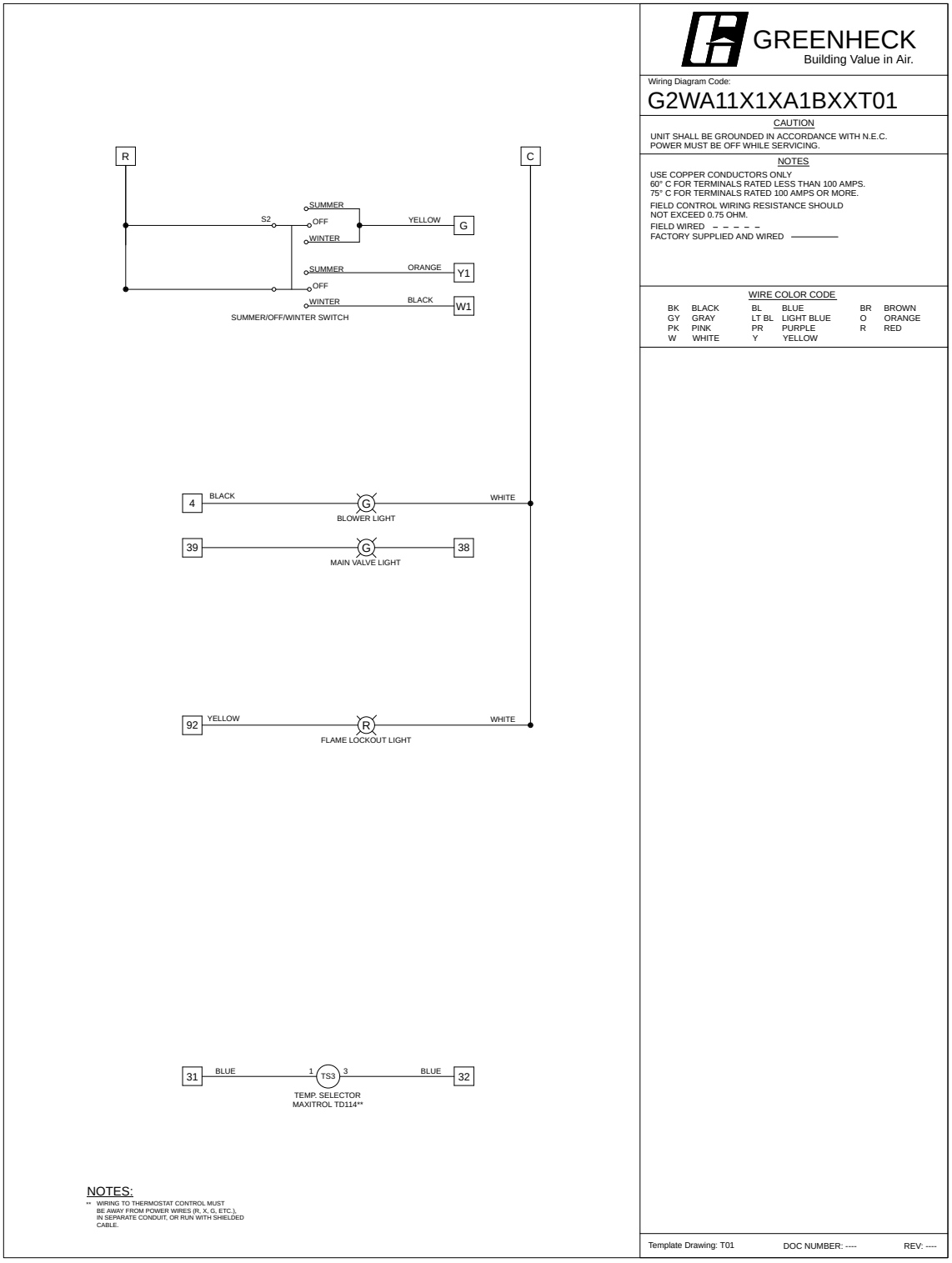

The wiring drawings details the number of the wires and the type of wire that needs to be run from the unit control center to the panel. A detailed wiring schematic will be provided with the panel when the unit ships.

SEQUENCE OF OPERATIONS

Unit Controls
The unit shall be provided from the factory with:

- 24VAC Transformer
- Terminal Strip
- Supply fan motor starter (contactor and overload)
- Factory provided, field installed supply air insulated outlet damper with actuator
- Remote Control Panel

Remote Control Panel
A Permatector coated NEMA-1 rated remote control panel shall be shipped loose to control the basic operation of the unit. The panel shall contain the following:

- Summer / Off / Winter Switch
  Summer: Supply fan is enabled, heat is disabled.
  Off: Supply fan is disabled.
  Winter: Supply fan is enabled, heat is enabled.
- Blower Light
- Main Valve Light
- Dirty Filter Light

Unit Start-Up Sequence

- Supply Fan Enable Is Received
- Supply air outlet damper actuator is energized
- Supply air outlet damper actuator limit switch is proven closed
- Supply Fan Is Enabled

Supply Fan Sequence
The supply fan is configured for constant volume operation. The fan speed is set to the design fan RPM at the factory through the use of belts and sheaves. Adjustment or replacement of belts/sheaves is necessary to balance the supply airflow. The supply fan speed is not to be modulated.

Heating Control
A heating enable signal must be present and the supply fan must enabled before the unit will enable heating.

Heating Inlet Air Sensor (Heating Lockout)
The heating will be locked out when the outside air temperature is above the heating inlet air sensor set point (typical 65 F, adj.)

Direct Gas Fired Heating (Discharge Control)
The gas control amplifier located in the unit shall modulate the heating to maintain a supply temperature set point (55 F-90 F, adj.).

- A remote panel mounted set point dial shall control the supply temperature set point.

Building Freeze Protection
If the supply air temperature drops below 35 F for 300s (adj.), the supply fan will be disabled. Cycling the fan enable will reset the timer. This sequence is intended to prevent the unit from supply cold air into the building.

Warranty Statement for Make-Up Air

Unit Warranty

Greenheck warrants the equipment to be free from defects in material and workmanship for a period of 1 year (standard) from the shipment date.

DG Burner Extended Warranty

The warranty does not include items deemed as consumable components, including, but not limited to: Igniters, Spark rods, Spark generator, Flame rods,Flame wires, UV eye components, and associated components.

Note: Rust, discoloration of the burner material and cracks or holes smaller than .75 in. is not qualification for a defective burner.

Warranty Notes

Any component which proves defective during the warranty period will be repaired or replaced at Greenheck's sole option when returned to our factory, transportation prepaid. All warranties do not include labor costs associated with troubleshooting, removal, or installation. Greenheck will not be liable for any consequential, punitive, or incidental damages resulting from use, repair, or operation of any Greenheck product. These warranties are exclusive and are in lieu of all other warranties, whether written, oral, or implied, including the warranty of merchantability and the warranty of fitness for a particular purpose. No person (including any agent or salesperson) has authority to expand Seller's obligation beyond the terms of this warranty, or to state that the performance of the product is other than that published by Seller.

As a result of our commitment to continuous improvement, Greenheck reserves the right to change specifications without notice.

DG-P115-H05

Unit Performance

Design Conditions

Elevation (ft)	Summer		Winter (°F)	Supply (CFM)	Outdoor Air (CFM)
	DB (°F)	WB (°F)			
374	87.1	73.5	-15.5	1,070	1,070

Unit Specifications

Qty	Weight (lb)	Cooling Type	Heating Type	Unit Installation	Unit ETL Listing
1	396 (+/- 5%)	None	Direct Gas-Fired	Outdoor/Indoor	ANSI Z83.4 / CSA 3.7

Configuration

Unit Orientation	Unit Configuration	Outdoor Air Intake	Return Air Intake	Supply Air Discharge
Horizontal	Constant Volume 100% OA	End	-	Bottom

Heating Specifications

Type	Gas Type	Gas Pressure		Capacity (MBH)		Temperature Rise (°F)	Performance	
		Min (in. wg)	Max (Psi)	Input	Output		EAT (°F)	LAT (°F)
Direct Gas	Natural	7	0.5	88.6	81.5	70.5	-16.0	55.0

Air Performance

Type	Total Volume (CFM)	External SP (in. wg)	Total SP (in. wg)	RPM	Operating Power (hp)	Fan			
						Qty	Type	Size (in.)	Drive-Type
Supply	1,070	1	1.676	1669	0.64	1	Plenum	15	Direct-Drive

Motor Specifications

Motor	Qty	Size (hp)	Enclosure	Efficiency	RPM
Supply Fan Motor	1	1	ODP	Standard	1725

Electrical Specifications

Power Supply	Rating (V/C/P)	MCA (A)	MOP (A)
Unit	115/60/1	20.8	35

CONSTRUCTION FEATURES AND ACCESSORIES

Unit	
Unit Installation - Indoor or Outdoor	Std
Unit Construction - Double Wall	X
Wall Insulation - 1in. fiberglass - Heat source on	X
Base Insulation - 1in. fiberglass - entire unit base pan	Std
Corrosion Resistant Fasteners	Std
Access and Connections - Right side when facing intake	X
Service Access - Removable lift off panels	X
Unit Finish - Permatector ASTM B117 salt spray 2500 hours	X
Finish Color - Concrete Gray (RAL 7023)	X
Supply Fan - Direct-drive, backward-curved plenum	X
Supply Fan and Motor Vibration isolation - Neoprene	X
Controls	
Unit Controls - Terminal strip with remote panel	X
Remote Panel - Industrial (NEMA-1)	X
Temperature Control - Discharge control	X
Supply Fan VFD	
Supply Fan Control	
Melink/Vari-Flow wiring package	
Recirculation Control	
Unoccupied Mode (Night Setback)	
Control Accessories	
Heating Inlet Air Sensor	X
Cooling Inlet Air Sensor	
Dirty Filter Switch	X
Fire Stat Type III (Ships loose)	
120V/24V Smoke Detector (Ships loose)	
Inlet Damper End Switch	
External Cooling Lockout Relay	
Freeze Protection (Supply Air Low Limit)	X
Auxiliary Supply Starter Contacts	
Auxiliary Exhaust Starter Contacts	
Airflow Proving Monitoring Contact	

Accessories	
Factory Installed, Lockable, NEMA 3R Disconnect	Std
Weatherhood - Aluminum Mesh filtered	X
Supply Air Filters	
Outdoor Air Inlet Damper	
Supply Air Outlet Damper - Insulated, low leakage	X
Diffuser	
Roof Curb - GPI	X
Combination Curb	
Spare Belts	
Spare Filters	
Motor with Shaft Grounding	
Service Outlet - Shipped loose	X
Gas Heating Accessories	
Pilot Ignition	Std
Flame Sensing - Flame rod	X
Flame Safeguard Display	
Agency Approval - ETL and IRI	Std
FM Approved	
Minnesota Code Requirements	
High Gas Pressure Switch	
Low Gas Pressure Switch	
Visual Indication Valves	
External Gas Pressure Regulator (Ships loose)	
Warranty Options	
Unit Warranty - 1 Year	X
5 Year Burner Warranty	
10 Year Burner Warranty	

Standard Option	Std
Not Included	
Included	X

Fan Charts And Performance

Supply Fan Performance

Total Volume (CFM)	External SP (in. wg)	Total SP (in. wg)	RPM	Operating Power (hp)	Motor		Fan		
					Qty	Size (hp)	Qty	Type	Drive-Type
1,070	1	1.676	1669	0.64	1	1	1	Plenum	Direct

Pressure Drop (in. wg)

Weatherhood	Filter	Damper	Cooling	Heating	External	Total
0.051	-	-	-	0.625	1	1.676

Sound Performance in Accordance with AMCA

Sound Power by Octave Band								Lwa	dBA	Sones
62.5	125	250	500	1000	2000	4000	8000			
79	78	78	71	63	53	48	47	73	62	10.3

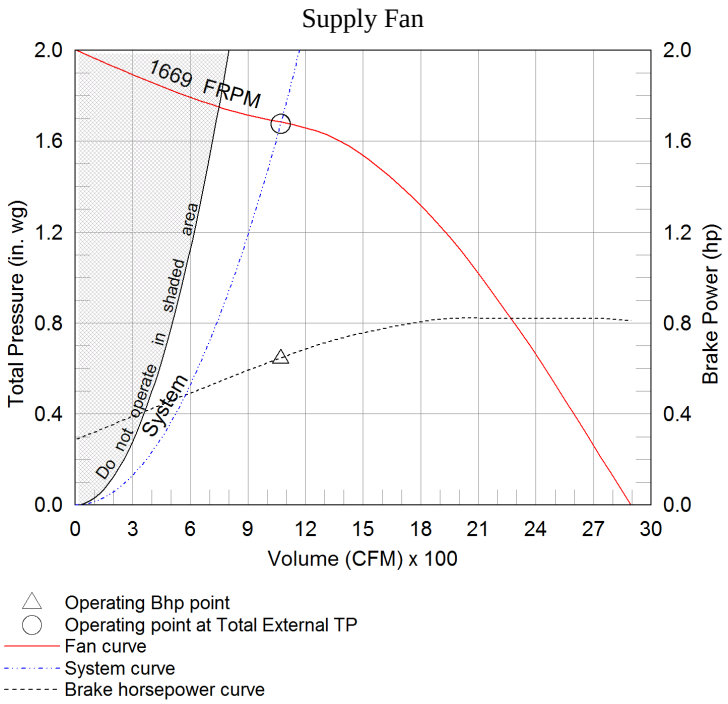

Heating Specifications

Heating Performance								
Type	Gas Type	Gas Pressure		Capacity (MBH)		Temperature Rise (°F)	Performance	
		Min (in. wg)	Max (Psi)	Input	Output		EAT (°F)	LAT (°F)
Direct Gas	Natural	7	0.5	88.6	81.5	70.5	-16.0	55.0

Gas Train Details								
Redundant Main Valves	Electronic Modulating Valve	Pilot Valve	Internal Regulator	Visual Indication Valve	Proof of Closure Valve	Hydraulic Main Valve(s)	Gas Pressure Switch(es)	External Regulator
Std	Std	Std	Std	-	-	-	-	-

Additional Heating Information							
Agency Approvals			Temperature Control	Flame Sensing	Ignition Control	CO2 Sensor	Flame Safeguard Display
ETL and IRI	FM Approved	Minnesota Code					
Std	-	-	Discharge	Flame Rod	Pilot	-	-

Unit Details
92% thermal efficiency
Cast aluminum burner manifold with stainless steel mixing plates
Electronic modulation burner control

10 second pre-purge sequence
Low fire start

Gas Connections

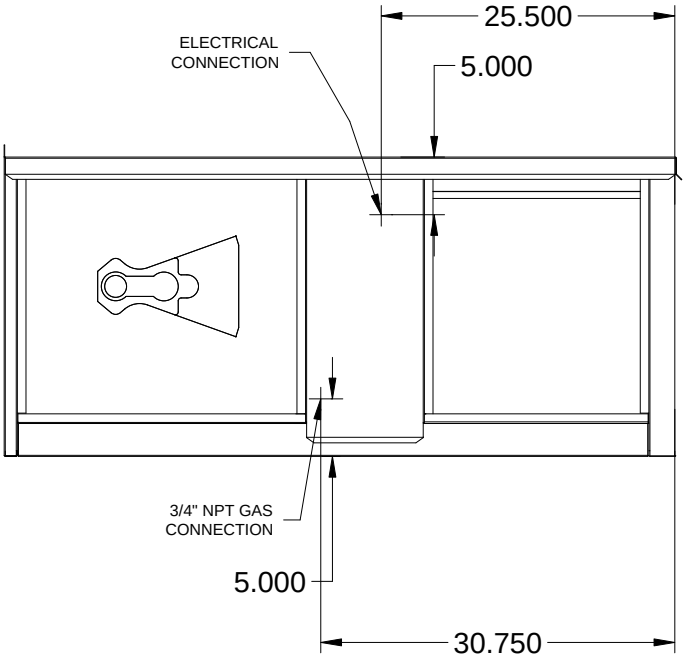

ELEVATION VIEW

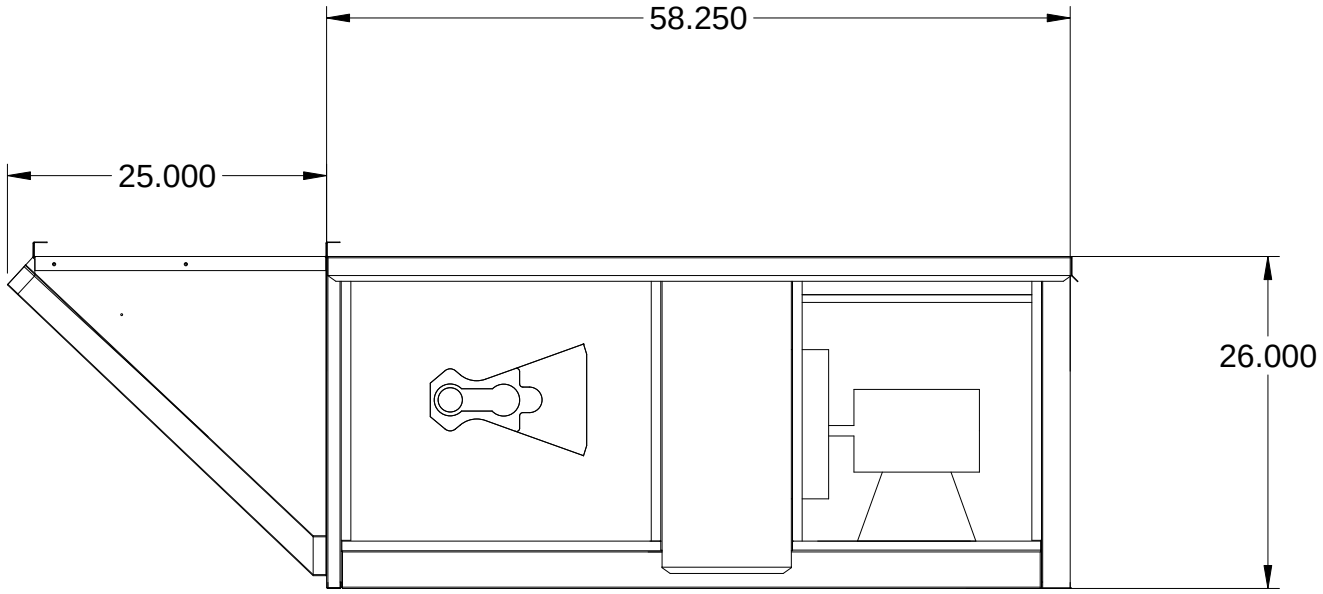

Notes - Elevation View
Standard configuration for unit access is on the right-hand side, when looking into the unit intake in the direction of airflow.
Order of unit sections is from intake of unit to discharge of unit.
Sections included on this unit: Weatherhood Section, Heating Section
Insulation: Double Wall, from Burner Section through end of unit.

PLAN VIEW

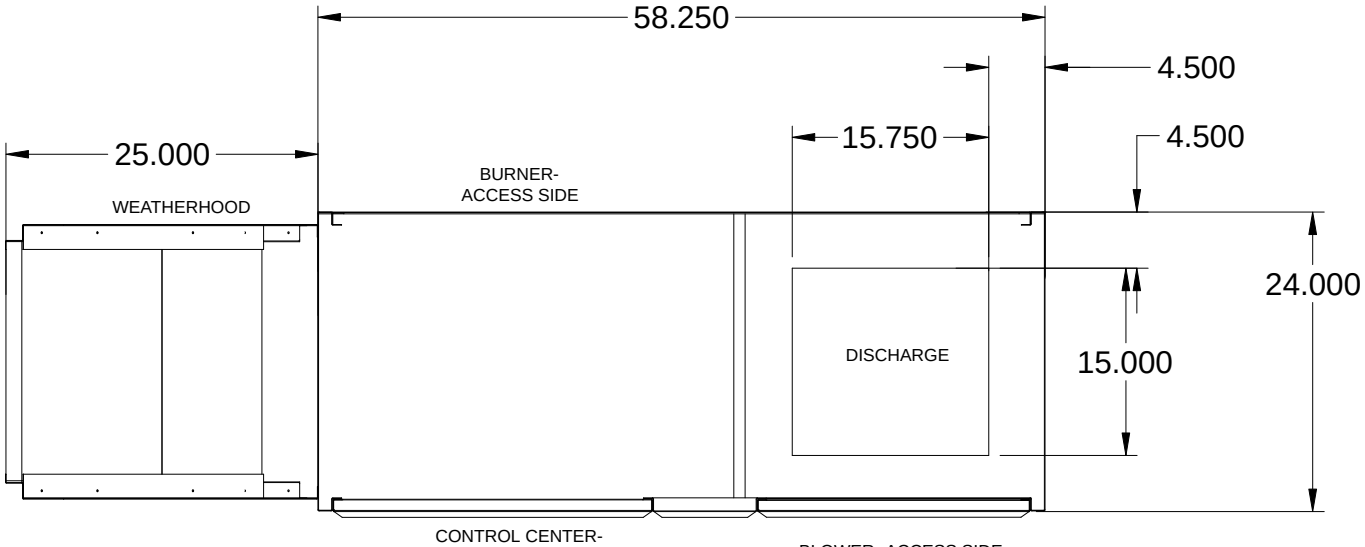

Notes - Plan View
Standard configuration for unit access is on the right-hand side, when looking into the unit intake in the direction of airflow.

END VIEW

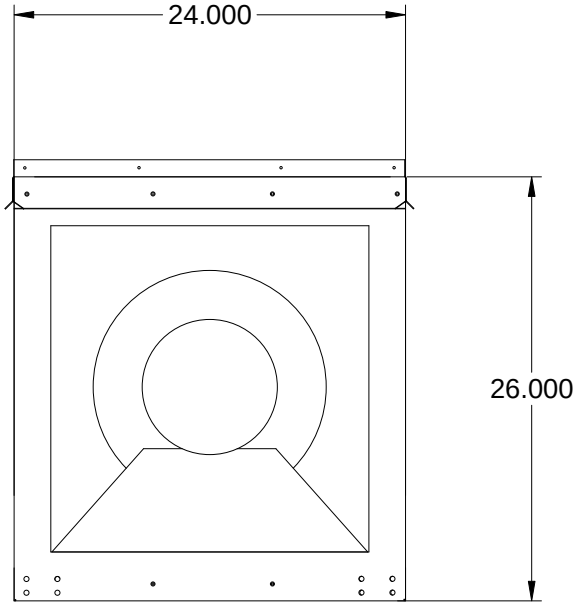

FOOTPRINT VIEW

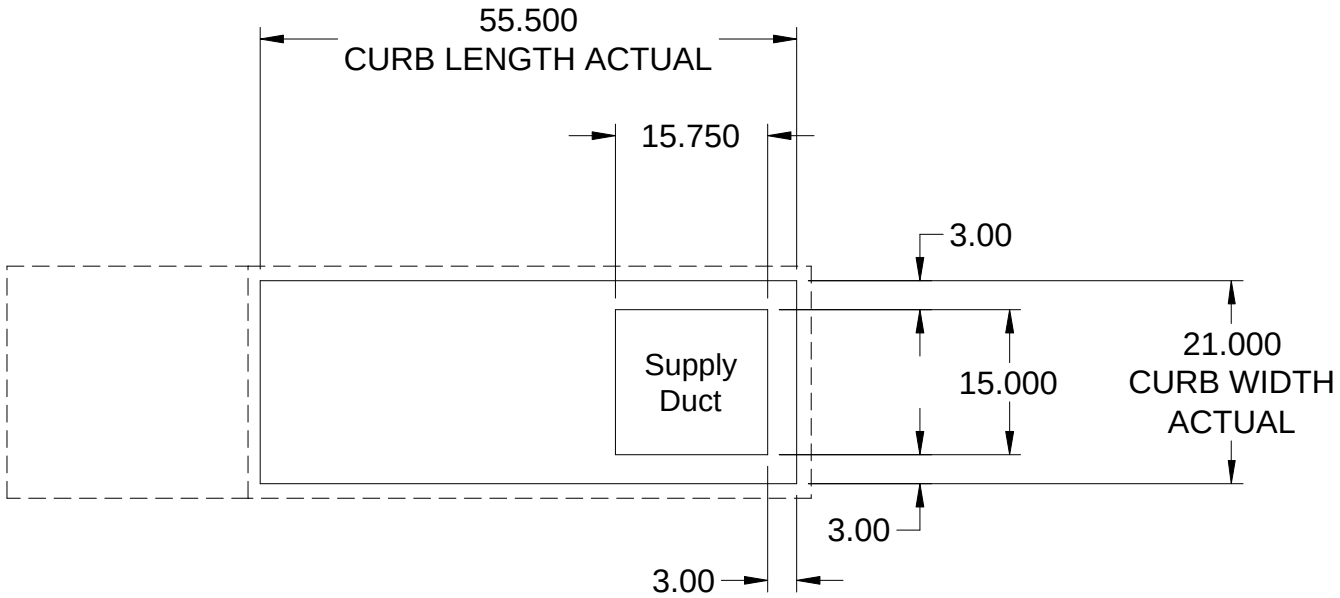

Notes - Footprint View
Minimum Roof Opening: The minimum roof opening size is the illustrated duct diameter plus 0.25 in. on all sides. For example: If the duct size is 14 x 14 in. square, the minimum roof opening size is 14.5 x 14.5 in. square.
Maximum Roof Opening: There must be a minimum perimeter of 1.75 in. between the roof opening and the roof curb. For example: If the roof curb is 75 x 30 in. square, the maximum roof opening is 71.5 x 26.5 in. inches square.
The weatherhood and filter sections of the make-up air unit extend beyond the curb. This is by design, to prevent water infiltration.

CURB VIEW

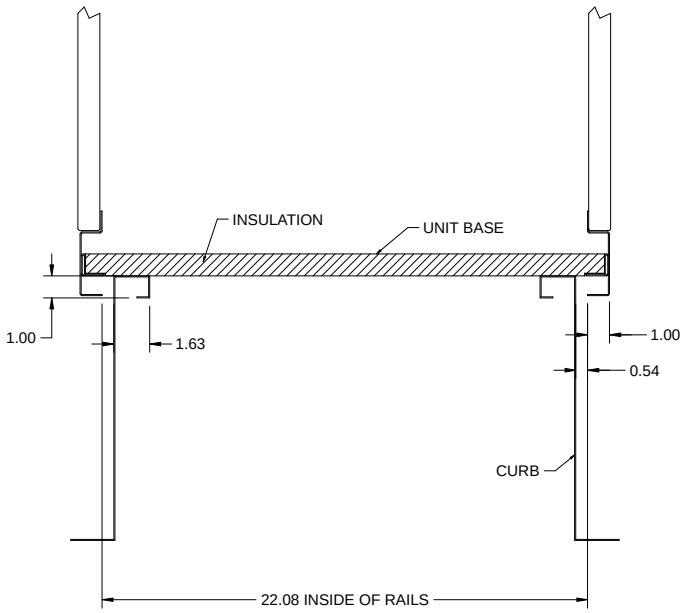

Notes - Curb View
All dimensions shown are in in.'s.
Curb Dimenision: Length = 55.5 in. Width = 21 in. Height = 20 in.

Clearance Specifications

Recommended Minimum Combustible Clearances				
	Floor (in.)	**Top (in.)**	**Sides (in.)**	**Ends (in.)**
Insulated Units	0	0	0	0
Non-Insulated Units	0	6	6	6

Notes - Combustible Clearances

Clearance to combustibles is defined as the minimum distance required between the heating source and the adjacent combustible surfaces to ensure the adjacent surface's temperature does not exceed 90 F above the ambient temperature.

Recommended Minimum Service Clearances	
Housing 32 and less (in.)	**Housing 35 and higher (in.)**
42 on the controls side of the unit	48 on the controls side of the unit

Notes - Service Clearances

To ensure ample space for component removal (evaporative cooling media, coils, filters, etc.), service clearances should be 6 in. wider than the width of the module itself.

Wiring Diagram

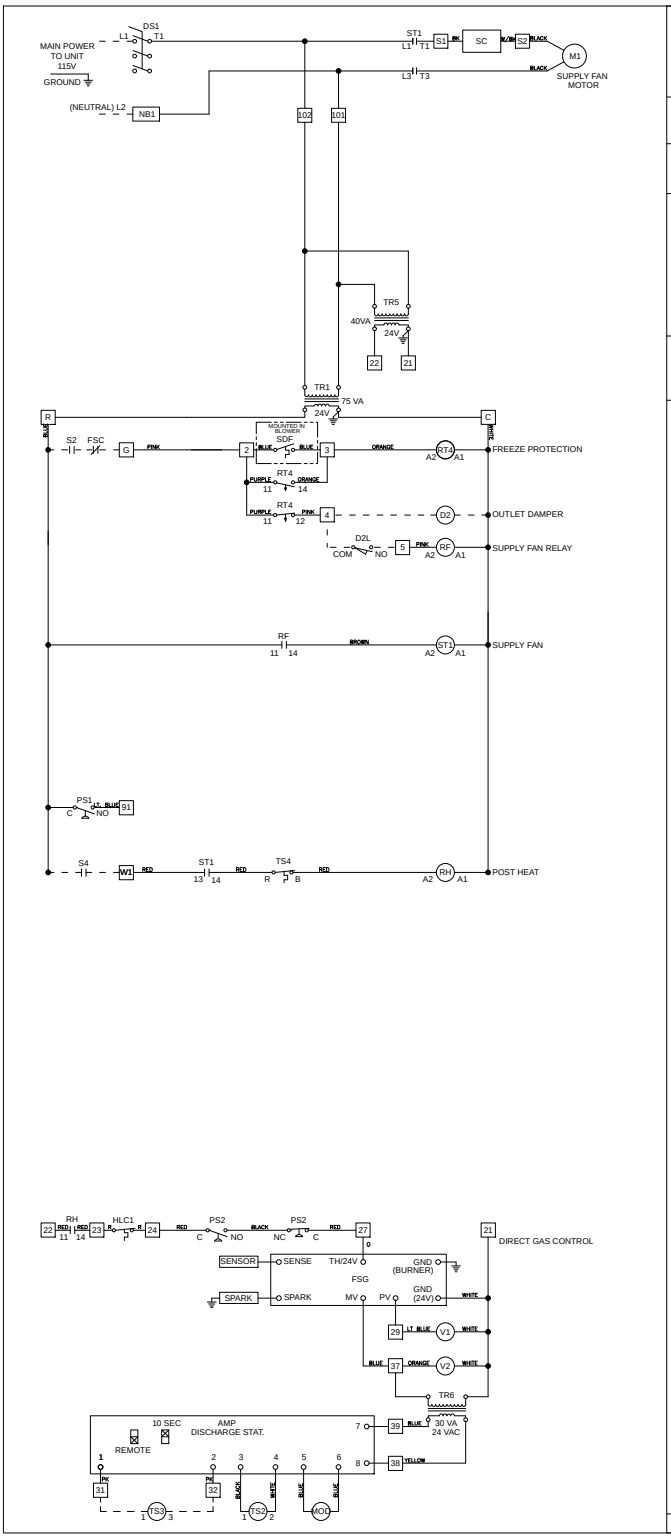

GREENHECK
Building Value in Air.

Wiring Diagram Code:

GD61N102N040N51AM19

CAUTION

UNIT SHALL BE GROUNDED IN ACCORDANCE WITH N.E.C.
POWER MUST BE OFF WHILE SERVICING.

NOTES

USE COPPER CONDUCTORS ONLY
60° C FOR TERMINALS RATED LESS THAN 100 AMPS.
75° C FOR TERMINALS RATED 100 AMPS OR MORE.

FIELD CONTROL WIRING RESISTANCE SHOULD NOT EXCEED 0.75 OHM.

FIELD WIRED – – – – –
FACTORY SUPPLIED AND WIRED ————

WIRE COLOR CODE

BK	BLACK	BL	BLUE	BR	BROWN
GY	GRAY	LT BL	LIGHT BLUE	O	ORANGE
PK	PINK	PR	PURPLE	R	RED
W	WHITE	Y	YELLOW		

LEGEND

AMP	AMPLIFIER
D2	OUTLET DAMPER
D2L	OUTLET DAMPER LIMIT
DS1	MAIN DISCONNECT SWITCH
FSC	FIRE SYSTEM CONTACT
FSG	FLAME SAFE GUARD
FU#	FUSE
HLC	HIGH LIMIT CONTROL
M#	MOTOR
MOD	MODULATING VALVE
NB1	NEUTRAL BLOCK
PS1	DIRTY FILTER SWITCH
PS2	AIR PROVING SWITCH
RF	SUPPLY FAN RELAY
RF1	FAN ENABLE RELAY
RH	HEAT RELAY
RT4	FREEZE PROTECTION TIMER SWITCH 1 and 4 DOWN - 2 and 3 UP / DIAL SET TO 4
S2	FAN SWITCH
S4	HEAT AND COOL SWITCH
SDF	SENSOR DISCHARGE - FREEZE
SG	SPARK GENERATOR
ST#	MOTOR STARTER
TR#	TRANSFORMER
TS2	DISCHARGE AIR SENSOR
TS3	TEMPERATURE SELECTOR
TS4	INLET AIR SENSOR - HEAT
V1	PILOT VALVE
V2	MAIN VALVE

Wiring Template: M19 DOC NUMBER: ---- REV: ----

Manufacturer reserves the right to change, modify, or improve this product at anytime

OUTLET DAMPER

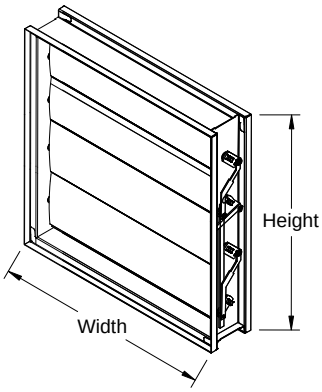

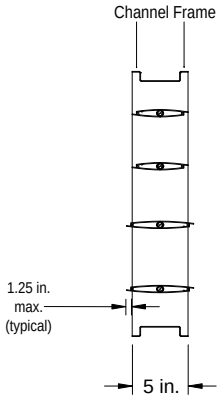

Notes: All dimensions shown are in units of inches. Width & Height furnished approximately 0.25 under size. Installation instructions available at www.greenheck.com. Customer supplied actuators configured with a jackshaft will be provided with a jackshaft this is one inch in diameter.

QTY	WIDTH	HEIGHT
1	19.5 in.	20 in.

NOTE: Width and Height are shown in nominal dimensions

Application & Design

The model VCD-34 is a low leakage control damper with thermally insulated blades. This model is intended for application in medium pressure and velocity systems. Non-jackshafted dampers will be supplied with a blade drive lever for internal actuator mounting. When external actuator mounting is specified, an extension pin with clip kit will be provided. Note: The extension pin with clip kit includes extension pin and clip.

Ratings

Pressure:	Up to 10 in. wg pressure differential
Velocity:	4,000 ft/min
Leakage:	Class 1A @ 1 in. wg, Class 1 @ up to 8 in. wg
Temperature:	Up to 250F

Manufacturer reserves right to change, alter, or improve this product at any time.

Roof Curb - GPI

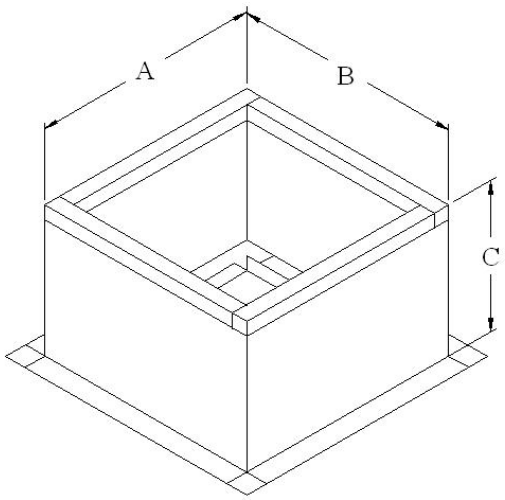

Roof Curb Dimensions		
Dimension	**Description**	**Value (in.)**
A	Length	55.5
B	Width	21
C	Height	20

GPI Curb Weight	49 lb

Construction Features and Notes
All Dimensions are actual.
Galvanized steel (18 ga.)
Straight sided with 2(in.) and wood nailer.
1 in., 3 lb. density insulation
The Roof Opening Dimension may NOT match the Structural Roof Support Dimension.
Curbs with length greater than 111.5 may ship knocked-down, dependent on manufacturing location.

Corner Weights

116 lb 55 lb

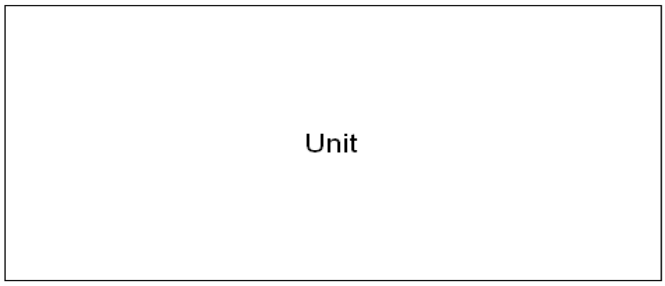

152 lb 72 lb

TSCP - Remote Control Panel

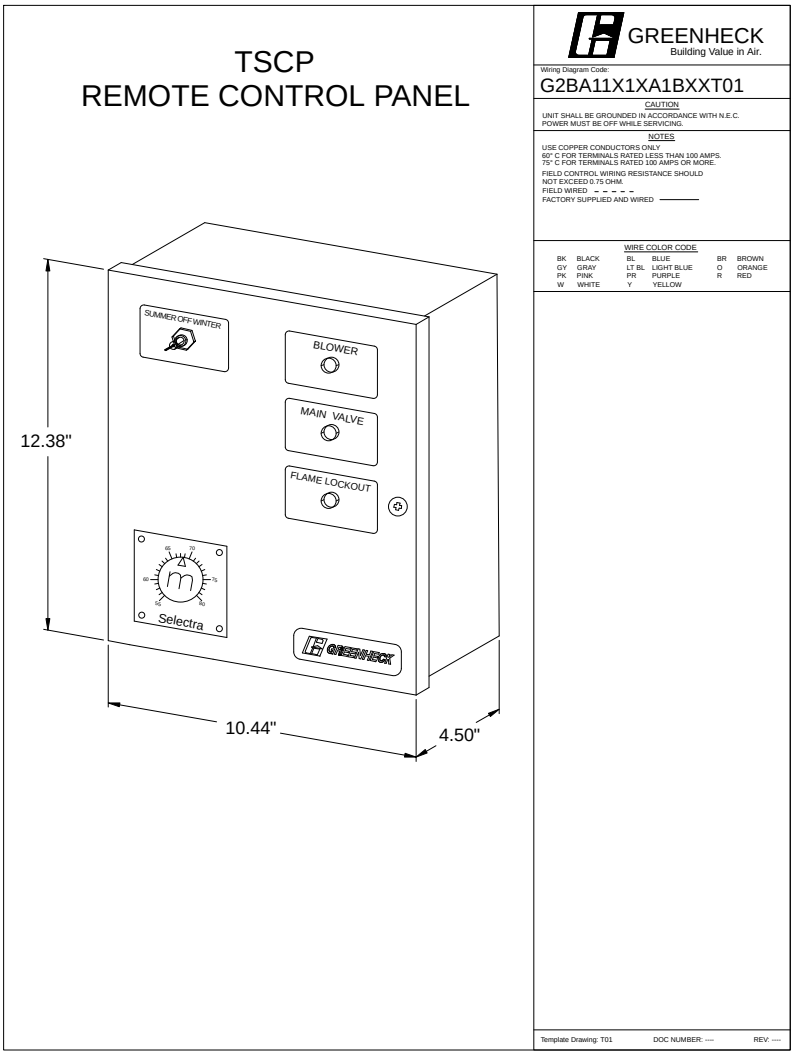

Standard Construction Features And Notes
Location of switches, lights and controls may vary.
All dimensions shown are in units of inches.
Galvanized steel with baked enamel finish.
Numbered terminal strip to match unit wiring.

Remote Panel Wiring Requirements

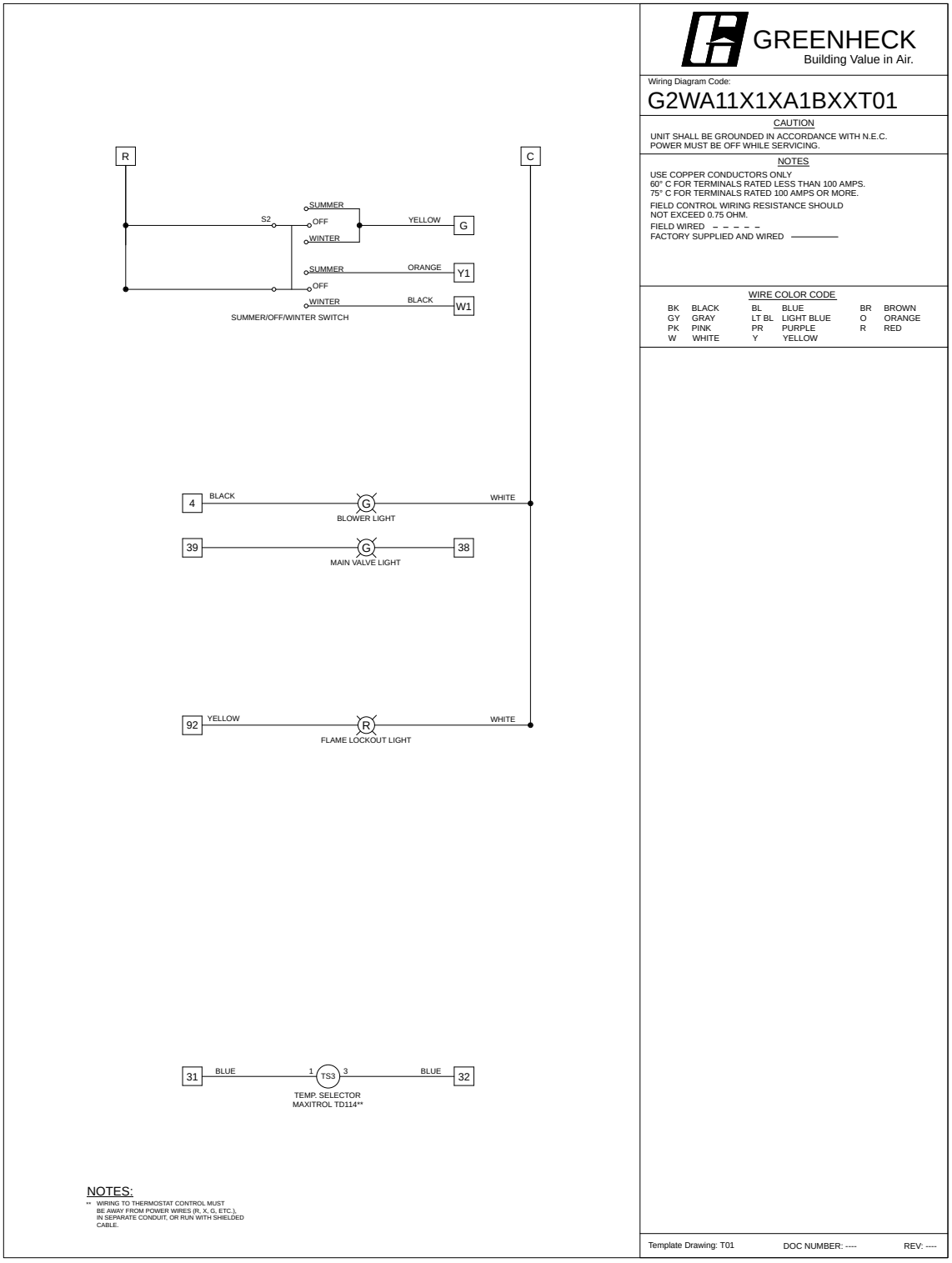

The wiring drawings details the number of the wires and the type of wire that needs to be run from the unit control center to the panel. A detailed wiring schematic will be provided with the panel when the unit ships.

SEQUENCE OF OPERATIONS

Unit Controls
The unit shall be provided from the factory with:

- 24VAC Transformer
- Terminal Strip
- Supply Fan contactor and integral motor overload protection
- Factory provided, field installed supply air insulated outlet damper with actuator
- Remote Control Panel

Remote Control Panel
A Permatector coated NEMA-1 rated remote control panel shall be shipped loose to control the basic operation of the unit. The panel shall contain the following:

- Summer / Off / Winter Switch
  Summer: Supply fan is enabled, heat is disabled.
  Off: Supply fan is disabled.
  Winter: Supply fan is enabled, heat is enabled.
- Blower Light
- Main Valve Light
- Dirty Filter Light

Unit Start-Up Sequence

- Supply Fan Enable Is Received
- Supply air outlet damper actuator is energized
- Supply air outlet damper actuator limit switch is proven closed
- Supply Fan Is Enabled

Supply Fan Sequence
The supply fan is configured for constant volume operation. The fan speed is set to the design fan RPM through the use of a speed control dial. The supply fan speed is not to be modulated.

Heating Control
A heating enable signal must be present and the supply fan must enabled before the unit will enable heating.

Heating Inlet Air Sensor (Heating Lockout)
The heating will be locked out when the outside air temperature is above the heating inlet air sensor set point (typical 65 F, adj.)

Direct Gas Fired Heating (Discharge Control)
The gas control amplifier located in the unit shall modulate the heating to maintain a supply temperature set point (55 F-90 F, adj.).

- A remote panel mounted set point dial shall control the supply temperature set point.

Building Freeze Protection
If the supply air temperature drops below 35 F for 300s (adj.), the supply fan will be disabled. Cycling the fan enable will reset the timer. This sequence is intended to prevent the unit from supply cold air into the building.

Warranty Statement for Make-Up Air

Unit Warranty

Greenheck warrants the equipment to be free from defects in material and workmanship for a period of 1 year (standard) from the shipment date.

DG Burner Extended Warranty

The warranty does not include items deemed as consumable components, including, but not limited to: Igniters, Spark rods, Spark generator, Flame rods,Flame wires, UV eye components, and associated components.

Note: Rust, discoloration of the burner material and cracks or holes smaller than .75 in. is not qualification for a defective burner.

Warranty Notes

Any component which proves defective during the warranty period will be repaired or replaced at Greenheck's sole option when returned to our factory, transportation prepaid. All warranties do not include labor costs associated with troubleshooting, removal, or installation. Greenheck will not be liable for any consequential, punitive, or incidental damages resulting from use, repair, or operation of any Greenheck product. These warranties are exclusive and are in lieu of all other warranties, whether written, oral, or implied, including the warranty of merchantability and the warranty of fitness for a particular purpose. No person (including any agent or salesperson) has authority to expand Seller's obligation beyond the terms of this warranty, or to state that the performance of the product is other than that published by Seller.

As a result of our commitment to continuous improvement, Greenheck reserves the right to change specifications without notice.

DG-P115-H05

Unit Performance

Design Conditions

Elevation (ft)	Summer		Winter (°F)	Supply (CFM)	Outdoor Air (CFM)
	DB (°F)	WB (°F)			
374	87.1	73.5	-15.5	800	800

Unit Specifications

Qty	Weight (lb)	Cooling Type	Heating Type	Unit Installation	Unit ETL Listing
1	396 (+/- 5%)	None	Direct Gas-Fired	Outdoor/Indoor	ANSI Z83.4 / CSA 3.7

Configuration

Unit Orientation	Unit Configuration	Outdoor Air Intake	Return Air Intake	Supply Air Discharge
Horizontal	Constant Volume 100% OA	End	-	Bottom

Heating Specifications

Type	Gas Type	Gas Pressure		Capacity (MBH)		Temperature Rise (°F)	Performance	
		Min (in. wg)	Max (Psi)	Input	Output		EAT (°F)	LAT (°F)
Direct Gas	Natural	7	0.5	66.2	60.9	70.5	-16.0	55.0

Air Performance

Type	Total Volume (CFM)	External SP (in. wg)	Total SP (in. wg)	RPM	Operating Power (hp)	Fan			
						Qty	Type	Size (in.)	Drive-Type
Supply	800	1	1.479	1543	0.46	1	Plenum	15	Direct-Drive

Motor Specifications

Motor	Qty	Size (hp)	Enclosure	Efficiency	RPM
Supply Fan Motor	1	1	ODP	Standard	1725

Electrical Specifications

Power Supply	Rating (V/C/P)	MCA (A)	MOP (A)
Unit	115/60/1	20.8	35

CONSTRUCTION FEATURES AND ACCESSORIES

Unit	
Unit Installation - Indoor or Outdoor	Std
Unit Construction - Double Wall	X
Wall Insulation - 1in. fiberglass - Heat source on	X
Base Insulation - 1in. fiberglass - entire unit base pan	Std
Corrosion Resistant Fasteners	Std
Access and Connections - Right side when facing intake	X
Service Access - Removable lift off panels	X
Unit Finish - Permatector ASTM B117 salt spray 2500 hours	X
Finish Color - Concrete Gray (RAL 7023)	X
Supply Fan - Direct-drive, backward-curved plenum	X
Supply Fan and Motor Vibration isolation - Neoprene	X
Controls	
Unit Controls - Terminal strip with remote panel	X
Remote Panel - Industrial (NEMA-1)	X
Temperature Control - Discharge control	X
Supply Fan VFD	
Supply Fan Control	
Melink/Vari-Flow wiring package	
Recirculation Control	
Unoccupied Mode (Night Setback)	
Control Accessories	
Heating Inlet Air Sensor	X
Cooling Inlet Air Sensor	
Dirty Filter Switch	X
Fire Stat Type III (Ships loose)	
120V/24V Smoke Detector (Ships loose)	
Inlet Damper End Switch	
External Cooling Lockout Relay	
Freeze Protection (Supply Air Low Limit)	X
Auxiliary Supply Starter Contacts	
Auxiliary Exhaust Starter Contacts	
Airflow Proving Monitoring Contact	

Accessories	
Factory Installed, Lockable, NEMA 3R Disconnect	Std
Weatherhood - Aluminum Mesh filtered	X
Supply Air Filters	
Outdoor Air Inlet Damper	
Supply Air Outlet Damper - Insulated, low leakage	X
Diffuser	
Roof Curb - GPI	X
Combination Curb	
Spare Belts	
Spare Filters	
Motor with Shaft Grounding	
Service Outlet - Shipped loose	X
Gas Heating Accessories	
Pilot Ignition	Std
Flame Sensing - Flame rod	X
Flame Safeguard Display	
Agency Approval - ETL and IRI	Std
FM Approved	
Minnesota Code Requirements	
High Gas Pressure Switch	
Low Gas Pressure Switch	
Visual Indication Valves	
External Gas Pressure Regulator (Ships loose)	
Warranty Options	
Unit Warranty - 1 Year	X
5 Year Burner Warranty	
10 Year Burner Warranty	

Standard Option	Std
Not Included	
Included	X

Fan Charts And Performance

Supply Fan Performance

Total Volume (CFM)	External SP (in. wg)	Total SP (in. wg)	RPM	Operating Power (hp)	Motor		Fan		
					Qty	Size (hp)	Qty	Type	Drive-Type
800	1	1.479	1543	0.46	1	1	1	Plenum	Direct

Pressure Drop (in. wg)

Weatherhood	Filter	Damper	Cooling	Heating	External	Total
0.029	-	-	-	0.45	1	1.479

Sound Performance in Accordance with AMCA

Sound Power by Octave Band								Lwa	dBA	Sones
62.5	125	250	500	1000	2000	4000	8000			
77	77	76	68	60	51	45	45	70	59	8.7

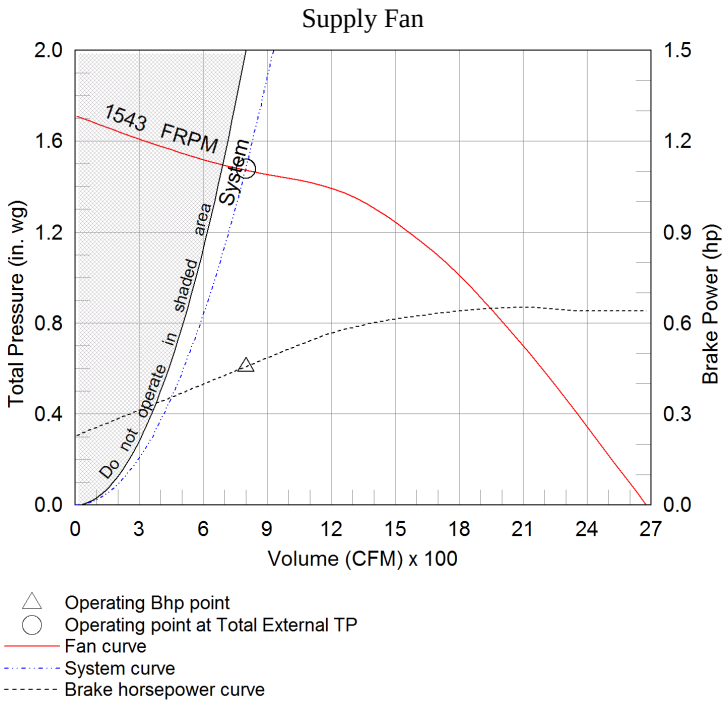

Heating Specifications

Heating Performance

Type	Gas Type	Gas Pressure		Capacity (MBH)		Temperature Rise (°F)	Performance	
		Min (in. wg)	Max (Psi)	Input	Output		EAT (°F)	LAT (°F)
Direct Gas	Natural	7	0.5	66.2	60.9	70.5	-16.0	55.0

Gas Train Details

Redundant Main Valves	Electronic Modulating Valve	Pilot Valve	Internal Regulator	Visual Indication Valve	Proof of Closure Valve	Hydraulic Main Valve(s)	Gas Pressure Switch(es)	External Regulator
Std	Std	Std	Std	-	-	-	-	-

Additional Heating Information

Agency Approvals			Temperature Control	Flame Sensing	Ignition Control	CO2 Sensor	Flame Safeguard Display
ETL and IRI	FM Approved	Minnesota Code					
Std	-	-	Discharge	Flame Rod	Pilot	-	-

Unit Details
92% thermal efficiency
Cast aluminum burner manifold with stainless steel mixing plates
Electronic modulation burner control

10 second pre-purge sequence
Low fire start

Gas Connections

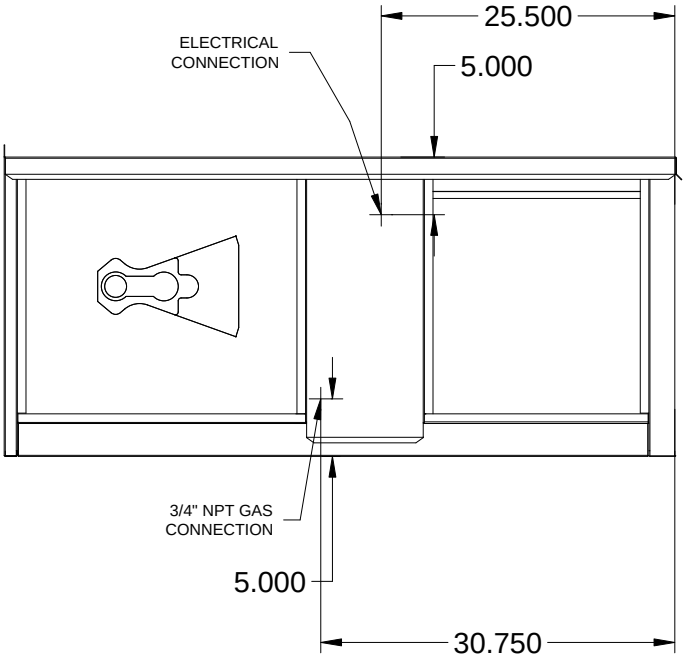

ELEVATION VIEW

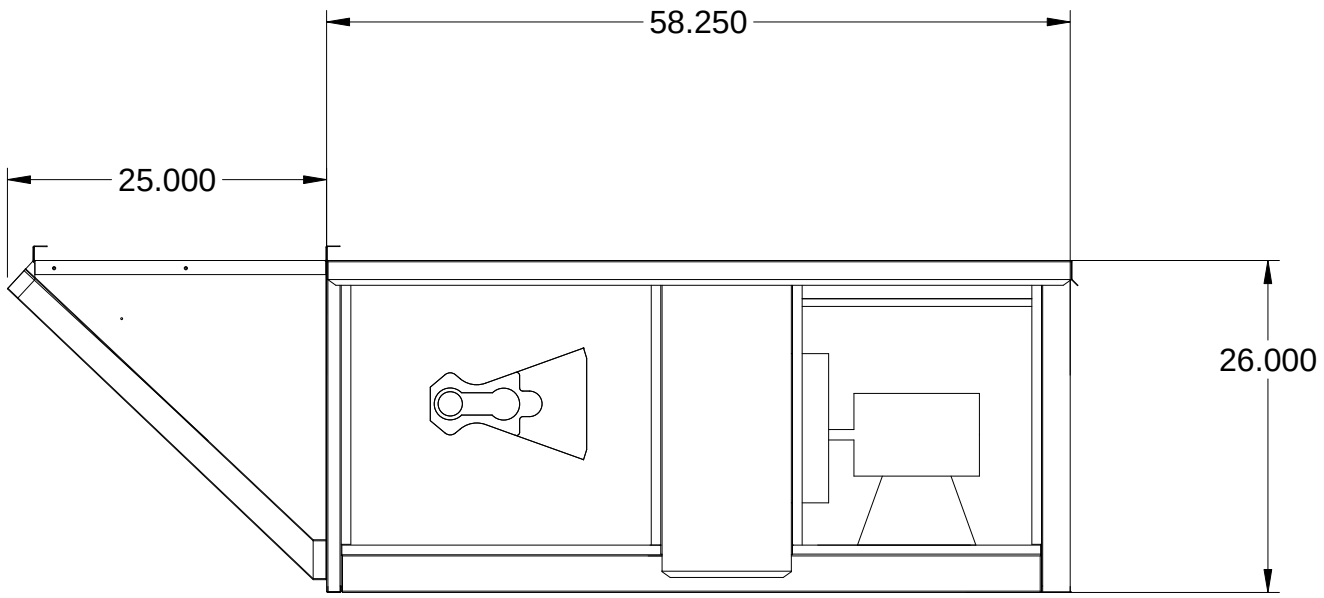

Notes - Elevation View
Standard configuration for unit access is on the right-hand side, when looking into the unit intake in the direction of airflow.
Order of unit sections is from intake of unit to discharge of unit.
Sections included on this unit: Weatherhood Section, Heating Section
Insulation: Double Wall, from Burner Section through end of unit.

PLAN VIEW

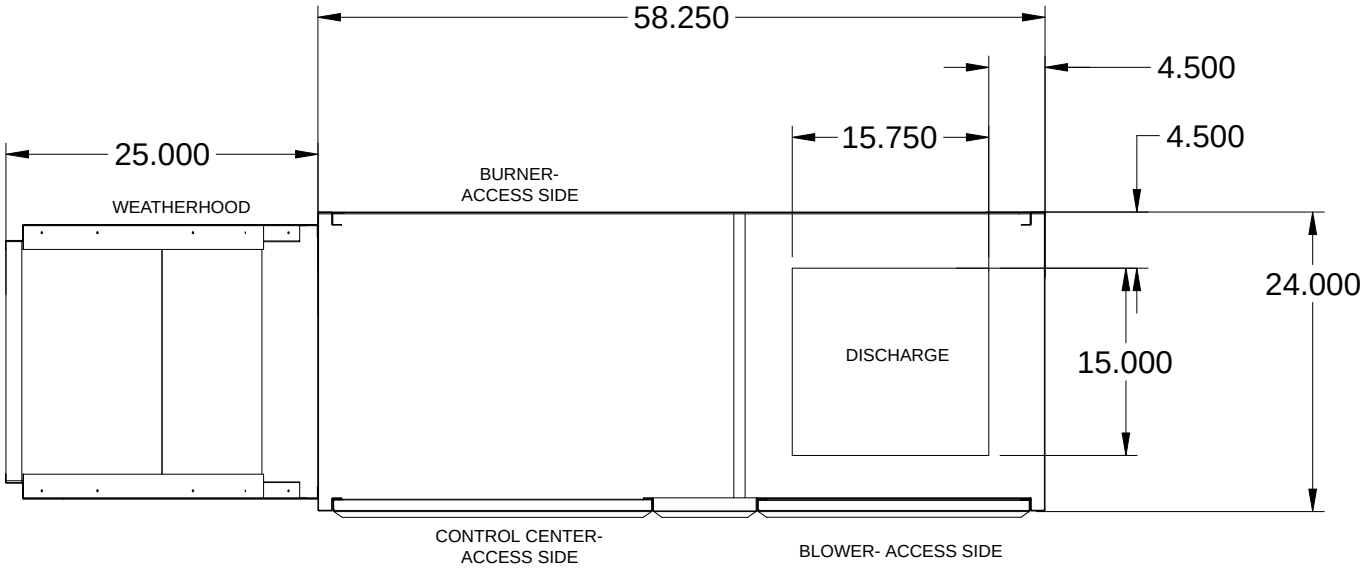

Notes - Plan View
Standard configuration for unit access is on the right-hand side, when looking into the unit intake in the direction of airflow.

END VIEW

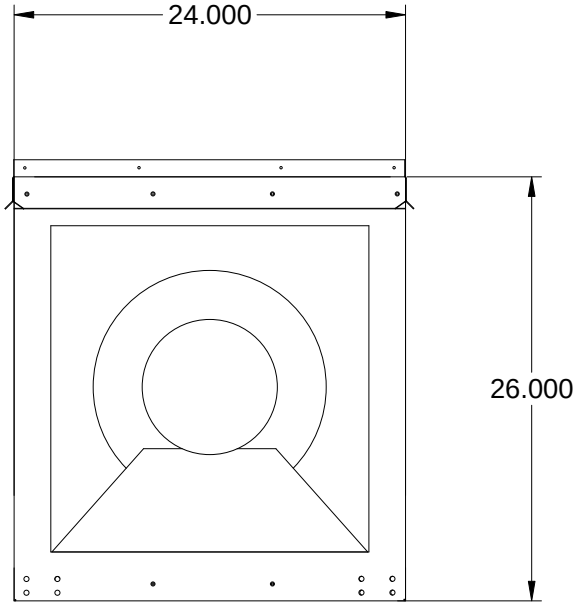

FOOTPRINT VIEW

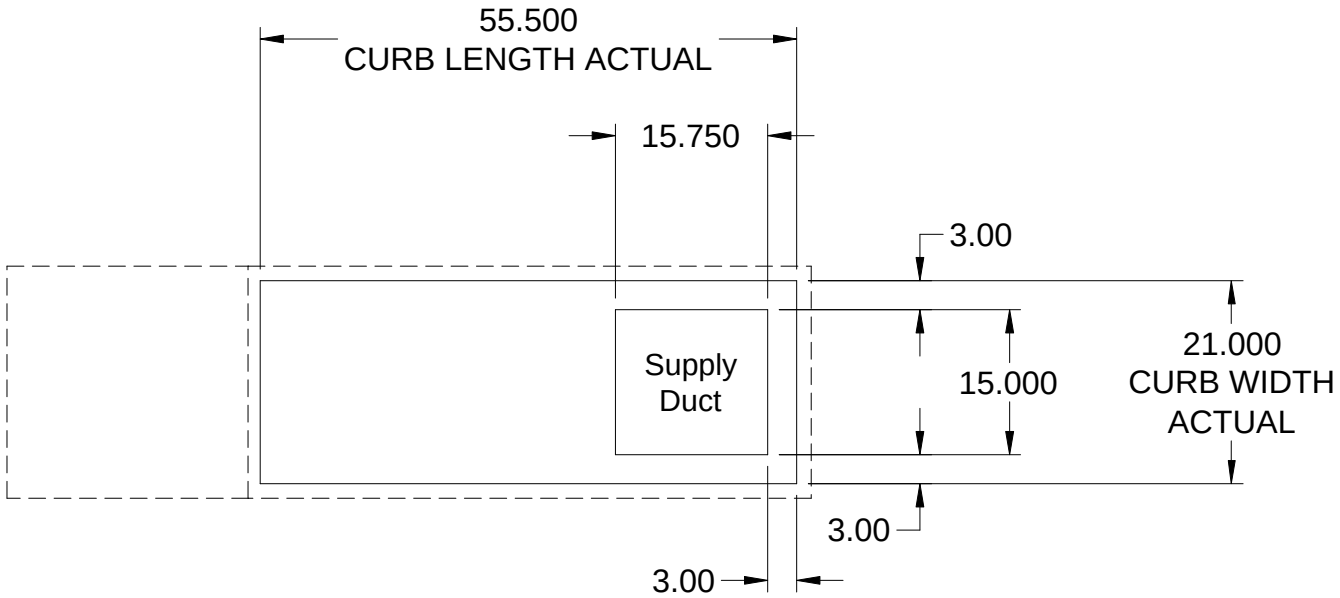

Notes - Footprint View
Minimum Roof Opening: The minimum roof opening size is the illustrated duct diameter plus 0.25 in. on all sides. For example: If the duct size is 14 x 14 in. square, the minimum roof opening size is 14.5 x 14.5 in. square.
Maximum Roof Opening: There must be a minimum perimeter of 1.75 in. between the roof opening and the roof curb. For example: If the roof curb is 75 x 30 in. square, the maximum roof opening is 71.5 x 26.5 in. inches square.
The weatherhood and filter sections of the make-up air unit extend beyond the curb. This is by design, to prevent water infiltration.

CURB VIEW

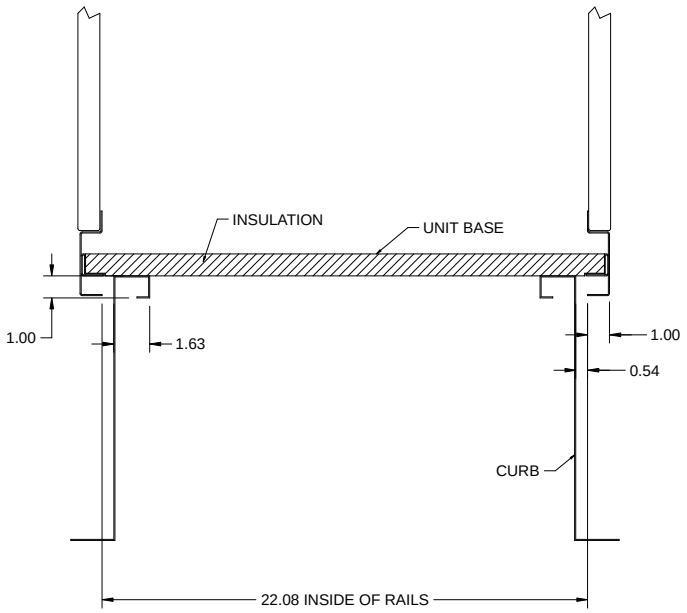

Notes - Curb View
All dimensions shown are in in.'s.
Curb Dimenision: Length = 55.5 in. Width = 21 in. Height = 20 in.

Clearance Specifications

Recommended Minimum Combustible Clearances				
	Floor (in.)	**Top (in.)**	**Sides (in.)**	**Ends (in.)**
Insulated Units	0	0	0	0
Non-Insulated Units	0	6	6	6

Notes - Combustible Clearances
Clearance to combustibles is defined as the minimum distance required between the heating source and the adjacent combustible surfaces to ensure the adjacent surface's temperature does not exceed 90 F above the ambient temperature.

Recommended Minimum Service Clearances	
Housing 32 and less (in.)	**Housing 35 and higher (in.)**
42 on the controls side of the unit	48 on the controls side of the unit

Notes - Service Clearances
To ensure ample space for component removal (evaporative cooling media, coils, filters, etc.), service clearances should be 6 in. wider than the width of the module itself.

Wiring Diagram

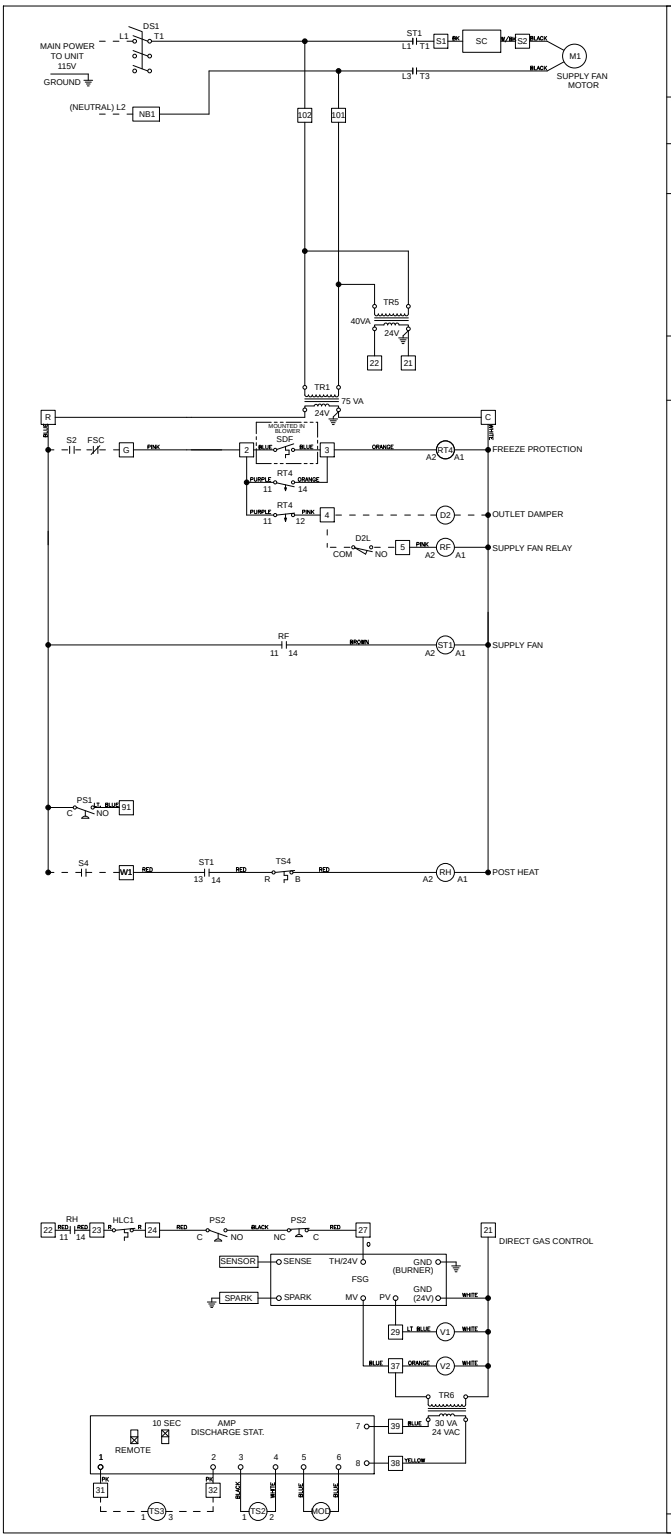

GREENHECK
Building Value in Air.

Wiring Diagram Code:

GD61N102N040N51AM19

CAUTION

UNIT SHALL BE GROUNDED IN ACCORDANCE WITH N.E.C.
POWER MUST BE OFF WHILE SERVICING.

NOTES

USE COPPER CONDUCTORS ONLY
60° C FOR TERMINALS RATED LESS THAN 100 AMPS.
75° C FOR TERMINALS RATED 100 AMPS OR MORE.

FIELD CONTROL WIRING RESISTANCE SHOULD NOT EXCEED 0.75 OHM.

FIELD WIRED – – – – –
FACTORY SUPPLIED AND WIRED ————

WIRE COLOR CODE

BK	BLACK	BL	BLUE	BR	BROWN
GY	GRAY	LT BL	LIGHT BLUE	O	ORANGE
PK	PINK	PR	PURPLE	R	RED
W	WHITE	Y	YELLOW		

LEGEND

AMP	AMPLIFIER
D2	OUTLET DAMPER
D2L	OUTLET DAMPER LIMIT
DS1	MAIN DISCONNECT SWITCH
FSC	FIRE SYSTEM CONTACT
FSG	FLAME SAFE GUARD
FU#	FUSE
HLC	HIGH LIMIT CONTROL
M#	MOTOR
MOD	MODULATING VALVE
NB1	NEUTRAL BLOCK
PS1	DIRTY FILTER SWITCH
PS2	AIR PROVING SWITCH
RF	SUPPLY FAN RELAY
RF1	FAN ENABLE RELAY
RH	HEAT RELAY
RT4	FREEZE PROTECTION TIMER SWITCH 1 and 4 DOWN - 2 and 3 UP / DIAL SET TO 4
S2	FAN SWITCH
S4	HEAT AND COOL SWITCH
SDF	SENSOR DISCHARGE - FREEZE
SG	SPARK GENERATOR
ST#	MOTOR STARTER
TR#	TRANSFORMER
TS2	DISCHARGE AIR SENSOR
TS3	TEMPERATURE SELECTOR
TS4	INLET AIR SENSOR - HEAT
V1	PILOT VALVE
V2	MAIN VALVE

Wiring Template: M19 DOC NUMBER: ---- REV: ----

Manufacturer reserves the right to change, modify, or improve this product at anytime

OUTLET DAMPER

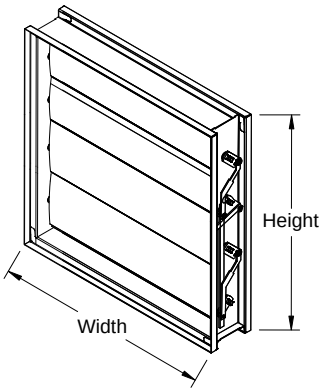

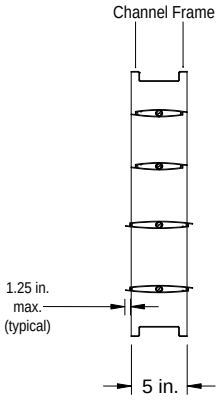

Notes: All dimensions shown are in units of inches. Width & Height furnished approximately 0.25 under size. Installation instructions available at www.greenheck.com. Customer supplied actuators configured with a jackshaft will be provided with a jackshaft this is one inch in diameter.

QTY	WIDTH	HEIGHT
1	19.5 in.	20 in.

NOTE: Width and Height are shown in nominal dimensions

Application & Design

The model VCD-34 is a low leakage control damper with thermally insulated blades. This model is intended for application in medium pressure and velocity systems. Non-jackshafted dampers will be supplied with a blade drive lever for internal actuator mounting. When external actuator mounting is specified, an extension pin with clip kit will be provided. Note: The extension pin with clip kit includes extension pin and clip.

Ratings

Pressure:	Up to 10 in. wg pressure differential
Velocity:	4,000 ft/min
Leakage:	Class 1A @ 1 in. wg, Class 1 @ up to 8 in. wg
Temperature:	Up to 250F

Manufacturer reserves right to change, alter, or improve this product at any time.

Roof Curb - GPI

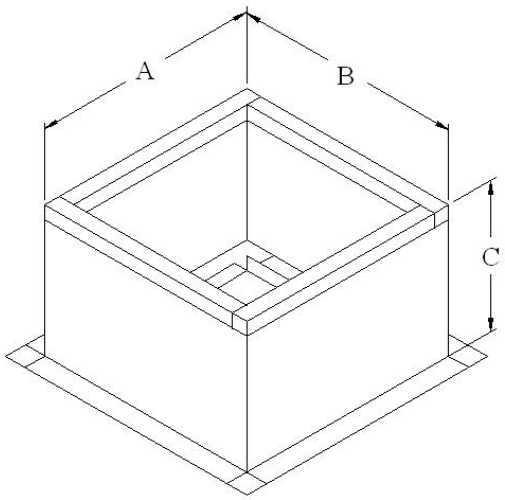

Roof Curb Dimensions		
Dimension	**Description**	**Value (in.)**
A	Length	55.5
B	Width	21
C	Height	20

GPI Curb Weight	49 lb

Construction Features and Notes
All Dimensions are actual.
Galvanized steel (18 ga.)
Straight sided with 2(in.) and wood nailer.
1 in., 3 lb. density insulation
The Roof Opening Dimension may NOT match the Structural Roof Support Dimension.
Curbs with length greater than 111.5 may ship knocked-down, dependent on manufacturing location.

Corner Weights

116 lb 55 lb

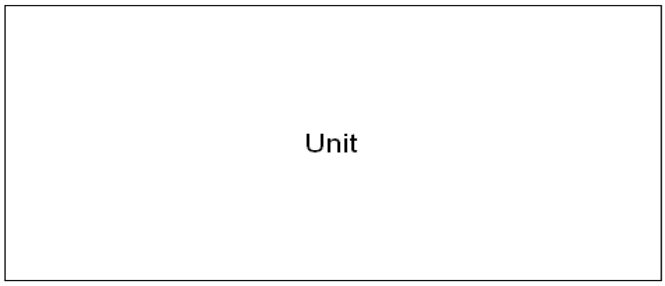

152 lb 72 lb

TSCP - Remote Control Panel

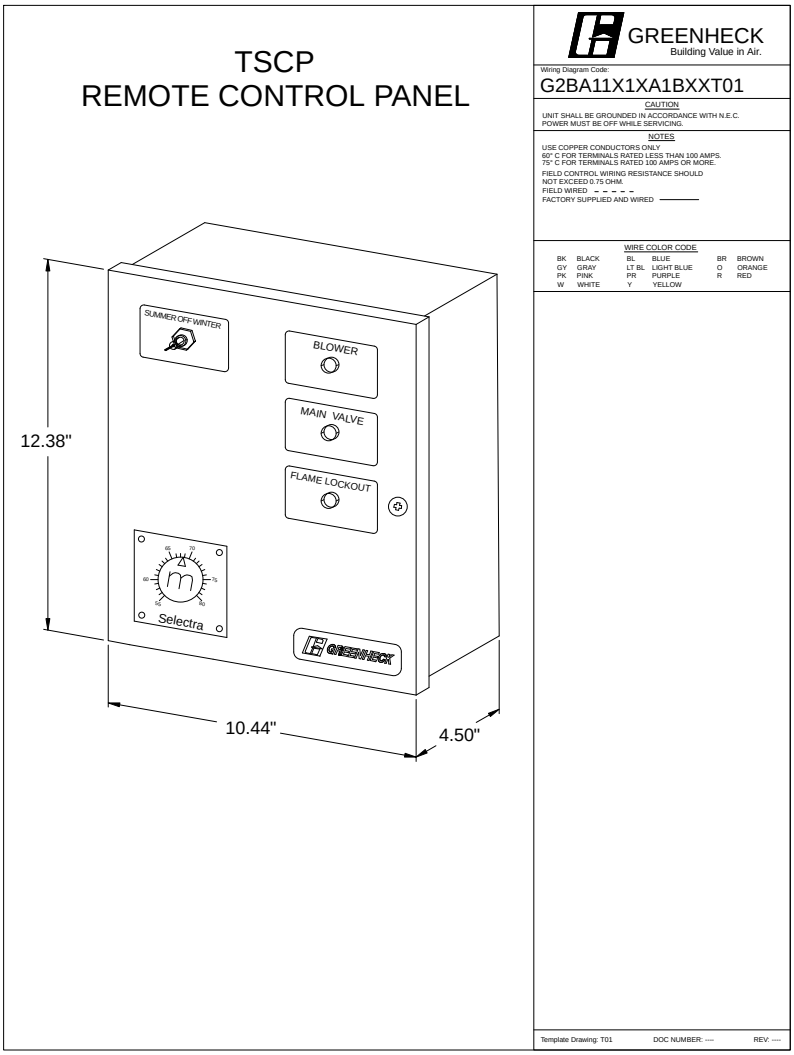

Standard Construction Features And Notes
Location of switches, lights and controls may vary.
All dimensions shown are in units of inches.
Galvanized steel with baked enamel finish.
Numbered terminal strip to match unit wiring.

Remote Panel Wiring Requirements

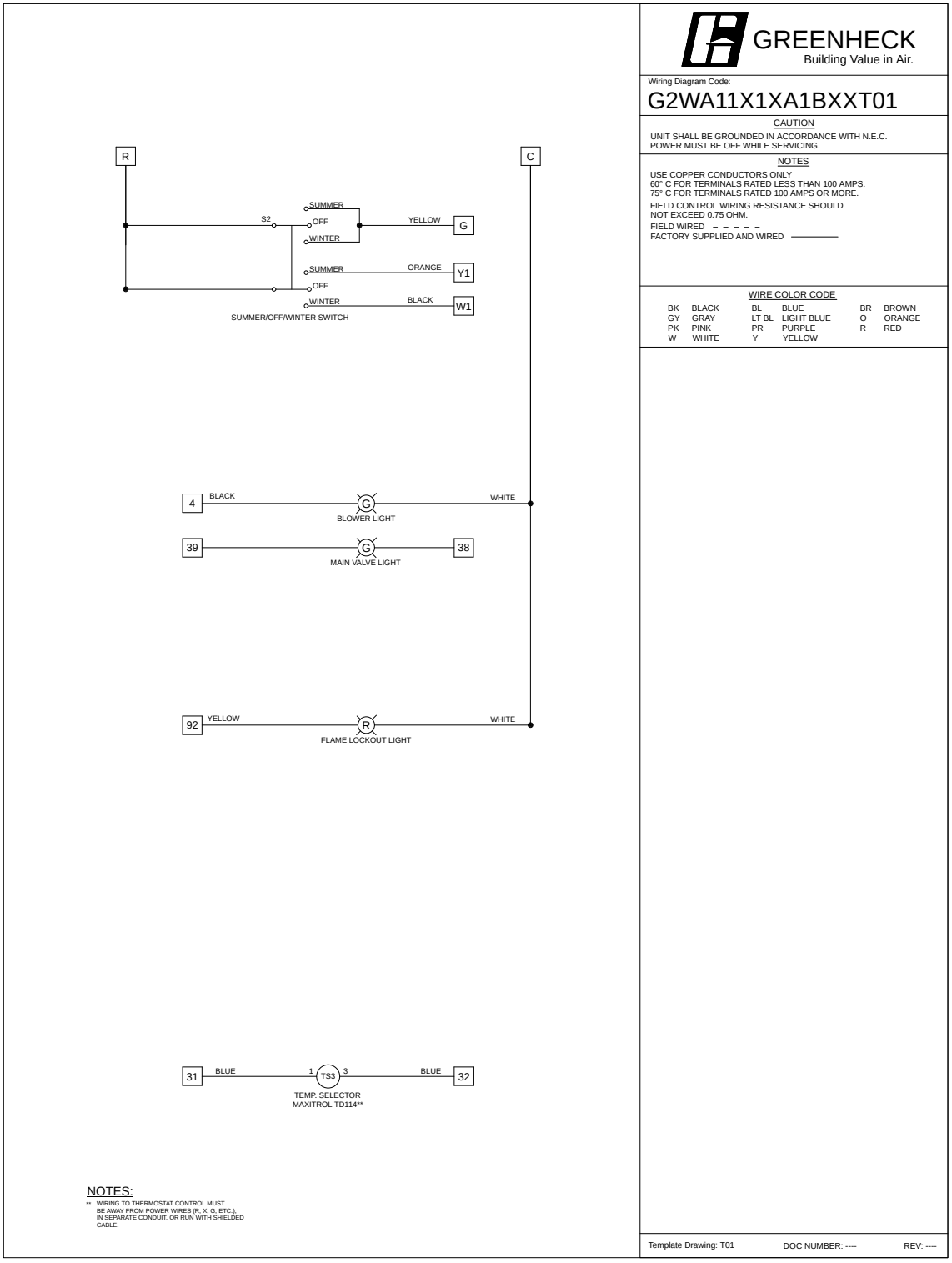

The wiring drawings details the number of the wires and the type of wire that needs to be run from the unit control center to the panel. A detailed wiring schematic will be provided with the panel when the unit ships.

SEQUENCE OF OPERATIONS

Unit Controls
The unit shall be provided from the factory with:

- 24VAC Transformer
- Terminal Strip
- Supply Fan contactor and integral motor overload protection
- Factory provided, field installed supply air insulated outlet damper with actuator
- Remote Control Panel

Remote Control Panel
A Permatector coated NEMA-1 rated remote control panel shall be shipped loose to control the basic operation of the unit. The panel shall contain the following:

- Summer / Off / Winter Switch
  Summer: Supply fan is enabled, heat is disabled.
  Off: Supply fan is disabled.
  Winter: Supply fan is enabled, heat is enabled.
- Blower Light
- Main Valve Light
- Dirty Filter Light

Unit Start-Up Sequence

- Supply Fan Enable Is Received
- Supply air outlet damper actuator is energized
- Supply air outlet damper actuator limit switch is proven closed
- Supply Fan Is Enabled

Supply Fan Sequence
The supply fan is configured for constant volume operation. The fan speed is set to the design fan RPM through the use of a speed control dial. The supply fan speed is not to be modulated.

Heating Control
A heating enable signal must be present and the supply fan must enabled before the unit will enable heating.

Heating Inlet Air Sensor (Heating Lockout)
The heating will be locked out when the outside air temperature is above the heating inlet air sensor set point (typical 65 F, adj.)

Direct Gas Fired Heating (Discharge Control)
The gas control amplifier located in the unit shall modulate the heating to maintain a supply temperature set point (55 F-90 F, adj.).

- A remote panel mounted set point dial shall control the supply temperature set point.

Building Freeze Protection
If the supply air temperature drops below 35 F for 300s (adj.), the supply fan will be disabled. Cycling the fan enable will reset the timer. This sequence is intended to prevent the unit from supply cold air into the building.

Warranty Statement for Make-Up Air

Unit Warranty

Greenheck warrants the equipment to be free from defects in material and workmanship for a period of 1 year (standard) from the shipment date.

DG Burner Extended Warranty

The warranty does not include items deemed as consumable components, including, but not limited to: Igniters, Spark rods, Spark generator, Flame rods,Flame wires, UV eye components, and associated components.

Note: Rust, discoloration of the burner material and cracks or holes smaller than .75 in. is not qualification for a defective burner.

Warranty Notes

Any component which proves defective during the warranty period will be repaired or replaced at Greenheck's sole option when returned to our factory, transportation prepaid. All warranties do not include labor costs associated with troubleshooting, removal, or installation. Greenheck will not be liable for any consequential, punitive, or incidental damages resulting from use, repair, or operation of any Greenheck product. These warranties are exclusive and are in lieu of all other warranties, whether written, oral, or implied, including the warranty of merchantability and the warranty of fitness for a particular purpose. No person (including any agent or salesperson) has authority to expand Seller's obligation beyond the terms of this warranty, or to state that the performance of the product is other than that published by Seller.

As a result of our commitment to continuous improvement, Greenheck reserves the right to change specifications without notice.

Predator 3-12.5 Ton Package

York Single Package R-410A Air Conditioner

w/Reheat

Project Name: **Sysco Design Build** | Unit Model #: **ZR078S12R5B5BCA1E1**

Quantity: **1** Tag #: **RTU-1** | System: **ZR078S12R5B5BCA1E1**

Cooling Performance		
Total gross capacity	84.6	MBH
Sensible gross capacity	62.4	MBH
Efficiency (at ARI)	11.20	EER
Integrated eff. (at ARI)	13.00	IEER
Ambient DB temp.	95.0	°F
Entering DB temp.	80.0	°F
Entering WB temp.	67.0	°F
Leaving DB temp.	60.1	°F
Leaving WB temp.	57.9	°F
Power input (w/o blower)	6.59	kW
Sound power	83	dB(A)

Refrigerant		
Refrigerant type	R-410A	
Sys1	9 lbs	
Sys2	5 lbs	8 oz

Reheat Performance		
Total capacity	35.7	MBH
Sensible capacity	7.7	MBH
Ambient DB temp.	85	°F
Entering DB temp.	75	°F
Entering WB temp.	67	°F
Leaving DB temp.	72.5	°F
Leaving WB temp.	63.4	°F
Power input (w/o blower)	5.80	kW
Gallons of water per hour	3.19	gal/hr

Gas Heating Performance		
Entering DB temp.	60	°F
Heating output capacity (Max)	96	MBH
Supply air	2910	CFM
Heating input capacity (Max)	120	MBH
Leaving DB temp.	60.0	°F
Stages	2	

Supply Air Blower Performance		
Supply air	2910	CFM
Ext. static pressure	0.8	IWG
Addl. Unit Losses (Options/Accessories)	0.2	IWG
Blower speed	1328	RPM
Max BHP of Motor (including service factor)	2.30	HP
Duct location	Bottom	
Motor rating	2.00	HP
Actual required BHP	2.11	HP
Power input	1.97	kW
Elevation	0	ft.
Drive type	BELT	
Requires field-supplied drive	true	

Outside/Mixed Air		
Outside Air Cfm	150	CFM

Electrical Data		
Power supply	575-3-60	
Unit min circuit ampacity	14.7	Amps
Unit max over-current protection	15	Amps

Dimensions & Weight						
Hgt	42	in.	Len	89	in.	Wth	59	in.
Weight with factory installed options							1152	lbs.

Clearances								
Right	12	in.	Front	36	in.	Back	36	in.
Top	72	in.	Bottom	0	in.	Left	36	in.

Note: Please refer to the tech guide for listed maximum static pressures

6.5 Ton

- York Predator units are manufactured at an ISO 9001 registered facility and each rooftop is completely computer-run tested prior to shipment.

Unit Features

- Two Stage Cooling
- 120 MBH Input Stainless Steel, Two Stage Gas Heat
- Unit Cabinet Constructed of Powder Painted Steel, Certified At 750 Hours Salt Spray Test (ASTM B-117 Standards)
- Full perimeter base rails with built in rigging capabilities
- Scroll Compressor[s]
- Dry Bulb Low Leak Economizer w/Barometric Relief and Hoods (Bottom or Horizontal End Return Only) with Economizer Fault Detection & Diagnostic (Meets ASHRAE 90.1-2013, IECC 2015, California Title 24, AMCA 511).
- 2 HP High Static Belt Drive Blower
- Solid Core Liquid Line Filter Driers
- Unit Ships with 2" Throwaway Filters
- Replacement Filters: 4 - (24" x 16"). Unit accepts 2" or 4" wide filters.
- Non-Powered Convenience Outlet
- HACR Circuit Breaker/Disconnect
- Short Circuit Current: 5kA RMS Symmetrical
- Single Point Power Connection
- Through-the-Curb and Through-the-Base Utility Connections
- Copper tube/aluminum fin condenser coil, Copper tube/aluminum fin evaporator coil
- Stainless Steel Drain Pan - Front Connection
- Tool-free maintenance with features like hinged doors for all-access panels, slide-out blower and blower motor tray

BAS Controller

- IntelliSpeed control of the VFD based on stages of cooling. Provides Single Zone VAV Fan Operation as defined by ASHRAE 90.1 section 6.4.3.10.

Standard Unit Controller: Smart Equipment Control Board

- Safety Monitoring - Monitors the High and Low-Pressure Switches, the Freezestats, the Gas Valve, if Applicable, and the Temperature Limit Switch on Gas and Electric Heat Units. The Unit Control Board will Alarm on Ignition Failures, Safety Lockouts and Repeated Limit Switch Trips.

Warranty

- One (1) Year Limited Warranty on the Complete Unit
- Five (5) Year Warranty - Compressors and Electric Heater Elements
- Fifteen (15) Year Limited Warranty - Stainless Steel Heat Exchanger

Predator 3-12.5 Ton Package

York Single Package R-410A Air Conditioner w/Reheat

Project Name: **Sysco Design Build** | Unit Model #: **ZR078S12R5B5BCA1E1**

Quantity: **1** Tag #: **RTU-1** | System: **ZR078S12R5B5BCA1E1**

Consolidated Drawing

NOTES:
1. FOR OUTDOOR USE ONLY.
2. WEIGHTS SHOWN ARE FOR COOLING ONLY UNITS.
3. MIN. CLEARANCES TO BE:
   RIGHT SIDE: 12 [305]
   LEFT SIDE: 36 [915]
   FRONT: 36 [915]
   REAR: 36 [915]
   TOP: 72 [1830]
   BOTTOM: 0 [0]
4. TO REMOVE THE SLIDE-OUT DRAIN PAIN, A REAR CLEARANCE OF 60 in (1525 mm) IS REQUIRED. IF SPACE IS UNAVAILABLE, THE DRAIN PAN CAN BE REMOVED THROUGH THE FRONT BY SEPARATING THE CORNER WALL.
5. FOR SMALLER SERVICE AND OPERATIONAL CLEARANCES CONTACT YOUR APPLICATION ENGINEERING DEPARTMENT.
6. DOWNFLOW DUCTS DESIGNED TO BE ATTACHED TO ACCESSORY ROOF CURB ONLY. IF UNIT IS MOUNTED SIDE SUPPLY, IT IS RECOMMENDED THAT THE DUCTS ARE SUPPORTED BY CROSS BRACES, AS DONE ON ACCESSORY ROOF CURBS.
7. SIDE DUCT FLANGES ARE 0.75" HIGH. BOTTOM DUCTS DO NOT HAVE FLANGES.
8. MINIMUM CONDENSATION TRAP HEIGHT SHALL BE 1.5 TIMES THE LOWEST NEGATIVE STATIC.
9. DIMENSIONS IN [ ] ARE IN MILLIMETERS OR KILOGRAMS.
10. OPTIONAL COIL GUARDS, POWER EXHAUST, GAS HEAT, ECONOMIZER, DISCONNECT SWITCH, CONVENIENCE OUTLET, AND BAROMETRIC RELIEF & FRESH AIR HOODS SHOWN.
11. DELETED
12. 8 TUBE HEAT EXCHANGER IS NOT AVAILABLE FOR 3 & 4 TON UNITS.

DIRECTION OF AIRFLOW

CENTER OF GRAVITY

TONNAGE	UNIT	OPERATING WEIGHT(LBS) (BASE UNIT)	CENTER OF GRAVITY LOCATION (BASE UNIT) X	Y	4 POINT CORNER LOADS (LBS) (BASE UNIT) A	B	C	D
6.5	ZF	860 [390]	38 [965]	24 [610]	200 [91]	149 [68]	218 [99]	292 [133]
7.5	ZF	880 [399]	38 [965]	24 [610]	205 [93]	153 [69]	223 [101]	299 [136]
5	ZH	864 [393]	40 [1016]	26 [660]	210 [95]	171 [78]	217 [99]	266 [121]
6.5 & 7.5	ZH	910 [413]	38 [965]	24 [610]	212 [96]	158 [72]	230 [104]	309 [140]
5	ZJ	770 [349]	40 [1016]	24 [610]	172 [78]	141 [64]	205 [93]	251 [114]
4	ZR	880 [399]	40 [1016]	26 [660]	214 [97]	174 [79]	221 [100]	271 [123]
5	ZR	868 [394]	40 [1016]	26 [660]	211 [96]	172 [78]	218 [99]	267 [121]
6.5	ZR	957 [435]	38 [965]	23 [584]	214 [97]	161 [73]	249 [113]	333 [151]
7.5	ZR	965 [438]	38 [965]	23 [584]	216 [98]	161 [73]	251 [114]	337 [153]
3	ZT	922 [418]	42.4 [1077]	24.7 [627]	202 [92]	184 [84]	255 [116]	281 [128]
4	ZT	960 [436]	42.5 [1080]	25.5 [648]	217 [98]	198 [90]	260 [118]	285 [129]
5	ZT	968 [439]	41.6 [1057]	25.5 [648]	223 [101]	196 [89]	257 [117]	293 [133]

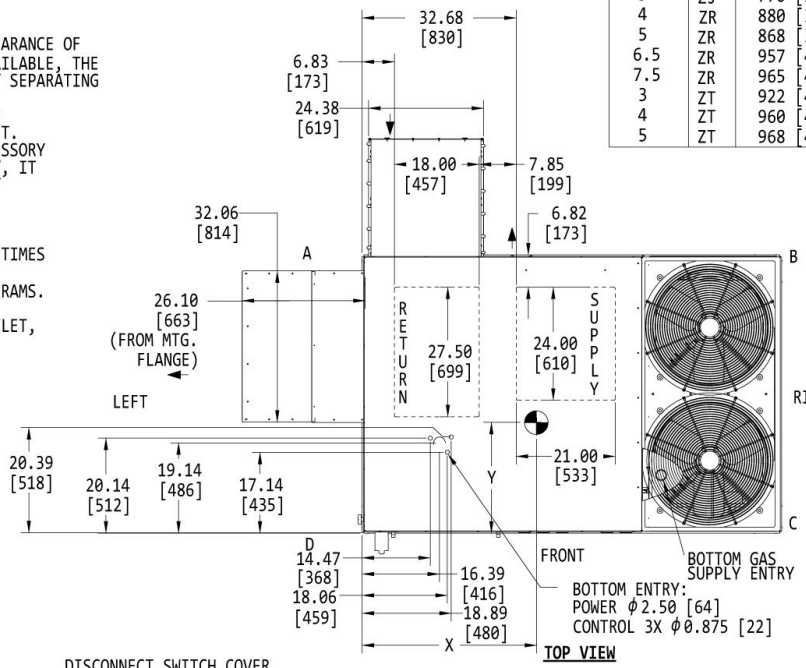

TOP VIEW

ZT/ZV

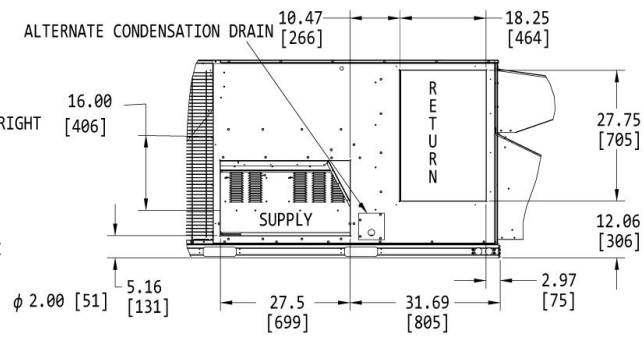

REAR (PARTIAL VIEW)
(INTAKE HOOD NOT SHOWN IN THIS VIEW)

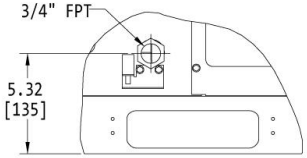

DETAIL A

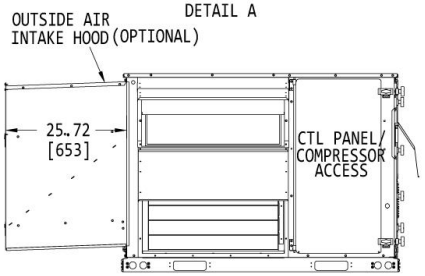

LEFT VIEW

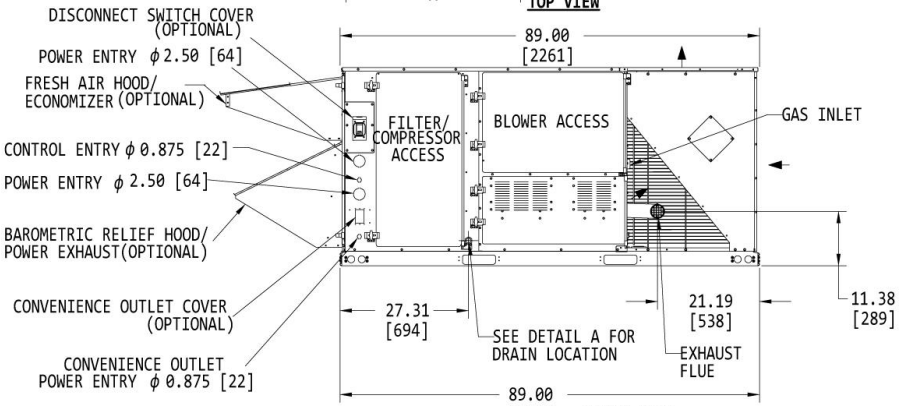

FRONT VIEW
(OPTIONAL FRONT COIL GUARD NOT SHOWN IN THIS VIEW)

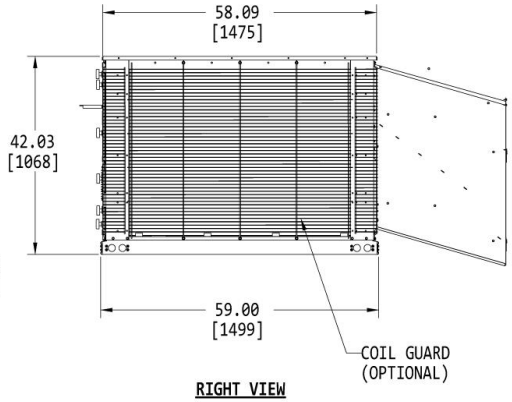

RIGHT VIEW

Predator 3-12.5 Ton Package

York Single Package R-410A Air Conditioner

w/Reheat

Project Name: **Sysco Design Build** | Unit Model #: **ZR102S12R5B5BCA1E1**

Quantity: **1** Tag #: **RTU-2** | System: **ZR102S12R5B5BCA1E1**

Cooling Performance		
Total gross capacity	111.3	MBH
Sensible gross capacity	88.9	MBH
Efficiency (at ARI)	11.20	EER
Integrated eff. (at ARI)	13.00	IEER
Ambient DB temp.	95.0	°F
Entering DB temp.	80.0	°F
Entering WB temp.	67.0	°F
Leaving DB temp.	59.5	°F
Leaving WB temp.	58.4	°F
Power input (w/o blower)	8.12	kW
Sound power	83	dB(A)

Refrigerant		
Refrigerant type	R-410A	
Sys1	11 lbs	10 oz
Sys2	10 lbs	3 oz

Reheat Performance		
Total capacity	54.5	MBH
Sensible capacity	14.1	MBH
Ambient DB temp.	85	°F
Entering DB temp.	75	°F
Entering WB temp.	67	°F
Leaving DB temp.	71.8	°F
Leaving WB temp.	63.0	°F
Power input (w/o blower)	6.60	kW
Gallons of water per hour	4.61	gal/hr

Gas Heating Performance		
Entering DB temp.	60	°F
Heating output capacity (Max)	96	MBH
Supply air	4015	CFM
Heating input capacity (Max)	120	MBH
Leaving DB temp.	60.0	°F
Stages	2	

Supply Air Blower Performance		
Supply air	4015	CFM
Ext. static pressure	0.82	IWG
Addl. Unit Losses (Options/Accessories)	0.58	IWG
Blower speed	1279	RPM
Max BHP of Motor (including service factor)	3.45	HP
Duct location	Bottom	
Motor rating	3.00	HP
Actual required BHP	3.13	HP
Power input	2.92	kW
Elevation	0	ft.
Drive type	BELT	
Requires field-supplied drive	true	

Outside/Mixed Air		
Outside Air Cfm	210	CFM

Electrical Data		
Power supply	575-3-60	
Unit min circuit ampacity	18.4	Amps
Unit max over-current protection	20	Amps

Dimensions & Weight						
Hgt	51	in.	Len	89	in.	Wth	59	in.
Weight with factory installed options							1395	lbs.

Clearances								
Right	12	in.	Front	36	in.	Back	36	in.
Top	72	in.	Bottom	0	in.	Left	36	in.

Note: Please refer to the tech guide for listed maximum static pressures

8.5 Ton

- York Predator units are manufactured at an ISO 9001 registered facility and each rooftop is completely computer-run tested prior to shipment.

Unit Features

- Two Stage Cooling
- 120 MBH Input Stainless Steel, Two Stage Gas Heat
- Unit Cabinet Constructed of Powder Painted Steel, Certified At 750 Hours Salt Spray Test (ASTM B-117 Standards)
- Full perimeter base rails with built in rigging capabilities
- Scroll Compressor[s]
- Dry Bulb Low Leak Economizer w/Barometric Relief and Hoods (Bottom or Horizontal End Return Only) with Economizer Fault Detection & Diagnostic (Meets ASHRAE 90.1-2013, IECC 2015, California Title 24, AMCA 511).
- Slide-out Blower/3 HP Belt Drive Motor Assembly
- Solid Core Liquid Line Filter Driers
- Unit Ships with 2" Throwaway Filters
- Replacement Filters: 4 - (24" x 20"). Unit accepts 2" or 4" wide filters.
- Non-Powered Convenience Outlet
- HACR Circuit Breaker/Disconnect
- Short Circuit Current: 5kA RMS Symmetrical
- Single Point Power Connection
- Through-the-Curb and Through-the-Base Utility Connections
- Copper tube/aluminum fin condenser coil, Copper tube/aluminum fin evaporator coil
- Stainless Steel Drain Pan - Front Connection
- Tool-free maintenance with features like hinged doors for all-access panels, slide-out blower and blower motor tray

BAS Controller

- IntelliSpeed control of the VFD based on stages of cooling. Provides Single Zone VAV Fan Operation as defined by ASHRAE 90.1 section 6.4.3.10.

Standard Unit Controller: Smart Equipment Control Board

- Safety Monitoring - Monitors the High and Low-Pressure Switches, the Freezestats, the Gas Valve, if Applicable, and the Temperature Limit Switch on Gas and Electric Heat Units. The Unit Control Board will Alarm on Ignition Failures, Safety Lockouts and Repeated Limit Switch Trips.

Warranty

- One (1) Year Limited Warranty on the Complete Unit
- Five (5) Year Warranty - Compressors and Electric Heater Elements
- Fifteen (15) Year Limited Warranty - Stainless Steel Heat Exchanger

Predator 3-12.5 Ton Package

York Single Package R-410A Air Conditioner w/Reheat

Project Name: **Sysco Design Build** | Unit Model #: **ZR102S12R5B5BCA1E1**

Quantity: **1** Tag #: **RTU-2** | System: **ZR102S12R5B5BCA1E1**

Consolidated Drawing

NOTES:
1. FOR OUTDOOR USE ONLY.
2. WEIGHTS SHOWN ARE FOR COOLING ONLY UNITS.
3. MIN. CLEARANCES TO BE:
   RIGHT SIDE: 12 [305]
   LEFT SIDE: 36 [915]
   FRONT: 36 [915]
   REAR: 36 [915]
   TOP: 72 [1830]
   BOTTOM: 0 [0]
4. TO REMOVE THE SLIDE-OUT DRAIN PAN, A REAR CLEARANCE OF 60 in (1525 mm) IS REQUIRED. IF SPACE IS UNAVAILABLE, THE DRAIN PAN CAN BE REMOVED THROUGH THE FRONT BY SEPARATING THE CORNER WALL.
5. FOR SMALLER SERVICE AND OPERATIONAL CLEARANCES CONTACT YOUR APPLICATION ENGINEERING DEPARTMENT.
6. DOWNFLOW DUCTS DESIGNED TO BE ATTACHED TO ACCESSORY ROOF CURB ONLY. IF UNIT IS MOUNTED SIDE SUPPLY, IT IS RECOMMENDED THAT THE DUCTS ARE SUPPORTED BY CROSS BRACES, AS DONE ON ACCESSORY ROOF CURBS.
7. SIDE DUCT FLANGES ARE 0.75" HIGH. BOTTOM DUCTS DO NOT HAVE FLANGES.
8. MINIMUM CONDENSATION TRAP HEIGHT SHALL BE 1.5 TIMES THE LOWEST NEGATIVE STATIC.
9. DIMENSIONS IN [ ] ARE IN MILLIMETERS OR KILOGRAMS.
10. OPTIONAL COIL GUARDS, POWER EXHAUST, GAS HEAT, ECONOMIZER, DISCONNECT SWITCH, CONVENIENCE OUTLET, AND BAROMETRIC RELIEF AND FRESH AIR HOODS SHOWN.
11. EXCEPT XP (HEAT PUMP) UNITS.

DIRECTION OF AIRFLOW

CENTER OF GRAVITY

TONNAGE	UNIT	OPERATING WEIGHT (LBS) (BASE UNIT)	CENTER OF GRAVITY LOCATION (BASE UNIT)		4 POINT CORNER LOADS (LBS) (BASE UNIT)			
			X	Y	A	B	C	D
8.5	ZF	1007 [458]	38 [965]	24 [610]	235 [107]	175 [79]	255 [116]	342 [155]
10	ZF	1103 [501]	38 [965]	24 [610]	257 [117]	192 [87]	279 [127]	375 [170]
8.5	ZH	1030 [467]	38 [965]	24 [610]	240 [109]	179 [81]	261 [118]	350 [159]
10	ZH	1090 [494]	38 [965]	24 [610]	254 [115]	189 [86]	276 [125]	371 [168]
6.5	ZJ	1030 [467]	39 [991]	25 [635]	245 [111]	191 [87]	260 [118]	333 [151]
7.5	ZJ	1050 [476]	39 [991]	25 [635]	250 [113]	195 [89]	265 [120]	340 [154]
8.5	ZJ	1060 [481]	38 [965]	24 [610]	247 [112]	184 [84]	268 [122]	360 [163]
10	ZJ	1070 [485]	39 [991]	24 [610]	245 [111]	191 [87]	278 [126]	357 [162]
8.5 & 10	ZR	1200 [544]	38 [965]	25.5 [648]	297 [135]	221 [100]	291 [132]	390 [177]
6.5	XP	1080 [490]	38 [965]	25 [635]	262 [119]	195 [89]	266 [121]	357 [162]
7.5	XP	1090 [494]	38 [965]	23 [584]	243 [110]	181 [82]	284 [129]	381 [173]
8.5	XP	1137 [516]	38 [965]	25.5 [648]	282 [128]	210 [95]	276 [125]	370 [168]
10	XP	1135 [515]	38 [965]	25.5 [648]	281 [127]	209 [95]	275 [125]	369 [167]

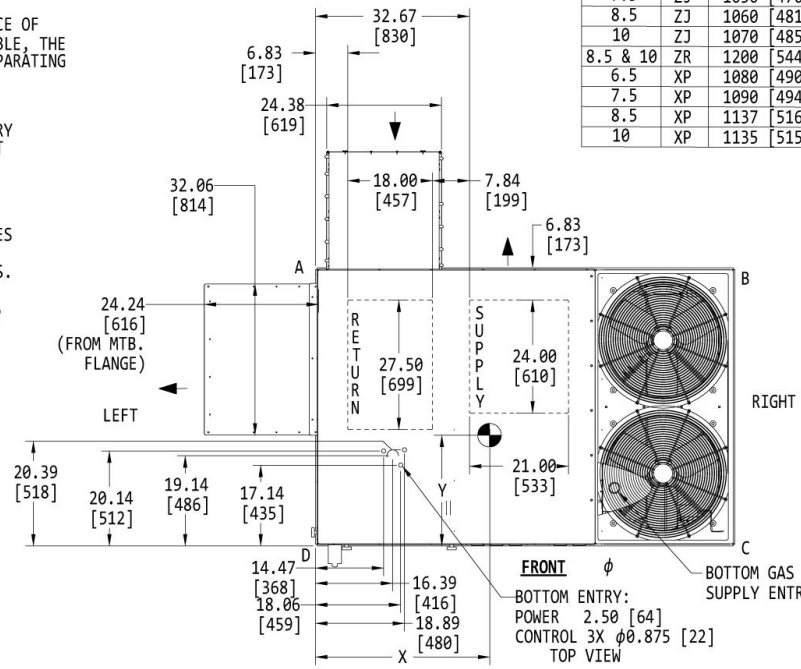

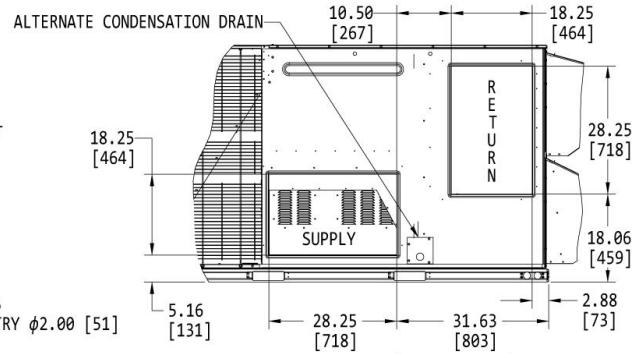

REAR (PARTIAL VIEW)
(INTAKE HOOD NOT SHOWN IN THIS VIEW)

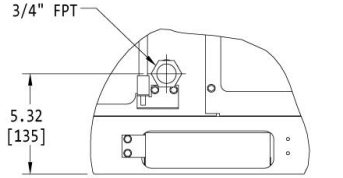

DETAIL A

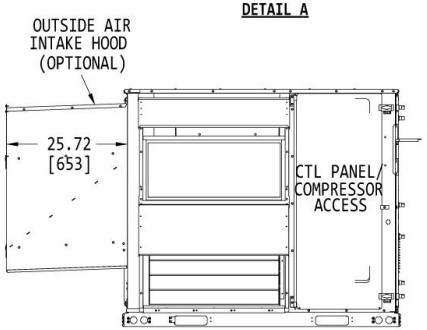

LEFT VIEW

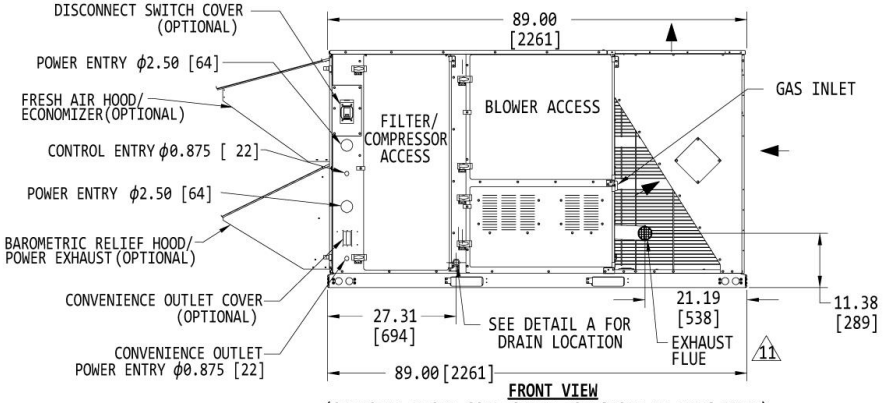

FRONT VIEW
(OPTIONAL FRONT COIL GUARD NOT SHOWN IN THIS VIEW)

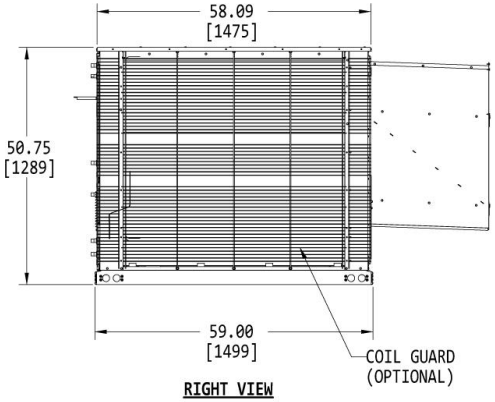

RIGHT VIEW

Predator 3-12.5 Ton Package

York Single Package R-410A Air Conditioner

Project Name: **Sysco Design Build** | Unit Model #: **ZT049S06R5B5BCA1E1**

Quantity: **1** Tag #: **RTU-3** | System: **ZT049S06R5B5BCA1E1**

Cooling Performance		
Total gross capacity	54.4	MBH
Sensible gross capacity	40.3	MBH
Seasonal Efficiency (at ARI)	17.50	SEER
Efficiency (at ARI)	14.00	EER
Ambient DB temp.	95.0	°F
Entering DB temp.	80.0	°F
Entering WB temp.	67.0	°F
Leaving DB temp.	59.5	°F
Leaving WB temp.	57.6	°F
Power input (w/o blower)	3.17	kW
Sound power	75	dB(A)

Refrigerant		
Refrigerant type	R-410A	
Sys1	13 lbs	2 oz

Gas Heating Performance		
Entering DB temp.	60	°F
Heating output capacity (Max)	49	MBH
Supply air	1815	CFM
Heating input capacity (Max)	60	MBH
Leaving DB temp.	85.0	°F
Air temp. rise	25.0	°F
SSE	81.5	%
Stages	2	

Supply Air Blower Performance		
Supply air	1815	CFM
Ext. static pressure	0.6	IWG
Addl. Unit Losses (Options/Accessories)	0.17	IWG
Blower speed	926	RPM
Max BHP of Motor (including service factor)	1.73	HP
Duct location	Bottom	
Motor rating	1.50	HP
Actual required BHP	.83	HP
Power input	0.78	kW
Elevation	0	ft.
Drive type	BELT	

Outside/Mixed Air		
Outside Air Cfm	590	CFM

Electrical Data		
Power supply	575-3-60	
Unit min circuit ampacity	10.6	Amps
Unit max over current protection	15	Amps

Dimensions & Weight					
Hgt	42 in.	Len	89 in.	Wth	59 in.
Weight with factory installed options					1145 lbs.

Clearances					
Right	12 in.	Front	36 in.	Back	36 in.
Top	72 in.	Bottom	0 in.	Left	36 in.

Note: Please refer to the tech guide for listed maximum static pressures

4 Ton

- York Predator units are manufactured at an ISO 9001 registered facility and each rooftop is completely computer-run tested prior to shipment.

Unit Features

- Two Stage Cooling
- 60 MBH Input Stainless Steel, Two Stage Gas Heat
- Unit Cabinet Constructed of Powder Painted Steel, Certified At 750 Hours Salt Spray Test (ASTM B-117 Standards)
- Full perimeter base rails with built in rigging capabilities
- Scroll Compressor[s]
- Dry Bulb Low Leak Economizer w/Barometric Relief and Hoods (Bottom or Horizontal End Return Only) with Economizer Fault Detection & Diagnostic (Meets ASHRAE 90.1-2013, IECC 2015, California Title 24, AMCA 511).
- VFD Standard
- Slide-Out Blower/1.5 HP Belt Drive Motor Assembly
- Solid Core Liquid Line Filter Driers
- Unit Ships with 2" Throwaway Filters
- Replacement Filters: 4 - (24" x 16"). Unit accepts 2" or 4" wide filters.
- Non-Powered Convenience Outlet
- HACR Circuit Breaker/Disconnect
- Short Circuit Current: 5kA RMS Symmetrical
- Single Point Power Connection
- Through-the-Curb and Through-the-Base Utility Connections
- Micro-Channel "all-aluminum" condenser coil, Copper tube/aluminum fin evaporator coil
- Stainless Steel Drain Pan - Front Connection
- Tool-free maintenance with features like hinged doors for all-access panels, slide-out blower and blower motor tray

BAS Controller

- IntelliSpeed control of the VFD based on stages of cooling. Provides Single Zone VAV Fan Operation as defined by ASHRAE 90.1 section 6.4.3.10.

Standard Unit Controller: Smart Equipment Control Board

- Safety Monitoring - Monitors the High and Low-Pressure Switches, the Freezestats, the Gas Valve, if Applicable, and the Temperature Limit Switch on Gas and Electric Heat Units. The Unit Control Board will Alarm on Ignition Failures, Safety Lockouts and Repeated Limit Switch Trips.

Warranty

- One (1) Year Limited Warranty on the Complete Unit
- Five (5) Year Warranty - Compressors and Electric Heater Elements
- Fifteen (15) Year Limited Warranty - Stainless Steel Heat Exchanger

Predator 3-12.5 Ton Package

York Single Package R-410A Air Conditioner

Project Name: **Sysco Design Build** | Unit Model #: **ZT049S06R5B5BCA1E1**

Quantity: **1** Tag #: **RTU-3** | System: **ZT049S06R5B5BCA1E1**

Consolidated Drawing

NOTES:
1. FOR OUTDOOR USE ONLY.
2. WEIGHTS SHOWN ARE FOR COOLING ONLY UNITS.
3. MIN. CLEARANCES TO BE:
   RIGHT SIDE: 12 [305]
   LEFT SIDE: 36 [915]
   FRONT: 36 [915]
   REAR: 36 [915]
   TOP: 72 [1830]
   BOTTOM: 0 [0]
4. TO REMOVE THE SLIDE-OUT DRAIN PAIN, A REAR CLEARANCE OF 60 in (1525 mm) IS REQUIRED. IF SPACE IS UNAVAILABLE, THE DRAIN PAN CAN BE REMOVED THROUGH THE FRONT BY SEPARATING THE CORNER WALL.
5. FOR SMALLER SERVICE AND OPERATIONAL CLEARANCES CONTACT YOUR APPLICATION ENGINEERING DEPARTMENT.
6. DOWNFLOW DUCTS DESIGNED TO BE ATTACHED TO ACCESSORY ROOF CURB ONLY. IF UNIT IS MOUNTED SIDE SUPPLY, IT IS RECOMMENDED THAT THE DUCTS ARE SUPPORTED BY CROSS BRACES, AS DONE ON ACCESSORY ROOF CURBS.
7. SIDE DUCT FLANGES ARE 0.75" HIGH. BOTTOM DUCTS DO NOT HAVE FLANGES.
8. MINIMUM CONDENSATION TRAP HEIGHT SHALL BE 1.5 TIMES THE LOWEST NEGATIVE STATIC.
9. DIMENSIONS IN [ ] ARE IN MILLIMETERS OR KILOGRAMS.
10. OPTIONAL COIL GUARDS, POWER EXHAUST, GAS HEAT, ECONOMIZER, DISCONNECT SWITCH, CONVENIENCE OUTLET, AND BAROMETRIC RELIEF & FRESH AIR HOODS SHOWN.
11. DELETED
12. 8 TUBE HEAT EXCHANGER IS NOT AVAILABLE FOR 3 & 4 TON UNITS.

DIRECTION OF AIRFLOW

CENTER OF GRAVITY

TONNAGE	UNIT	OPERATING WEIGHT(LBS) (BASE UNIT)	CENTER OF GRAVITY LOCATION (BASE UNIT) X	Y	4 POINT CORNER LOADS (LBS) (BASE UNIT) A	B	C	D
6.5	ZF	860 [390]	38 [965]	24 [610]	200 [91]	149 [68]	218 [99]	292 [133]
7.5	ZF	880 [399]	38 [965]	24 [610]	205 [93]	153 [69]	223 [101]	299 [136]
5	ZH	864 [393]	40 [1016]	26 [660]	210 [95]	171 [78]	217 [99]	266 [121]
6.5 & 7.5	ZH	910 [413]	38 [965]	24 [610]	212 [96]	158 [72]	230 [104]	309 [140]
5	ZJ	770 [349]	40 [1016]	24 [610]	172 [78]	141 [64]	205 [93]	251 [114]
4	ZR	880 [399]	40 [1016]	26 [660]	214 [97]	174 [79]	221 [100]	271 [123]
5	ZR	868 [394]	40 [1016]	26 [660]	211 [96]	172 [78]	218 [99]	267 [121]
6.5	ZR	957 [435]	38 [965]	23 [584]	214 [97]	161 [73]	249 [113]	333 [151]
7.5	ZR	965 [438]	38 [965]	23 [584]	216 [98]	161 [73]	251 [114]	337 [153]
3	ZT	922 [418]	42.4 [1077]	24.7 [627]	202 [92]	184 [84]	255 [116]	281 [128]
4	ZT	960 [436]	42.5 [1080]	25.5 [648]	217 [98]	198 [90]	260 [118]	285 [129]
5	ZT	968 [439]	41.6 [1057]	25.5 [648]	223 [101]	196 [89]	257 [117]	293 [133]

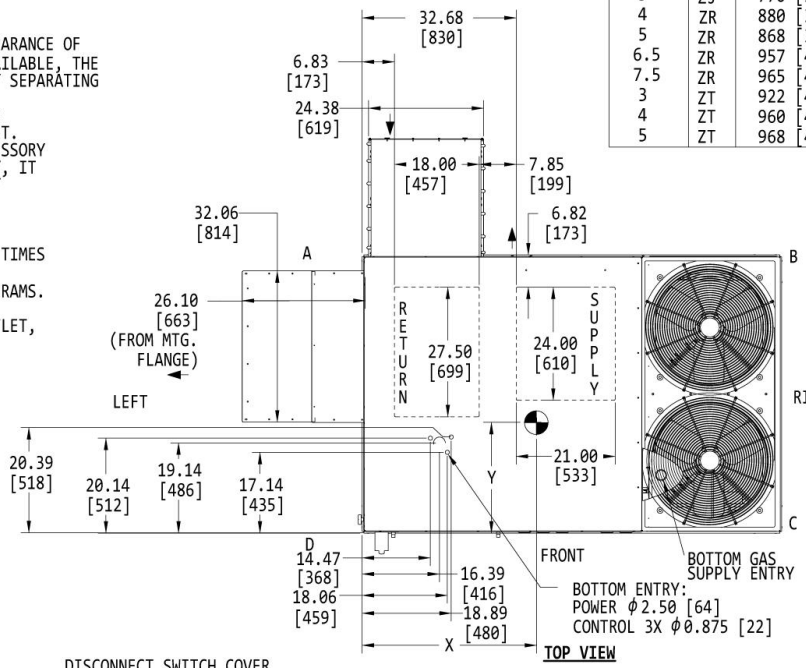

TOP VIEW

ZT/ZV

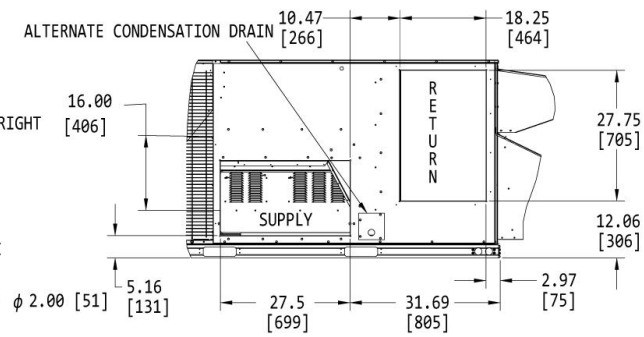

REAR (PARTIAL VIEW)
(INTAKE HOOD NOT SHOWN IN THIS VIEW)

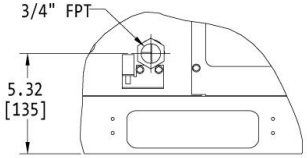

DETAIL A

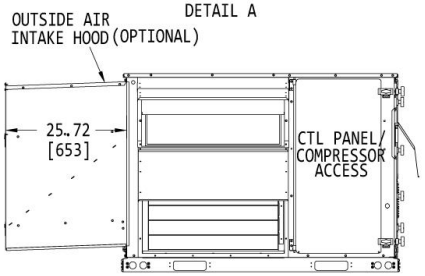

LEFT VIEW

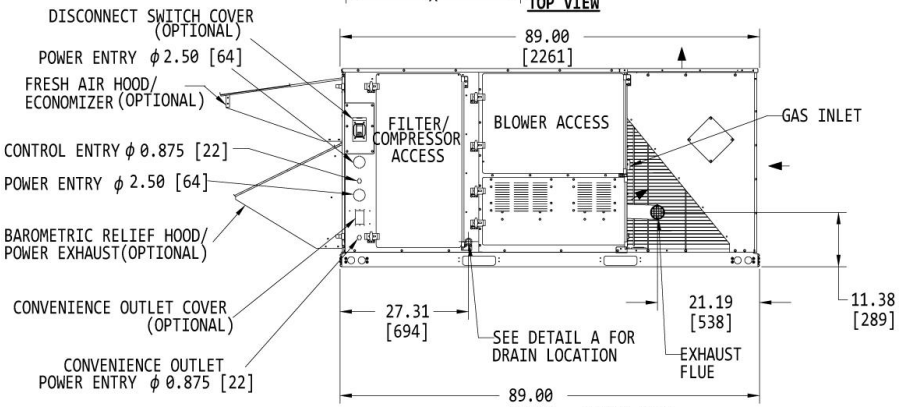

FRONT VIEW
(OPTIONAL FRONT COIL GUARD NOT SHOWN IN THIS VIEW)

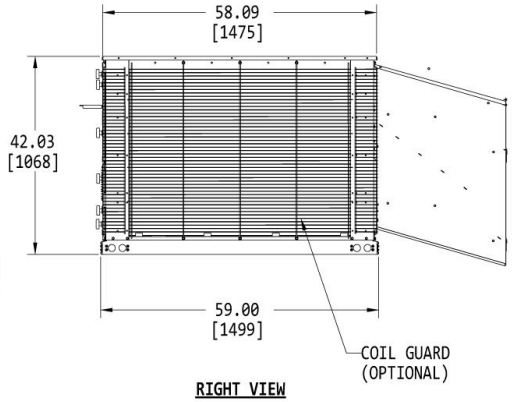

RIGHT VIEW

Predator 3-12.5 Ton Package

York Single Package R-410A Air Conditioner

w/Reheat

Project Name: **Sysco Design Build** | Unit Model #: **ZR078S12R5B5BCA1E1**

Quantity: **1** Tag #: **RTU-4** | System: **ZR078S12R5B5BCA1E1**

Cooling Performance		
Total gross capacity	85.3	MBH
Sensible gross capacity	61.7	MBH
Efficiency (at ARI)	11.20	EER
Integrated eff. (at ARI)	13.00	IEER
Ambient DB temp.	95.0	°F
Entering DB temp.	80.0	°F
Entering WB temp.	67.0	°F
Leaving DB temp.	59.3	°F
Leaving WB temp.	57.2	°F
Power input (w/o blower)	6.62	kW
Sound power	83	dB(A)

Refrigerant		
Refrigerant type	R-410A	
Sys1	9 lbs	
Sys2	5 lbs	8 oz

Reheat Performance		
Total capacity	35.5	MBH
Sensible capacity	6.8	MBH
Ambient DB temp.	85	°F
Entering DB temp.	75	°F
Entering WB temp.	67	°F
Leaving DB temp.	72.7	°F
Leaving WB temp.	63.2	°F
Power input (w/o blower)	5.87	kW
Gallons of water per hour	3.27	gal/hr

Gas Heating Performance		
Entering DB temp.	60	°F
Heating output capacity (Max)	96	MBH
Supply air	2755	CFM
Heating input capacity (Max)	120	MBH
Leaving DB temp.	60.0	°F
Stages	2	

Supply Air Blower Performance		
Supply air	2755	CFM
Ext. static pressure	1.0	IWG
Addl. Unit Losses (Options/Accessories)	0.18	IWG
Blower speed	1351	RPM
Max BHP of Motor (including service factor)	2.30	HP
Duct location	Bottom	
Motor rating	2.00	HP
Actual required BHP	2.05	HP
Power input	1.91	kW
Elevation	0	ft.
Drive type	BELT	
Requires field-supplied drive	true	

Outside/Mixed Air		
Outside Air Cfm	130	CFM

Electrical Data		
Power supply	575-3-60	
Unit min circuit ampacity	14.7	Amps
Unit max over-current protection	15	Amps

Dimensions & Weight						
Hgt	42	in.	Len	89	in.	Wth	59 in.
Weight with factory installed options							1152 lbs.

Clearances							
Right	12	in.	Front	36	in.	Back	36 in.
Top	72	in.	Bottom	0	in.	Left	36 in.

Note: Please refer to the tech guide for listed maximum static pressures

6.5 Ton

- York Predator units are manufactured at an ISO 9001 registered facility and each rooftop is completely computer-run tested prior to shipment.

Unit Features

- Two Stage Cooling
- 120 MBH Input Stainless Steel, Two Stage Gas Heat
- Unit Cabinet Constructed of Powder Painted Steel, Certified At 750 Hours Salt Spray Test (ASTM B-117 Standards)
- Full perimeter base rails with built in rigging capabilities
- Scroll Compressor[s]
- Dry Bulb Low Leak Economizer w/Barometric Relief and Hoods (Bottom or Horizontal End Return Only) with Economizer Fault Detection & Diagnostic (Meets ASHRAE 90.1-2013, IECC 2015, California Title 24, AMCA 511).
- 2 HP High Static Belt Drive Blower
- Solid Core Liquid Line Filter Driers
- Unit Ships with 2" Throwaway Filters
- Replacement Filters: 4 - (24" x 16"). Unit accepts 2" or 4" wide filters.
- Non-Powered Convenience Outlet
- HACR Circuit Breaker/Disconnect
- Short Circuit Current: 5kA RMS Symmetrical
- Single Point Power Connection
- Through-the-Curb and Through-the-Base Utility Connections
- Copper tube/aluminum fin condenser coil, Copper tube/aluminum fin evaporator coil
- Stainless Steel Drain Pan - Front Connection
- Tool-free maintenance with features like hinged doors for all-access panels, slide-out blower and blower motor tray

BAS Controller

- IntelliSpeed control of the VFD based on stages of cooling. Provides Single Zone VAV Fan Operation as defined by ASHRAE 90.1 section 6.4.3.10.

Standard Unit Controller: Smart Equipment Control Board

- Safety Monitoring - Monitors the High and Low-Pressure Switches, the Freezestats, the Gas Valve, if Applicable, and the Temperature Limit Switch on Gas and Electric Heat Units. The Unit Control Board will Alarm on Ignition Failures, Safety Lockouts and Repeated Limit Switch Trips.

Warranty

- One (1) Year Limited Warranty on the Complete Unit
- Five (5) Year Warranty - Compressors and Electric Heater Elements
- Fifteen (15) Year Limited Warranty - Stainless Steel Heat Exchanger

Predator 3-12.5 Ton Package

York Single Package R-410A Air Conditioner w/Reheat

Project Name: **Sysco Design Build** | Unit Model #: **ZR078S12R5B5BCA1E1**

Quantity: **1** Tag #: **RTU-4** | System: **ZR078S12R5B5BCA1E1**

Consolidated Drawing

NOTES:
1. FOR OUTDOOR USE ONLY.
2. WEIGHTS SHOWN ARE FOR COOLING ONLY UNITS.
3. MIN. CLEARANCES TO BE:
   RIGHT SIDE: 12 [305]
   LEFT SIDE: 36 [915]
   FRONT: 36 [915]
   REAR: 36 [915]
   TOP: 72 [1830]
   BOTTOM: 0 [0]
4. TO REMOVE THE SLIDE-OUT DRAIN PAIN, A REAR CLEARANCE OF 60 in (1525 mm) IS REQUIRED. IF SPACE IS UNAVAILABLE, THE DRAIN PAN CAN BE REMOVED THROUGH THE FRONT BY SEPARATING THE CORNER WALL.
5. FOR SMALLER SERVICE AND OPERATIONAL CLEARANCES CONTACT YOUR APPLICATION ENGINEERING DEPARTMENT.
6. DOWNFLOW DUCTS DESIGNED TO BE ATTACHED TO ACCESSORY ROOF CURB ONLY. IF UNIT IS MOUNTED SIDE SUPPLY, IT IS RECOMMENDED THAT THE DUCTS ARE SUPPORTED BY CROSS BRACES, AS DONE ON ACCESSORY ROOF CURBS.
7. SIDE DUCT FLANGES ARE 0.75" HIGH. BOTTOM DUCTS DO NOT HAVE FLANGES.
8. MINIMUM CONDENSATION TRAP HEIGHT SHALL BE 1.5 TIMES THE LOWEST NEGATIVE STATIC.
9. DIMENSIONS IN [ ] ARE IN MILLIMETERS OR KILOGRAMS.
10. OPTIONAL COIL GUARDS, POWER EXHAUST, GAS HEAT, ECONOMIZER, DISCONNECT SWITCH, CONVENIENCE OUTLET, AND BAROMETRIC RELIEF & FRESH AIR HOODS SHOWN.
11. DELETED
12. 8 TUBE HEAT EXCHANGER IS NOT AVAILABLE FOR 3 & 4 TON UNITS.

DIRECTION OF AIRFLOW

CENTER OF GRAVITY

TONNAGE	UNIT	OPERATING WEIGHT(LBS) (BASE UNIT)	CENTER OF GRAVITY LOCATION (BASE UNIT) X	Y	4 POINT CORNER LOADS (LBS) (BASE UNIT) A	B	C	D
6.5	ZF	860 [390]	38 [965]	24 [610]	200 [91]	149 [68]	218 [99]	292 [133]
7.5	ZF	880 [399]	38 [965]	24 [610]	205 [93]	153 [69]	223 [101]	299 [136]
5	ZH	864 [393]	40 [1016]	26 [660]	210 [95]	171 [78]	217 [99]	266 [121]
6.5 & 7.5	ZH	910 [413]	38 [965]	24 [610]	212 [96]	158 [72]	230 [104]	309 [140]
5	ZJ	770 [349]	40 [1016]	24 [610]	172 [78]	141 [64]	205 [93]	251 [114]
4	ZR	880 [399]	40 [1016]	26 [660]	214 [97]	174 [79]	221 [100]	271 [123]
5	ZR	868 [394]	40 [1016]	26 [660]	211 [96]	172 [78]	218 [99]	267 [121]
6.5	ZR	957 [435]	38 [965]	23 [584]	214 [97]	161 [73]	249 [113]	333 [151]
7.5	ZR	965 [438]	38 [965]	23 [584]	216 [98]	161 [73]	251 [114]	337 [153]
3	ZT	922 [418]	42.4 [1077]	24.7 [627]	202 [92]	184 [84]	255 [116]	281 [128]
4	ZT	960 [436]	42.5 [1080]	25.5 [648]	217 [98]	198 [90]	260 [118]	285 [129]
5	ZT	968 [439]	41.6 [1057]	25.5 [648]	223 [101]	196 [89]	257 [117]	293 [133]

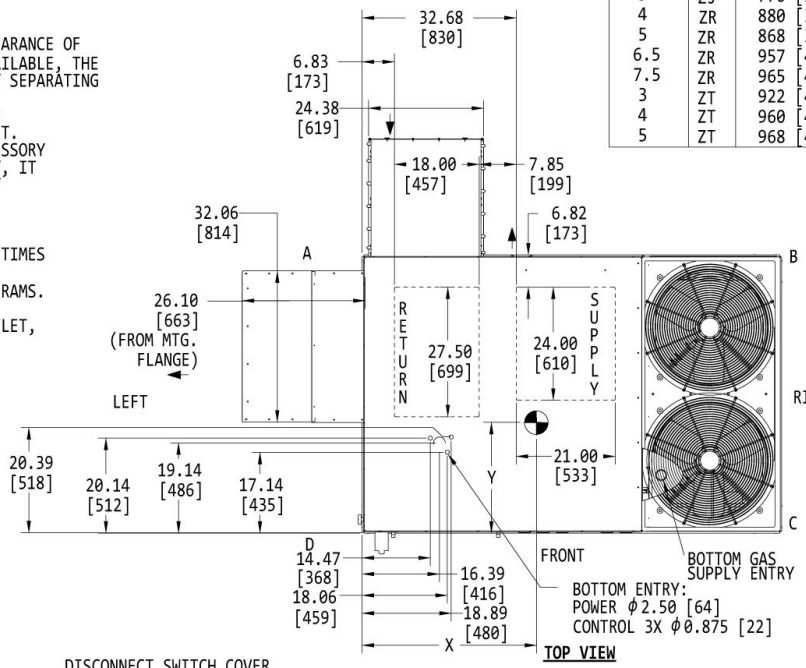

TOP VIEW

ZT/ZV

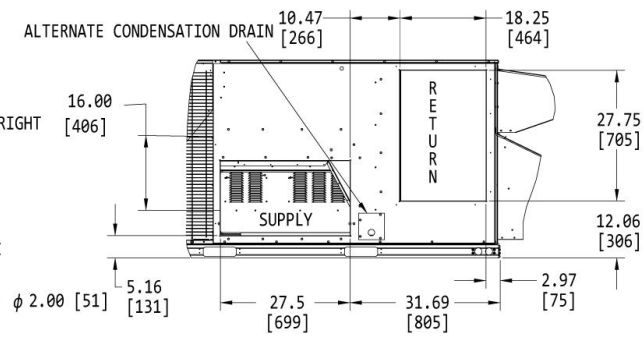

REAR (PARTIAL VIEW)
(INTAKE HOOD NOT SHOWN IN THIS VIEW)

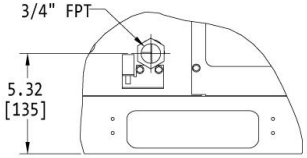

DETAIL A

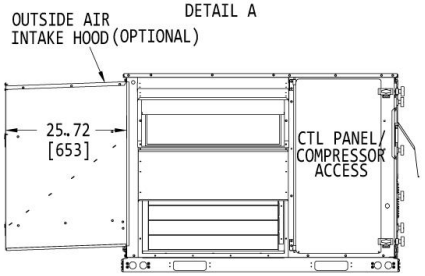

LEFT VIEW

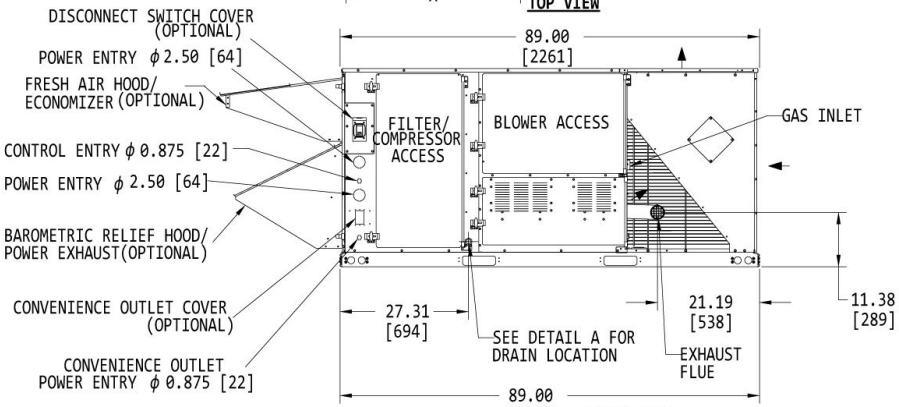

FRONT VIEW
(OPTIONAL FRONT COIL GUARD NOT SHOWN IN THIS VIEW)

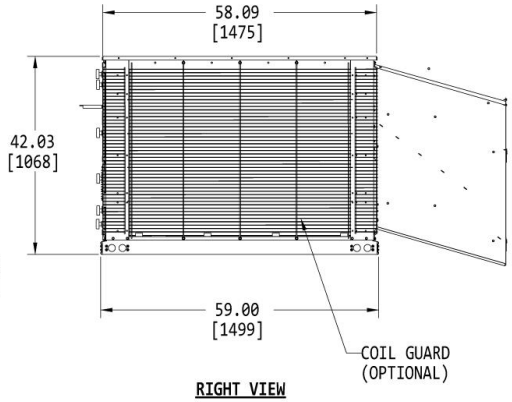

RIGHT VIEW

Predator 3-12.5 Ton Package

York Single Package R-410A Air Conditioner

Project Name: **Sysco Design Build** | Unit Model #: **ZT037S06R5B5BCA1E2**

Quantity: **1** Tag #: **RTU-5** | System: **ZT037S06R5B5BCA1E2**

Cooling Performance		
Total gross capacity	40.0	MBH
Sensible gross capacity	27.3	MBH
Seasonal Efficiency (at ARI)	17.00	SEER
Efficiency (at ARI)	13.05	EER
Ambient DB temp.	95.0	°F
Entering DB temp.	80.0	°F
Entering WB temp.	67.0	°F
Leaving DB temp.	58.9	°F
Leaving WB temp.	56.4	°F
Power input (w/o blower)	2.38	kW
Sound power	75	dB(A)
Refrigerant		
Refrigerant type	R-410A	
Sys1	10 lbs	5 oz
Gas Heating Performance		
Entering DB temp.	60	°F
Heating output capacity (Max)	49	MBH
Supply air	1200	CFM
Heating input capacity (Max)	60	MBH
Leaving DB temp.	97.8	°F
Air temp. rise	37.8	°F
SSE	81.5	%
Stages	2	
Supply Air Blower Performance		
Supply air	1200	CFM
Ext. static pressure	1.0	IWG
Blower speed	911	RPM
Max BHP of Motor (including service factor)	1.73	HP
Duct location	Bottom	
Motor rating	1.50	HP
Actual required BHP	.69	HP
Power input	0.64	kW
Elevation	0	ft.
Drive type	BELT	
Outside/Mixed Air		
Outside Air Cfm	450	CFM
Electrical Data		
Power supply	575-3-60	
Unit min circuit ampacity	9.8	Amps
Unit max over-current protection	15	Amps

Dimensions & Weight					
Hgt	42 in.	Len	89 in.	Wth	59 in.
Weight with factory installed options					1107 lbs.

Clearances					
Right	12 in.	Front	36 in.	Back	36 in.
Top	72 in.	Bottom	0 in.	Left	36 in.

Note: Please refer to the tech guide for listed maximum static pressures

3 Ton

- York Predator units are manufactured at an ISO 9001 registered facility and each rooftop is completely computer-run tested prior to shipment.

Unit Features

- Two Stage Cooling
- 60 MBH Input Stainless Steel, Two Stage Gas Heat
- Unit Cabinet Constructed of Powder Painted Steel, Certified At 750 Hours Salt Spray Test (ASTM B-117 Standards)
- Full perimeter base rails with built in rigging capabilities
- Scroll Compressor[s]
- Dry Bulb Low Leak Economizer w/Barometric Relief and Hoods (Bottom or Horizontal End Return Only) with Economizer Fault Detection & Diagnostic (Meets ASHRAE 90.1-2013, IECC 2015, California Title 24, AMCA 511).
- VFD Standard
- Slide-Out Blower/1.5 HP Belt Drive Motor Assembly
- Solid Core Liquid Line Filter Driers
- Unit Ships with 2" Throwaway Filters
- Replacement Filters: 4 - (24" x 16"). Unit accepts 2" or 4" wide filters.
- Non-Powered Convenience Outlet
- HACR Circuit Breaker/Disconnect
- Short Circuit Current: 5kA RMS Symmetrical
- Single Point Power Connection
- Through-the-Curb and Through-the-Base Utility Connections
- Micro-Channel "all-aluminum" condenser coil, Copper tube/aluminum fin evaporator coil
- Stainless Steel Drain Pan - Front Connection
- Tool-free maintenance with features like hinged doors for all-access panels, slide-out blower and blower motor tray

BAS Controller

- IntelliSpeed control of the VFD based on stages of cooling. Provides Single Zone VAV Fan Operation as defined by ASHRAE 90.1 section 6.4.3.10.

Standard Unit Controller: Smart Equipment Control Board

- Safety Monitoring - Monitors the High and Low-Pressure Switches, the Freezestats, the Gas Valve, if Applicable, and the Temperature Limit Switch on Gas and Electric Heat Units. The Unit Control Board will Alarm on Ignition Failures, Safety Lockouts and Repeated Limit Switch Trips.

Warranty

- One (1) Year Limited Warranty on the Complete Unit
- Five (5) Year Warranty - Compressors and Electric Heater Elements
- Fifteen (15) Year Limited Warranty - Stainless Steel Heat Exchanger

Predator 3-12.5 Ton Package

York Single Package R-410A Air Conditioner

Project Name: **Sysco Design Build** | Unit Model #: **ZT037S06R5B5BCA1E2**

Quantity: **1** Tag #: **RTU-5** | System: **ZT037S06R5B5BCA1E2**

Consolidated Drawing

NOTES:
1. FOR OUTDOOR USE ONLY.
2. WEIGHTS SHOWN ARE FOR COOLING ONLY UNITS.
3. MIN. CLEARANCES TO BE:
   RIGHT SIDE: 12 [305]
   LEFT SIDE: 36 [915]
   FRONT: 36 [915]
   REAR: 36 [915]
   TOP: 72 [1830]
   BOTTOM: 0 [0]
4. TO REMOVE THE SLIDE-OUT DRAIN PAIN, A REAR CLEARANCE OF 60 in (1525 mm) IS REQUIRED. IF SPACE IS UNAVAILABLE, THE DRAIN PAN CAN BE REMOVED THROUGH THE FRONT BY SEPARATING THE CORNER WALL.
5. FOR SMALLER SERVICE AND OPERATIONAL CLEARANCES CONTACT YOUR APPLICATION ENGINEERING DEPARTMENT.
6. DOWNFLOW DUCTS DESIGNED TO BE ATTACHED TO ACCESSORY ROOF CURB ONLY. IF UNIT IS MOUNTED SIDE SUPPLY, IT IS RECOMMENDED THAT THE DUCTS ARE SUPPORTED BY CROSS BRACES, AS DONE ON ACCESSORY ROOF CURBS.
7. SIDE DUCT FLANGES ARE 0.75" HIGH. BOTTOM DUCTS DO NOT HAVE FLANGES.
8. MINIMUM CONDENSATION TRAP HEIGHT SHALL BE 1.5 TIMES THE LOWEST NEGATIVE STATIC.
9. DIMENSIONS IN [ ] ARE IN MILLIMETERS OR KILOGRAMS.
10. OPTIONAL COIL GUARDS, POWER EXHAUST, GAS HEAT, ECONOMIZER, DISCONNECT SWITCH, CONVENIENCE OUTLET, AND BAROMETRIC RELIEF & FRESH AIR HOODS SHOWN.
11. DELETED
12. 8 TUBE HEAT EXCHANGER IS NOT AVAILABLE FOR 3 & 4 TON UNITS.

DIRECTION OF AIRFLOW

CENTER OF GRAVITY

TONNAGE	UNIT	OPERATING WEIGHT(LBS) (BASE UNIT)	CENTER OF GRAVITY LOCATION (BASE UNIT) X	Y	4 POINT CORNER LOADS (LBS) (BASE UNIT) A	B	C	D
6.5	ZF	860 [390]	38 [965]	24 [610]	200 [91]	149 [68]	218 [99]	292 [133]
7.5	ZF	880 [399]	38 [965]	24 [610]	205 [93]	153 [69]	223 [101]	299 [136]
5	ZH	864 [393]	40 [1016]	26 [660]	210 [95]	171 [78]	217 [99]	266 [121]
6.5 & 7.5	ZH	910 [413]	38 [965]	24 [610]	212 [96]	158 [72]	230 [104]	309 [140]
5	ZJ	770 [349]	40 [1016]	24 [610]	172 [78]	141 [64]	205 [93]	251 [114]
4	ZR	880 [399]	40 [1016]	26 [660]	214 [97]	174 [79]	221 [100]	271 [123]
5	ZR	868 [394]	40 [1016]	26 [660]	211 [96]	172 [78]	218 [99]	267 [121]
6.5	ZR	957 [435]	38 [965]	23 [584]	214 [97]	161 [73]	249 [113]	333 [151]
7.5	ZR	965 [438]	38 [965]	23 [584]	216 [98]	161 [73]	251 [114]	337 [153]
3	ZT	922 [418]	42.4 [1077]	24.7 [627]	202 [92]	184 [84]	255 [116]	281 [128]
4	ZT	960 [436]	42.5 [1080]	25.5 [648]	217 [98]	198 [90]	260 [118]	285 [129]
5	ZT	968 [439]	41.6 [1057]	25.5 [648]	223 [101]	196 [89]	257 [117]	293 [133]

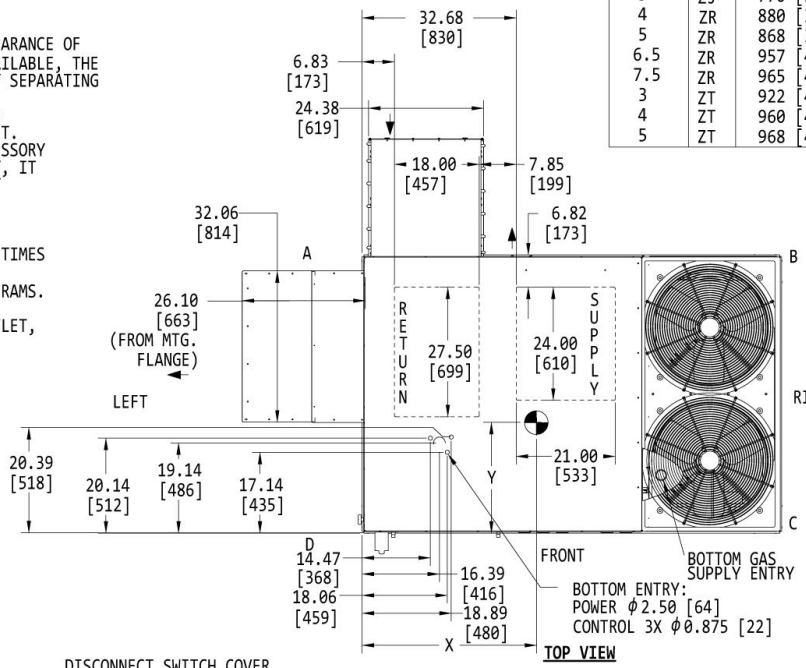

TOP VIEW

ZT/ZV

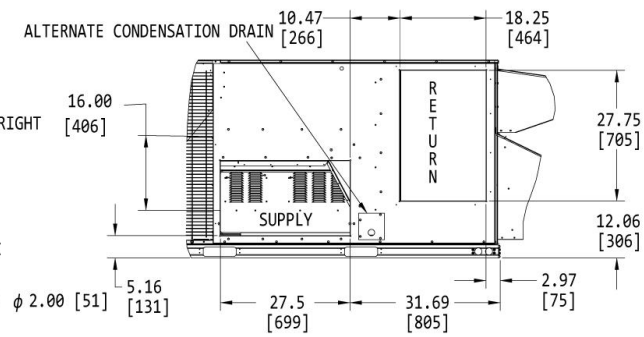

REAR (PARTIAL VIEW)
(INTAKE HOOD NOT SHOWN IN THIS VIEW)

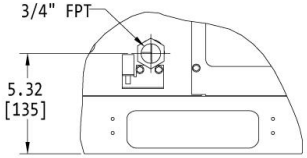

DETAIL A

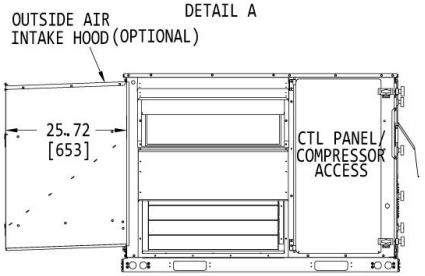

LEFT VIEW

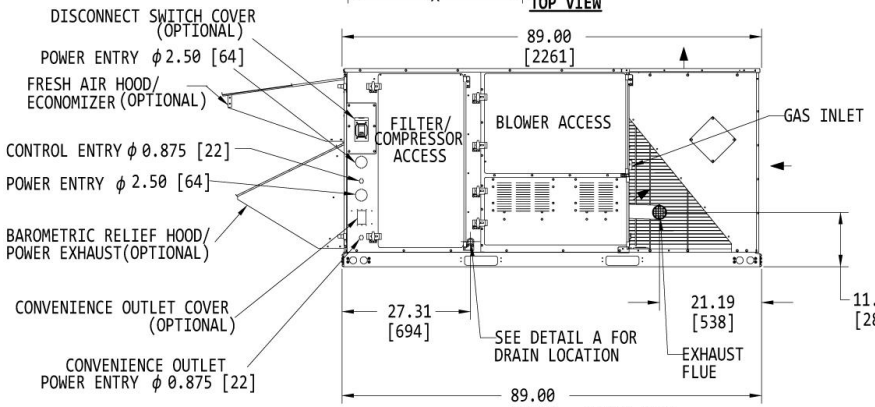

FRONT VIEW
(OPTIONAL FRONT COIL GUARD NOT SHOWN IN THIS VIEW)

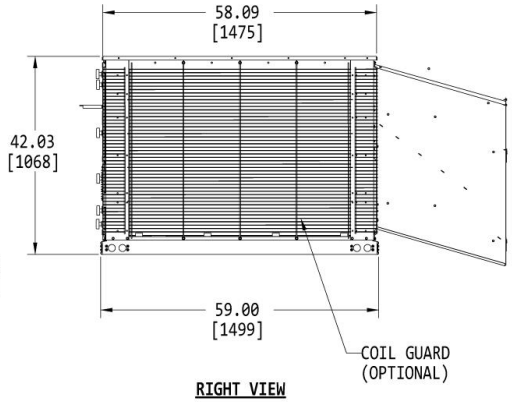

RIGHT VIEW

Predator 3-12.5 Ton Package

York Single Package R-410A Air Conditioner

w/Reheat

Project Name: **Sysco Design Build** | Unit Model #: **ZR078S12R5B5BCA1E1**

Quantity: **1** Tag #: **RTU-6** | System: **ZR078S12R5B5BCA1E1**

Cooling Performance		
Total gross capacity	84.7	MBH
Sensible gross capacity	62.3	MBH
Efficiency (at ARI)	11.20	EER
Integrated eff. (at ARI)	13.00	IEER
Ambient DB temp.	95.0	°F
Entering DB temp.	80.0	°F
Entering WB temp.	67.0	°F
Leaving DB temp.	60.0	°F
Leaving WB temp.	57.8	°F
Power input (w/o blower)	6.60	kW
Sound power	83	dB(A)

Refrigerant		
Refrigerant type	R-410A	
Sys1	9 lbs	
Sys2	5 lbs	8 oz

Reheat Performance		
Total capacity	35.7	MBH
Sensible capacity	7.6	MBH
Ambient DB temp.	85	°F
Entering DB temp.	75	°F
Entering WB temp.	67	°F
Leaving DB temp.	72.6	°F
Leaving WB temp.	63.4	°F
Power input (w/o blower)	5.81	kW
Gallons of water per hour	3.21	gal/hr

Gas Heating Performance		
Entering DB temp.	60	°F
Heating output capacity (Max)	96	MBH
Supply air	2885	CFM
Heating input capacity (Max)	120	MBH
Leaving DB temp.	60.0	°F
Stages	2	

Supply Air Blower Performance		
Supply air	2885	CFM
Ext. static pressure	0.82	IWG
Addl. Unit Losses (Options/Accessories)	0.18	IWG
Blower speed	1321	RPM
Max BHP of Motor (including service factor)	2.30	HP
Duct location	Bottom	
Motor rating	2.00	HP
Actual required BHP	2.08	HP
Power input	1.94	kW
Elevation	0	ft.
Drive type	BELT	
Requires field-supplied drive	true	

Outside/Mixed Air		
Outside Air Cfm	545	CFM

Electrical Data		
Power supply	575-3-60	
Unit min circuit ampacity	14.7	Amps
Unit max over-current protection	15	Amps

Dimensions & Weight						
Hgt	42	in.	Len	89	in.	Wth	59 in.
Weight with factory installed options							1152 lbs.

Clearances						
Right	12	in.	Front	36	in.	Back	36 in.
Top	72	in.	Bottom	0	in.	Left	36 in.

Note: Please refer to the tech guide for listed maximum static pressures

6.5 Ton

- York Predator units are manufactured at an ISO 9001 registered facility and each rooftop is completely computer-run tested prior to shipment.

Unit Features

- Two Stage Cooling
- 120 MBH Input Stainless Steel, Two Stage Gas Heat
- Unit Cabinet Constructed of Powder Painted Steel, Certified At 750 Hours Salt Spray Test (ASTM B-117 Standards)
- Full perimeter base rails with built in rigging capabilities
- Scroll Compressor[s]
- Dry Bulb Low Leak Economizer w/Barometric Relief and Hoods (Bottom or Horizontal End Return Only) with Economizer Fault Detection & Diagnostic (Meets ASHRAE 90.1-2013, IECC 2015, California Title 24, AMCA 511).
- 2 HP High Static Belt Drive Blower
- Solid Core Liquid Line Filter Driers
- Unit Ships with 2" Throwaway Filters
- Replacement Filters: 4 - (24" x 16"). Unit accepts 2" or 4" wide filters.
- Non-Powered Convenience Outlet
- HACR Circuit Breaker/Disconnect
- Short Circuit Current: 5kA RMS Symmetrical
- Single Point Power Connection
- Through-the-Curb and Through-the-Base Utility Connections
- Copper tube/aluminum fin condenser coil, Copper tube/aluminum fin evaporator coil
- Stainless Steel Drain Pan - Front Connection
- Tool-free maintenance with features like hinged doors for all-access panels, slide-out blower and blower motor tray

BAS Controller

- IntelliSpeed control of the VFD based on stages of cooling. Provides Single Zone VAV Fan Operation as defined by ASHRAE 90.1 section 6.4.3.10.

Standard Unit Controller: Smart Equipment Control Board

- Safety Monitoring - Monitors the High and Low-Pressure Switches, the Freezestats, the Gas Valve, if Applicable, and the Temperature Limit Switch on Gas and Electric Heat Units. The Unit Control Board will Alarm on Ignition Failures, Safety Lockouts and Repeated Limit Switch Trips.

Warranty

- One (1) Year Limited Warranty on the Complete Unit
- Five (5) Year Warranty - Compressors and Electric Heater Elements
- Fifteen (15) Year Limited Warranty - Stainless Steel Heat Exchanger

Predator 3-12.5 Ton Package

York Single Package R-410A Air Conditioner w/Reheat

Project Name: **Sysco Design Build** | Unit Model #: **ZR078S12R5B5BCA1E1**

Quantity: **1** Tag #: **RTU-6** | System: **ZR078S12R5B5BCA1E1**

Consolidated Drawing

NOTES:
1. FOR OUTDOOR USE ONLY.
2. WEIGHTS SHOWN ARE FOR COOLING ONLY UNITS.
3. MIN. CLEARANCES TO BE:
   RIGHT SIDE: 12 [305]
   LEFT SIDE: 36 [915]
   FRONT: 36 [915]
   REAR: 36 [915]
   TOP: 72 [1830]
   BOTTOM: 0 [0]
4. TO REMOVE THE SLIDE-OUT DRAIN PAIN, A REAR CLEARANCE OF 60 in (1525 mm) IS REQUIRED. IF SPACE IS UNAVAILABLE, THE DRAIN PAN CAN BE REMOVED THROUGH THE FRONT BY SEPARATING THE CORNER WALL.
5. FOR SMALLER SERVICE AND OPERATIONAL CLEARANCES CONTACT YOUR APPLICATION ENGINEERING DEPARTMENT.
6. DOWNFLOW DUCTS DESIGNED TO BE ATTACHED TO ACCESSORY ROOF CURB ONLY. IF UNIT IS MOUNTED SIDE SUPPLY, IT IS RECOMMENDED THAT THE DUCTS ARE SUPPORTED BY CROSS BRACES, AS DONE ON ACCESSORY ROOF CURBS.
7. SIDE DUCT FLANGES ARE 0.75" HIGH. BOTTOM DUCTS DO NOT HAVE FLANGES.
8. MINIMUM CONDENSATION TRAP HEIGHT SHALL BE 1.5 TIMES THE LOWEST NEGATIVE STATIC.
9. DIMENSIONS IN [ ] ARE IN MILLIMETERS OR KILOGRAMS.
10. OPTIONAL COIL GUARDS, POWER EXHAUST, GAS HEAT, ECONOMIZER, DISCONNECT SWITCH, CONVENIENCE OUTLET, AND BAROMETRIC RELIEF & FRESH AIR HOODS SHOWN.
11. DELETED
12. 8 TUBE HEAT EXCHANGER IS NOT AVAILABLE FOR 3 & 4 TON UNITS.

DIRECTION OF AIRFLOW

CENTER OF GRAVITY

TONNAGE	UNIT	OPERATING WEIGHT(LBS) (BASE UNIT)	CENTER OF GRAVITY LOCATION (BASE UNIT) X	Y	4 POINT CORNER LOADS (LBS) (BASE UNIT) A	B	C	D
6.5	ZF	860 [390]	38 [965]	24 [610]	200 [91]	149 [68]	218 [99]	292 [133]
7.5	ZF	880 [399]	38 [965]	24 [610]	205 [93]	153 [69]	223 [101]	299 [136]
5	ZH	864 [393]	40 [1016]	26 [660]	210 [95]	171 [78]	217 [99]	266 [121]
6.5 & 7.5	ZH	910 [413]	38 [965]	24 [610]	212 [96]	158 [72]	230 [104]	309 [140]
5	ZJ	770 [349]	40 [1016]	24 [610]	172 [78]	141 [64]	205 [93]	251 [114]
4	ZR	880 [399]	40 [1016]	26 [660]	214 [97]	174 [79]	221 [100]	271 [123]
5	ZR	868 [394]	40 [1016]	26 [660]	211 [96]	172 [78]	218 [99]	267 [121]
6.5	ZR	957 [435]	38 [965]	23 [584]	214 [97]	161 [73]	249 [113]	333 [151]
7.5	ZR	965 [438]	38 [965]	23 [584]	216 [98]	161 [73]	251 [114]	337 [153]
3	ZT	922 [418]	42.4 [1077]	24.7 [627]	202 [92]	184 [84]	255 [116]	281 [128]
4	ZT	960 [436]	42.5 [1080]	25.5 [648]	217 [98]	198 [90]	260 [118]	285 [129]
5	ZT	968 [439]	41.6 [1057]	25.5 [648]	223 [101]	196 [89]	257 [117]	293 [133]

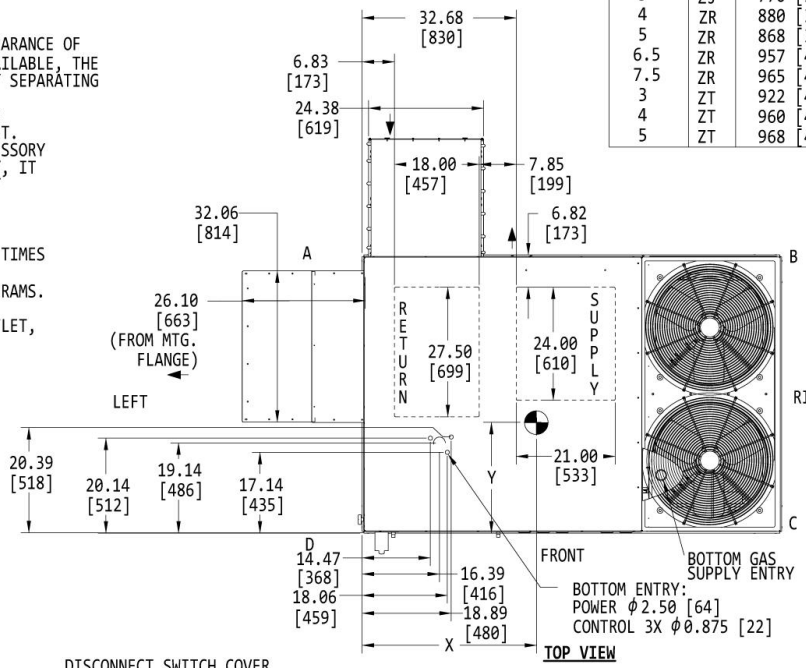

TOP VIEW

ZT/ZV

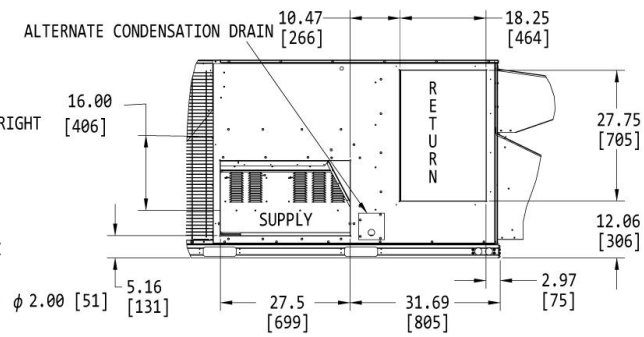

REAR (PARTIAL VIEW)
(INTAKE HOOD NOT SHOWN IN THIS VIEW)

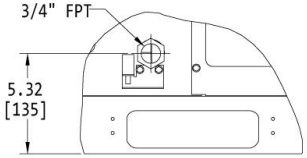

DETAIL A

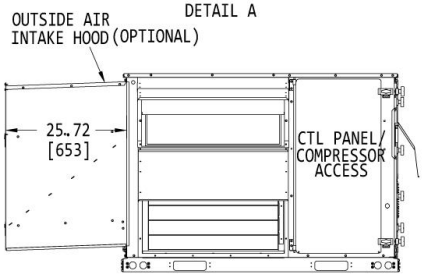

LEFT VIEW

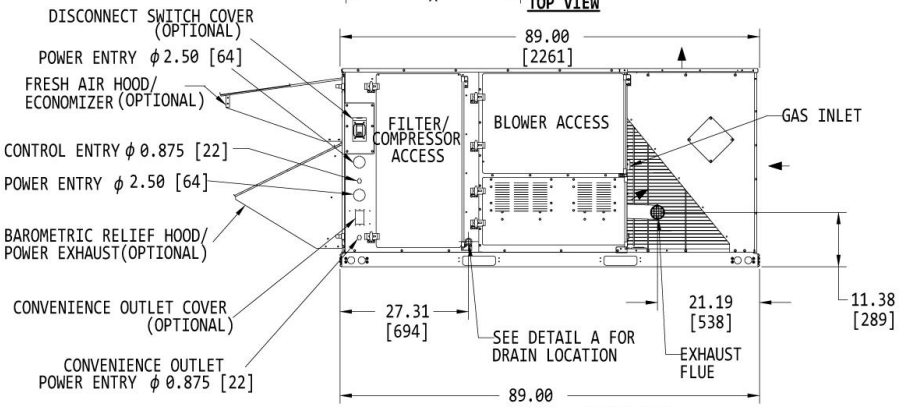

FRONT VIEW
(OPTIONAL FRONT COIL GUARD NOT SHOWN IN THIS VIEW)

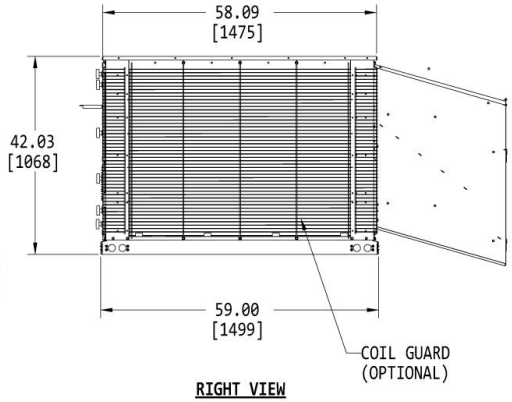

RIGHT VIEW

Predator 3-12.5 Ton Package

York Single Package R-410A Air Conditioner

w/Reheat

Project Name: **Sysco Design Build** | Unit Model #: **ZR037S06B5B5BCA1E2**

Quantity: **1** Tag #: **RTU-7** | System: **ZR037S06B5B5BCA1E2**

Cooling Performance		
Total gross capacity	30.5	MBH
Sensible gross capacity	22.7	MBH
Seasonal Efficiency (at ARI)	14.70	SEER
Efficiency (at ARI)	12.20	EER
Ambient DB temp.	95.0	°F
Entering DB temp.	80.0	°F
Entering WB temp.	67.0	°F
Leaving DB temp.	56.6	°F
Leaving WB temp.	56.2	°F
Power input (w/o blower)	3.10	kW
Sound power	77	dB(A)

Refrigerant		
Refrigerant type	R-410A	
Sys1	11 lbs	8 oz

Reheat Performance		
Total capacity	19.6	MBH
Sensible capacity	6.7	MBH
Ambient DB temp.	85	°F
Entering DB temp.	75	°F
Entering WB temp.	67	°F
Leaving DB temp.	68.1	°F
Leaving WB temp.	60.5	°F
Power input (w/o blower)	1.90	kW
Gallons of water per hour	1.47	gal/hr

Gas Heating Performance		
Entering DB temp.	60	°F
Heating output capacity (Max)	49	MBH
Supply air	900	CFM
Heating input capacity (Max)	60	MBH
Leaving DB temp.	110.4	°F
Air temp. rise	50.4	°F
SSE	81.5	%
Stages	2	

Supply Air Blower Performance		
Supply air	900	CFM
Ext. static pressure	1.0	IWG
Addl. Unit Losses (Options/Accessories)	-0.05	IWG
Blower speed	819	RPM
Max BHP of Motor (including service factor)	1.73	HP
Duct location	Bottom	
Motor rating	1.50	HP
Actual required BHP	.66	HP
Power input	0.62	kW
Elevation	0	ft.
Drive type	BELT	

Outside/Mixed Air		
Outside Air Cfm	220	CFM

Electrical Data		
Power supply	575-3-60	
Unit min circuit ampacity	7.5	Amps
Unit max over-current protection	15	Amps

Dimensions & Weight					
Hgt	42 in.	Len	89 in.	Wth	59 in.
Weight with factory installed options					1052 lbs.

Clearances					
Right	12 in.	Front	36 in.	Back	36 in.
Top	72 in.	Bottom	0 in.	Left	36 in.

Note: Please refer to the tech guide for listed maximum static pressures

3 Ton

- York Predator units are manufactured at an ISO 9001 registered facility and each rooftop is completely computer-run tested prior to shipment.

Unit Features

- 60 MBH Input Stainless Steel, Two Stage Gas Heat
- Full perimeter base rails with built in rigging capabilities
- Unit Cabinet Constructed of Powder Painted Steel, Certified At 750 Hours Salt Spray Test (ASTM B-117 Standards)
- Scroll Compressor[s]
- Dry Bulb Low Leak Economizer w/Barometric Relief and Hoods (Bottom or Horizontal End Return Only) with Economizer Fault Detection & Diagnostic (Meets ASHRAE 90.1-2013, IECC 2015, California Title 24, AMCA 511).
- Slide-Out Blower/1.5 HP Belt Drive Motor Assembly
- Solid Core Liquid Line Filter Driers
- Unit Ships with 2" Throwaway Filters
- Replacement Filters: 4 - (24" x 16"). Unit accepts 2" or 4" wide filters.
- Non-Powered Convenience Outlet
- HACR Circuit Breaker/Disconnect
- Short Circuit Current: 5kA RMS Symmetrical
- Single Point Power Connection
- Through-the-Curb and Through-the-Base Utility Connections
- Micro-Channel "all-aluminum" condenser coil, Copper tube/aluminum fin evaporator coil
- Stainless Steel Drain Pan - Front Connection
- Tool-free maintenance with features like hinged doors for all-access panels, slide-out blower and blower motor tray

Standard Unit Controller: Smart Equipment Control Board

- Safety Monitoring - Monitors the High and Low-Pressure Switches, the Freezestats, the Gas Valve, if Applicable, and the Temperature Limit Switch on Gas and Electric Heat Units. The Unit Control Board will Alarm on Ignition Failures, Safety Lockouts and Repeated Limit Switch Trips.

Warranty

- One (1) Year Limited Warranty on the Complete Unit
- Five (5) Year Warranty - Compressors and Electric Heater Elements
- Fifteen (15) Year Limited Warranty - Stainless Steel Heat Exchanger

Predator 3-12.5 Ton Package

York Single Package R-410A Air Conditioner w/Reheat

Project Name: **Sysco Design Build** | Unit Model #: **ZR037S06B5B5BCA1E2**

Quantity: **1** Tag #: **RTU-7** | System: **ZR037S06B5B5BCA1E2**

Consolidated Drawing

NOTES:
1. FOR OUTDOOR USE ONLY.
2. WEIGHTS SHOWN ARE FOR COOLING ONLY UNITS.
3. MIN. CLEARANCES TO BE:
   - RIGHT SIDE: 12 [305]
   - LEFT SIDE: 36 [915]
   - FRONT: 36 [915]
   - REAR: 36 [915]
   - TOP: 72 [1830]
   - BOTTOM: 0 [0]
4. TO REMOVE THE SLIDE-OUT DRAIN PAIN, A REAR CLEARANCE OF 60 in (1525 mm) IS REQUIRED. IF SPACE IS UNAVAILABLE, THE DRAIN PAN CAN BE REMOVED THROUGH THE FRONT BY SEPARATING THE CORNER WALL.
5. FOR SMALLER SERVICE AND OPERATIONAL CLEARANCES CONTACT YOUR APPLICATION ENGINEERING DEPARTMENT.
6. DOWNFLOW DUCTS DESIGNED TO BE ATTACHED TO ACCESSORY ROOF CURB ONLY. IF UNIT IS MOUNTED SIDE SUPPLY, IT IS RECOMMENDED THAT THE DUCTS ARE SUPPORTED BY CROSS BRACES, AS DONE ON ACCESSORY ROOF CURBS.
7. SIDE DUCT FLANGES ARE 0.75" HIGH. BOTTOM DUCTS DO NOT HAVE FLANGES.
8. MINIMUM CONDENSATION TRAP HEIGHT SHALL BE 1.5 TIMES THE LOWEST NEGATIVE STATIC.
9. DIMENSIONS IN [ ] ARE IN MILLIMETERS OR KILOGRAMS.
10. OPTIONAL COIL GUARDS, POWER EXHAUST, GAS HEAT, ECONOMIZER, DISCONNECT SWITCH, CONVENIENCE OUTLET, AND BAROMETRIC RELIEF & FRESH AIR HOODS SHOWN.
11. 8 TUBE HEAT EXCHANGER IS NOT AVAILABLE FOR 3 & 4 TON UNITS.

DIRECTION OF AIRFLOW

CENTER OF GRAVITY

TONNAGE	UNIT	OPERATING WEIGHT (LBS) (BASE UNIT)	CENTER OF GRAVITY LOCATION (BASE UNIT)		4 POINT CORNER LOADS (LBS) (BASE UNIT)			
			X	Y	A	B	C	D
3	ZH	723 [328]	40 [1016]	26 [660]	175 [79]	143 [65]	182 [83]	223 [101]
4	ZH	763 [346]	40 [1016]	26 [660]	185 [84]	151 [69]	192 [87]	235 [107]
3	ZJ	740 [336]	40 [1016]	26 [660]	180 [82]	147 [67]	186 [84]	228 [103]
4	ZJ	775 [352]	40 [1016]	26 [660]	174 [79]	142 [65]	207 [94]	253 [115]
3	ZR	867 [393]	39 [991]	24 [610]	215 [98]	167 [76]	212 [96]	272 [123]

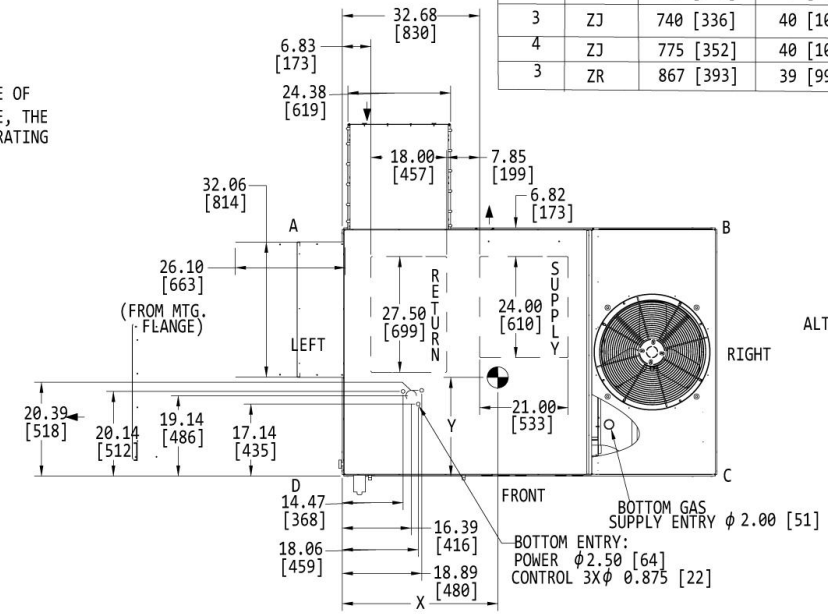

TOP VIEW

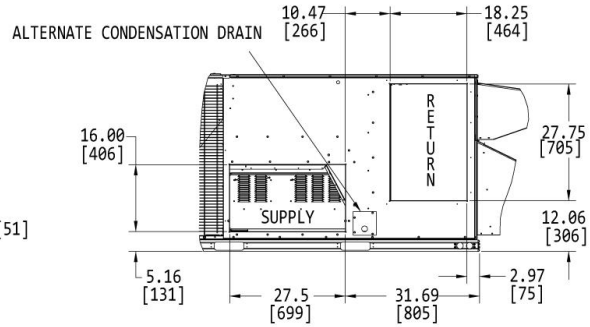

REAR (PARTIAL VIEW)
(INTAKE HOOD NOT SHOWN IN THIS VIEW)

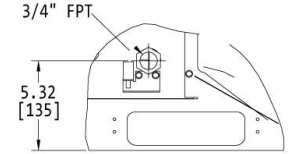

DETAIL A

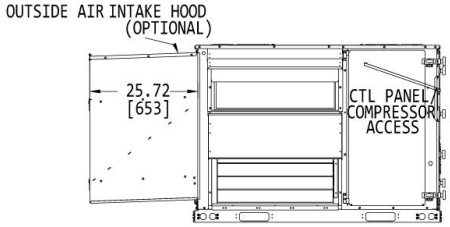

LEFT VIEW

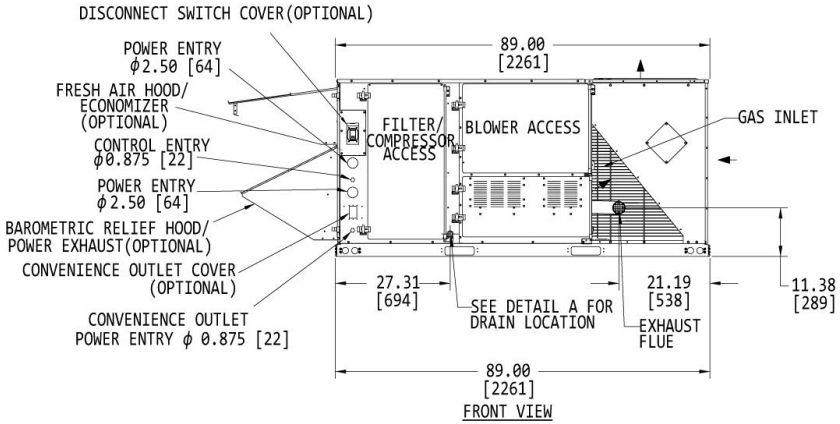

FRONT VIEW
(OPTIONAL FRONT COIL GUARD NOT SHOWN IN THIS VIEW)

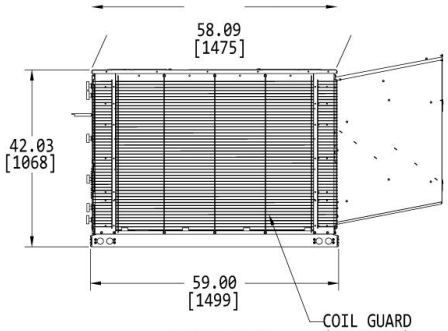

RIGHT VIEW

Predator 3-12.5 Ton Package

York Single Package R-410A Air Conditioner

w/Reheat

Project Name: **Sysco Design Build** | Unit Model #: **ZR037S06B5B5BCA1E2**

Quantity: **1** Tag #: **RTU-8** | System: **ZR037S06B5B5BCA1E2**

Cooling Performance		
Total gross capacity	30.5	MBH
Sensible gross capacity	22.7	MBH
Seasonal Efficiency (at ARI)	14.70	SEER
Efficiency (at ARI)	12.20	EER
Ambient DB temp.	95.0	°F
Entering DB temp.	80.0	°F
Entering WB temp.	67.0	°F
Leaving DB temp.	56.6	°F
Leaving WB temp.	56.2	°F
Power input (w/o blower)	3.10	kW
Sound power	77	dB(A)

Refrigerant		
Refrigerant type	R-410A	
Sys1	11 lbs	8 oz

Reheat Performance		
Total capacity	19.6	MBH
Sensible capacity	6.7	MBH
Ambient DB temp.	85	°F
Entering DB temp.	75	°F
Entering WB temp.	67	°F
Leaving DB temp.	68.1	°F
Leaving WB temp.	60.5	°F
Power input (w/o blower)	1.90	kW
Gallons of water per hour	1.47	gal/hr

Gas Heating Performance		
Entering DB temp.	60	°F
Heating output capacity (Max)	49	MBH
Supply air	900	CFM
Heating input capacity (Max)	60	MBH
Leaving DB temp.	110.4	°F
Air temp. rise	50.4	°F
SSE	81.5	%
Stages	2	

Supply Air Blower Performance		
Supply air	900	CFM
Ext. static pressure	1.0	IWG
Addl. Unit Losses (Options/Accessories)	-0.05	IWG
Blower speed	819	RPM
Max BHP of Motor (including service factor)	1.73	HP
Duct location	Bottom	
Motor rating	1.50	HP
Actual required BHP	.66	HP
Power input	0.62	kW
Elevation	0	ft.
Drive type	BELT	

Outside/Mixed Air		
Outside Air Cfm	70	CFM

Electrical Data		
Power supply	575-3-60	
Unit min circuit ampacity	7.5	Amps
Unit max over-current protection	15	Amps

Dimensions & Weight					
Hgt	42 in.	Len	89 in.	Wth	59 in.
Weight with factory installed options					1052 lbs.

Clearances					
Right	12 in.	Front	36 in.	Back	36 in.
Top	72 in.	Bottom	0 in.	Left	36 in.

Note: Please refer to the tech guide for listed maximum static pressures

3 Ton

- York Predator units are manufactured at an ISO 9001 registered facility and each rooftop is completely computer-run tested prior to shipment.

Unit Features

- 60 MBH Input Stainless Steel, Two Stage Gas Heat
- Full perimeter base rails with built in rigging capabilities
- Unit Cabinet Constructed of Powder Painted Steel, Certified At 750 Hours Salt Spray Test (ASTM B-117 Standards)
- Scroll Compressor[s]
- Dry Bulb Low Leak Economizer w/Barometric Relief and Hoods (Bottom or Horizontal End Return Only) with Economizer Fault Detection & Diagnostic (Meets ASHRAE 90.1-2013, IECC 2015, California Title 24, AMCA 511).
- Slide-Out Blower/1.5 HP Belt Drive Motor Assembly
- Solid Core Liquid Line Filter Driers
- Unit Ships with 2" Throwaway Filters
- Replacement Filters: 4 - (24" x 16"). Unit accepts 2" or 4" wide filters.
- Non-Powered Convenience Outlet
- HACR Circuit Breaker/Disconnect
- Short Circuit Current: 5kA RMS Symmetrical
- Single Point Power Connection
- Through-the-Curb and Through-the-Base Utility Connections
- Micro-Channel "all-aluminum" condenser coil, Copper tube/aluminum fin evaporator coil
- Stainless Steel Drain Pan - Front Connection
- Tool-free maintenance with features like hinged doors for all-access panels, slide-out blower and blower motor tray

Standard Unit Controller: Smart Equipment Control Board

- Safety Monitoring - Monitors the High and Low-Pressure Switches, the Freezestats, the Gas Valve, if Applicable, and the Temperature Limit Switch on Gas and Electric Heat Units. The Unit Control Board will Alarm on Ignition Failures, Safety Lockouts and Repeated Limit Switch Trips.

Warranty

- One (1) Year Limited Warranty on the Complete Unit
- Five (5) Year Warranty - Compressors and Electric Heater Elements
- Fifteen (15) Year Limited Warranty - Stainless Steel Heat Exchanger

Predator 3-12.5 Ton Package

York Single Package R-410A Air Conditioner w/Reheat

Project Name: **Sysco Design Build** | Unit Model #: **ZR037S06B5B5BCA1E2**

Quantity: **1** Tag #: **RTU-8** | System: **ZR037S06B5B5BCA1E2**

Consolidated Drawing

NOTES:
1. FOR OUTDOOR USE ONLY.
2. WEIGHTS SHOWN ARE FOR COOLING ONLY UNITS.
3. MIN. CLEARANCES TO BE:
   - RIGHT SIDE: 12 [305]
   - LEFT SIDE: 36 [915]
   - FRONT: 36 [915]
   - REAR: 36 [915]
   - TOP: 72 [1830]
   - BOTTOM: 0 [0]
4. TO REMOVE THE SLIDE-OUT DRAIN PAIN, A REAR CLEARANCE OF 60 in (1525 mm) IS REQUIRED. IF SPACE IS UNAVAILABLE, THE DRAIN PAN CAN BE REMOVED THROUGH THE FRONT BY SEPARATING THE CORNER WALL.
5. FOR SMALLER SERVICE AND OPERATIONAL CLEARANCES CONTACT YOUR APPLICATION ENGINEERING DEPARTMENT.
6. DOWNFLOW DUCTS DESIGNED TO BE ATTACHED TO ACCESSORY ROOF CURB ONLY. IF UNIT IS MOUNTED SIDE SUPPLY, IT IS RECOMMENDED THAT THE DUCTS ARE SUPPORTED BY CROSS BRACES, AS DONE ON ACCESSORY ROOF CURBS.
7. SIDE DUCT FLANGES ARE 0.75" HIGH. BOTTOM DUCTS DO NOT HAVE FLANGES.
8. MINIMUM CONDENSATION TRAP HEIGHT SHALL BE 1.5 TIMES THE LOWEST NEGATIVE STATIC.
9. DIMENSIONS IN [ ] ARE IN MILLIMETERS OR KILOGRAMS.
10. OPTIONAL COIL GUARDS, POWER EXHAUST, GAS HEAT, ECONOMIZER, DISCONNECT SWITCH, CONVENIENCE OUTLET, AND BAROMETRIC RELIEF & FRESH AIR HOODS SHOWN.
11. 8 TUBE HEAT EXCHANGER IS NOT AVAILABLE FOR 3 & 4 TON UNITS.

DIRECTION OF AIRFLOW

CENTER OF GRAVITY

TONNAGE	UNIT	OPERATING WEIGHT (LBS) (BASE UNIT)	CENTER OF GRAVITY LOCATION (BASE UNIT)		4 POINT CORNER LOADS (LBS) (BASE UNIT)			
			X	Y	A	B	C	D
3	ZH	723 [328]	40 [1016]	26 [660]	175 [79]	143 [65]	182 [83]	223 [101]
4	ZH	763 [346]	40 [1016]	26 [660]	185 [84]	151 [69]	192 [87]	235 [107]
3	ZJ	740 [336]	40 [1016]	26 [660]	180 [82]	147 [67]	186 [84]	228 [103]
4	ZJ	775 [352]	40 [1016]	26 [660]	174 [79]	142 [65]	207 [94]	253 [115]
3	ZR	867 [393]	39 [991]	24 [610]	215 [98]	167 [76]	212 [96]	272 [123]

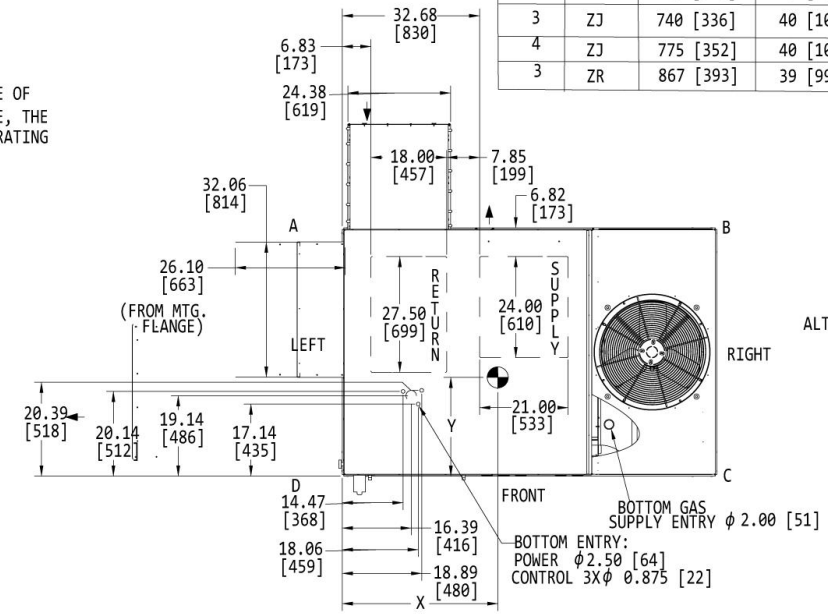

TOP VIEW

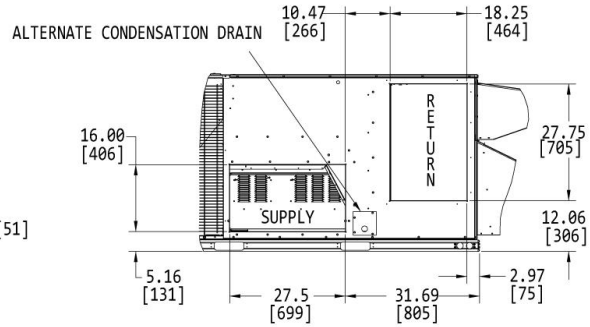

REAR (PARTIAL VIEW)
(INTAKE HOOD NOT SHOWN IN THIS VIEW)

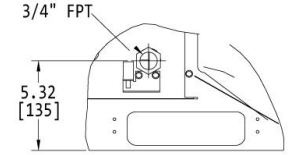

DETAIL A

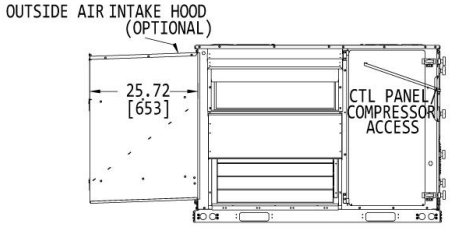

LEFT VIEW

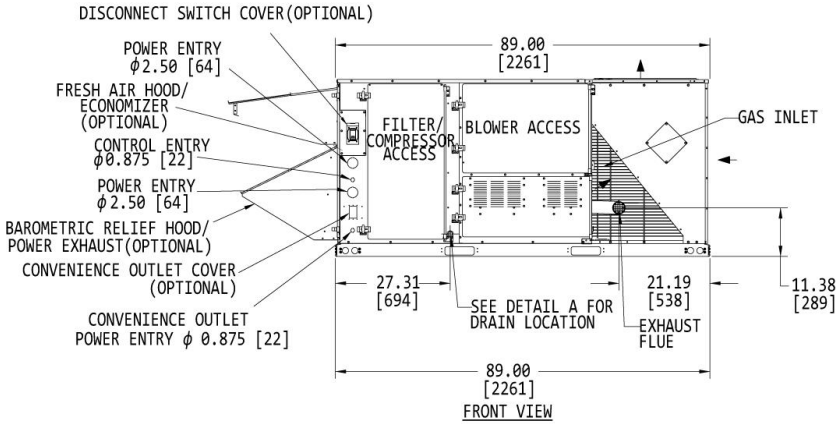

FRONT VIEW
(OPTIONAL FRONT COIL GUARD NOT SHOWN IN THIS VIEW)

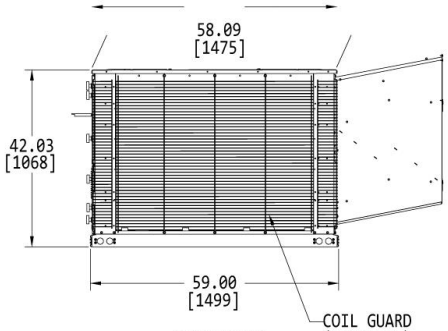

RIGHT VIEW

Predator 3-12.5 Ton Package

York Single Package R-410A Air Conditioner

Project Name: **Sysco Design Build** | Unit Model #: **ZT049S08R5B5BCA1E1**

Quantity: **1** Tag #: **RTU-9** | System: **ZT049S08R5B5BCA1E1**

Cooling Performance		
Total gross capacity	52.4	MBH
Sensible gross capacity	37.7	MBH
Seasonal Efficiency (at ARI)	17.50	SEER
Efficiency (at ARI)	14.00	EER
Ambient DB temp.	95.0	°F
Entering DB temp.	80.0	°F
Entering WB temp.	67.0	°F
Leaving DB temp.	58.2	°F
Leaving WB temp.	56.6	°F
Power input (w/o blower)	3.15	kW
Sound power	75	dB(A)

Refrigerant		
Refrigerant type	R-410A	
Sys1	13 lbs	2 oz

Gas Heating Performance		
Entering DB temp.	60	°F
Heating output capacity (Max)	65	MBH
Supply air	1600	CFM
Heating input capacity (Max)	80	MBH
Leaving DB temp.	97.6	°F
Air temp. rise	37.6	°F
SSE	81.0	%
Stages	2	

Supply Air Blower Performance		
Supply air	1600	CFM
Ext. static pressure	1.0	IWG
Addl. Unit Losses (Options/Accessories)	0.14	IWG
Blower speed	1016	RPM
Max BHP of Motor (including service factor)	1.73	HP
Duct location	Bottom	
Motor rating	1.50	HP
Actual required BHP	.89	HP
Power input	0.83	kW
Elevation	0	ft.
Drive type	BELT	

Outside/Mixed Air		
Outside Air Cfm	530	CFM

Electrical Data		
Power supply	575-3-60	
Unit min circuit ampacity	10.6	Amps
Unit max over-current protection	15	Amps

Dimensions & Weight						
Hgt	42	in.	Len	89	in.	Wth	59	in.
Weight with factory installed options							1145	lbs.

Clearances								
Right	12	in.	Front	36	in.	Back	36	in.
Top	72	in.	Bottom	0	in.	Left	36	in.

Note: Please refer to the tech guide for listed maximum static pressures

4 Ton

- York Predator units are manufactured at an ISO 9001 registered facility and each rooftop is completely computer-run tested prior to shipment.

Unit Features

- Two Stage Cooling
- 80 MBH Input Stainless Steel, Two Stage Gas Heat
- Unit Cabinet Constructed of Powder Painted Steel, Certified At 750 Hours Salt Spray Test (ASTM B-117 Standards)
- Full perimeter base rails with built in rigging capabilities
- Scroll Compressor[s]
- Dry Bulb Low Leak Economizer w/Barometric Relief and Hoods (Bottom or Horizontal End Return Only) with Economizer Fault Detection & Diagnostic (Meets ASHRAE 90.1-2013, IECC 2015, California Title 24, AMCA 511).
- VFD Standard
- Slide-Out Blower/1.5 HP Belt Drive Motor Assembly
- Solid Core Liquid Line Filter Driers
- Unit Ships with 2" Throwaway Filters
- Replacement Filters: 4 - (24" x 16"). Unit accepts 2" or 4" wide filters.
- Non-Powered Convenience Outlet
- HACR Circuit Breaker/Disconnect
- Short Circuit Current: 5kA RMS Symmetrical
- Single Point Power Connection
- Through-the-Curb and Through-the-Base Utility Connections
- Micro-Channel "all-aluminum" condenser coil, Copper tube/aluminum fin evaporator coil
- Stainless Steel Drain Pan - Front Connection
- Tool-free maintenance with features like hinged doors for all-access panels, slide-out blower and blower motor tray

BAS Controller

- IntelliSpeed control of the VFD based on stages of cooling. Provides Single Zone VAV Fan Operation as defined by ASHRAE 90.1 section 6.4.3.10.

Standard Unit Controller: Smart Equipment Control Board

- Safety Monitoring - Monitors the High and Low-Pressure Switches, the Freezestats, the Gas Valve, if Applicable, and the Temperature Limit Switch on Gas and Electric Heat Units. The Unit Control Board will Alarm on Ignition Failures, Safety Lockouts and Repeated Limit Switch Trips.

Warranty

- One (1) Year Limited Warranty on the Complete Unit
- Five (5) Year Warranty - Compressors and Electric Heater Elements
- Fifteen (15) Year Limited Warranty - Stainless Steel Heat Exchanger

Predator 3-12.5 Ton Package

York Single Package R-410A Air Conditioner

Project Name: **Sysco Design Build** | Unit Model #: **ZT049S08R5B5BCA1E1**

Quantity: **1** Tag #: **RTU-9** | System: **ZT049S08R5B5BCA1E1**

Consolidated Drawing

NOTES:
1. FOR OUTDOOR USE ONLY.
2. WEIGHTS SHOWN ARE FOR COOLING ONLY UNITS.
3. MIN. CLEARANCES TO BE:
   RIGHT SIDE: 12 [305]
   LEFT SIDE: 36 [915]
   FRONT: 36 [915]
   REAR: 36 [915]
   TOP: 72 [1830]
   BOTTOM: 0 [0]
4. TO REMOVE THE SLIDE-OUT DRAIN PAIN, A REAR CLEARANCE OF 60 in (1525 mm) IS REQUIRED. IF SPACE IS UNAVAILABLE, THE DRAIN PAN CAN BE REMOVED THROUGH THE FRONT BY SEPARATING THE CORNER WALL.
5. FOR SMALLER SERVICE AND OPERATIONAL CLEARANCES CONTACT YOUR APPLICATION ENGINEERING DEPARTMENT.
6. DOWNFLOW DUCTS DESIGNED TO BE ATTACHED TO ACCESSORY ROOF CURB ONLY. IF UNIT IS MOUNTED SIDE SUPPLY, IT IS RECOMMENDED THAT THE DUCTS ARE SUPPORTED BY CROSS BRACES, AS DONE ON ACCESSORY ROOF CURBS.
7. SIDE DUCT FLANGES ARE 0.75" HIGH. BOTTOM DUCTS DO NOT HAVE FLANGES.
8. MINIMUM CONDENSATION TRAP HEIGHT SHALL BE 1.5 TIMES THE LOWEST NEGATIVE STATIC.
9. DIMENSIONS IN [ ] ARE IN MILLIMETERS OR KILOGRAMS.
10. OPTIONAL COIL GUARDS, POWER EXHAUST, GAS HEAT, ECONOMIZER, DISCONNECT SWITCH, CONVENIENCE OUTLET, AND BAROMETRIC RELIEF & FRESH AIR HOODS SHOWN.
11. DELETED
12. 8 TUBE HEAT EXCHANGER IS NOT AVAILABLE FOR 3 & 4 TON UNITS.

DIRECTION OF AIRFLOW

CENTER OF GRAVITY

TONNAGE	UNIT	OPERATING WEIGHT(LBS) (BASE UNIT)	CENTER OF GRAVITY LOCATION (BASE UNIT) X	Y	4 POINT CORNER LOADS (LBS) (BASE UNIT) A	B	C	D
6.5	ZF	860 [390]	38 [965]	24 [610]	200 [91]	149 [68]	218 [99]	292 [133]
7.5	ZF	880 [399]	38 [965]	24 [610]	205 [93]	153 [69]	223 [101]	299 [136]
5	ZH	864 [393]	40 [1016]	26 [660]	210 [95]	171 [78]	217 [99]	266 [121]
6.5 & 7.5	ZH	910 [413]	38 [965]	24 [610]	212 [96]	158 [72]	230 [104]	309 [140]
5	ZJ	770 [349]	40 [1016]	24 [610]	172 [78]	141 [64]	205 [93]	251 [114]
4	ZR	880 [399]	40 [1016]	26 [660]	214 [97]	174 [79]	221 [100]	271 [123]
5	ZR	868 [394]	40 [1016]	26 [660]	211 [96]	172 [78]	218 [99]	267 [121]
6.5	ZR	957 [435]	38 [965]	23 [584]	214 [97]	161 [73]	249 [113]	333 [151]
7.5	ZR	965 [438]	38 [965]	23 [584]	216 [98]	161 [73]	251 [114]	337 [153]
3	ZT	922 [418]	42.4 [1077]	24.7 [627]	202 [92]	184 [84]	255 [116]	281 [128]
4	ZT	960 [436]	42.5 [1080]	25.5 [648]	217 [98]	198 [90]	260 [118]	285 [129]
5	ZT	968 [439]	41.6 [1057]	25.5 [648]	223 [101]	196 [89]	257 [117]	293 [133]

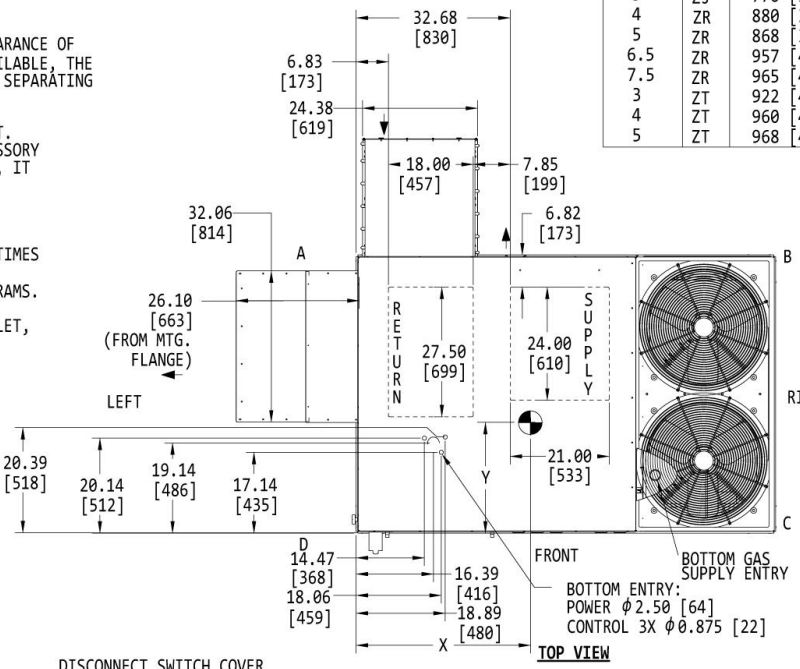

TOP VIEW

ZT/ZV

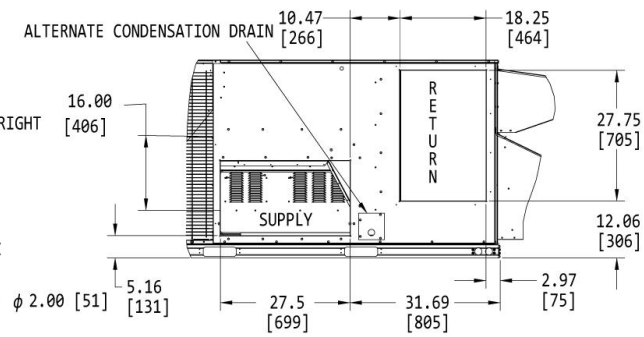

REAR (PARTIAL VIEW)
(INTAKE HOOD NOT SHOWN IN THIS VIEW)

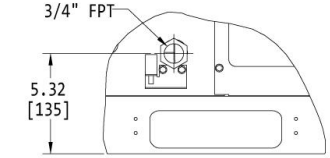

DETAIL A

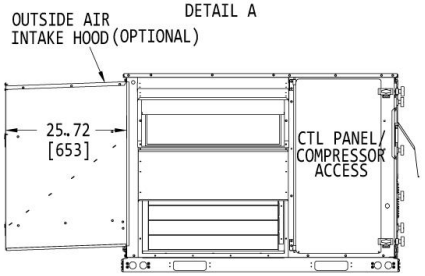

LEFT VIEW

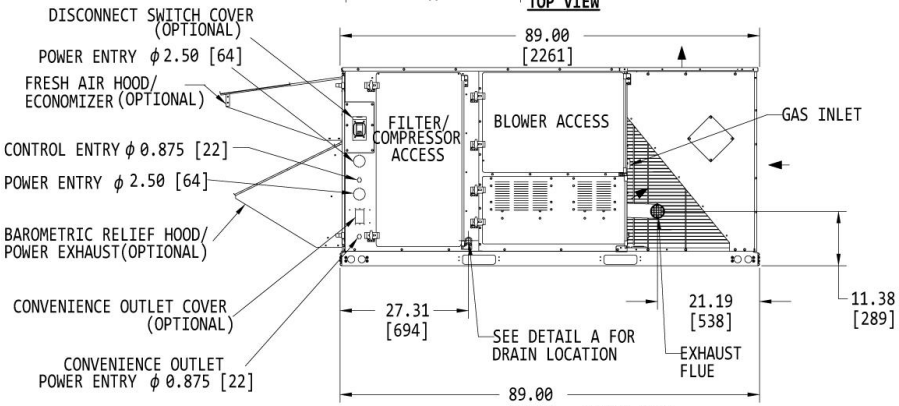

FRONT VIEW
(OPTIONAL FRONT COIL GUARD NOT SHOWN IN THIS VIEW)

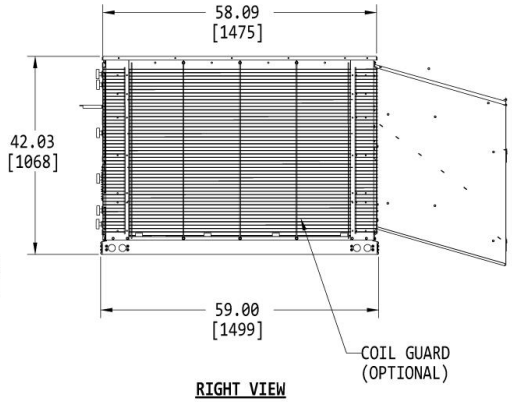

RIGHT VIEW

Predator 3-12.5 Ton Package

York Single Package R-410A Air Conditioner

w/Reheat

Project Name: **Sysco Design Build** | Unit Model #: **ZR037S06B5B5BCA1E2**

Quantity: **1** Tag #: **RTU-10** | System: **ZR037S06B5B5BCA1E2**

Cooling Performance		
Total gross capacity	30.5	MBH
Sensible gross capacity	22.7	MBH
Seasonal Efficiency (at ARI)	14.70	SEER
Efficiency (at ARI)	12.20	EER
Ambient DB temp.	95.0	°F
Entering DB temp.	80.0	°F
Entering WB temp.	67.0	°F
Leaving DB temp.	56.6	°F
Leaving WB temp.	56.2	°F
Power input (w/o blower)	3.10	kW
Sound power	77	dB(A)

Refrigerant		
Refrigerant type	R-410A	
Sys1	11 lbs	8 oz

Reheat Performance		
Total capacity	19.6	MBH
Sensible capacity	6.7	MBH
Ambient DB temp.	85	°F
Entering DB temp.	75	°F
Entering WB temp.	67	°F
Leaving DB temp.	68.1	°F
Leaving WB temp.	60.5	°F
Power input (w/o blower)	1.90	kW
Gallons of water per hour	1.47	gal/hr

Gas Heating Performance		
Entering DB temp.	60	°F
Heating output capacity (Max)	49	MBH
Supply air	900	CFM
Heating input capacity (Max)	60	MBH
Leaving DB temp.	110.4	°F
Air temp. rise	50.4	°F
SSE	81.5	%
Stages	2	

Supply Air Blower Performance		
Supply air	900	CFM
Ext. static pressure	1.0	IWG
Addl. Unit Losses (Options/Accessories)	-0.05	IWG
Blower speed	819	RPM
Max BHP of Motor (including service factor)	1.73	HP
Duct location	Bottom	
Motor rating	1.50	HP
Actual required BHP	.66	HP
Power input	0.62	kW
Elevation	0	ft.
Drive type	BELT	

Outside/Mixed Air		
Outside Air Cfm	85	CFM

Electrical Data		
Power supply	575-3-60	
Unit min circuit ampacity	7.5	Amps
Unit max over current protection	15	Amps

Dimensions & Weight					
Hgt	42 in.	Len	89 in.	Wth	59 in.
Weight with factory installed options					1052 lbs.

Clearances					
Right	12 in.	Front	36 in.	Back	36 in.
Top	72 in.	Bottom	0 in.	Left	36 in.

Note: Please refer to the tech guide for listed maximum static pressures

3 Ton

- York Predator units are manufactured at an ISO 9001 registered facility and each rooftop is completely computer-run tested prior to shipment.

Unit Features

- 60 MBH Input Stainless Steel, Two Stage Gas Heat
- Full perimeter base rails with built in rigging capabilities
- Unit Cabinet Constructed of Powder Painted Steel, Certified At 750 Hours Salt Spray Test (ASTM B-117 Standards)
- Scroll Compressor[s]
- Dry Bulb Low Leak Economizer w/Barometric Relief and Hoods (Bottom or Horizontal End Return Only) with Economizer Fault Detection & Diagnostic (Meets ASHRAE 90.1-2013, IECC 2015, California Title 24, AMCA 511).
- Slide-Out Blower/1.5 HP Belt Drive Motor Assembly
- Solid Core Liquid Line Filter Driers
- Unit Ships with 2" Throwaway Filters
- Replacement Filters: 4 - (24" x 16"). Unit accepts 2" or 4" wide filters.
- Non-Powered Convenience Outlet
- HACR Circuit Breaker/Disconnect
- Short Circuit Current: 5kA RMS Symmetrical
- Single Point Power Connection
- Through-the-Curb and Through-the-Base Utility Connections
- Micro-Channel "all-aluminum" condenser coil, Copper tube/aluminum fin evaporator coil
- Stainless Steel Drain Pan - Front Connection
- Tool-free maintenance with features like hinged doors for all-access panels, slide-out blower and blower motor tray

Standard Unit Controller: Smart Equipment Control Board

- Safety Monitoring - Monitors the High and Low-Pressure Switches, the Freezestats, the Gas Valve, if Applicable, and the Temperature Limit Switch on Gas and Electric Heat Units. The Unit Control Board will Alarm on Ignition Failures, Safety Lockouts and Repeated Limit Switch Trips.

Warranty

- One (1) Year Limited Warranty on the Complete Unit
- Five (5) Year Warranty - Compressors and Electric Heater Elements
- Fifteen (15) Year Limited Warranty - Stainless Steel Heat Exchanger

Predator 3-12.5 Ton Package

York Single Package R-410A Air Conditioner w/Reheat

Project Name: **Sysco Design Build** | Unit Model #: **ZR037S06B5B5BCA1E2**

Quantity: **1** Tag #: **RTU-10** | System: **ZR037S06B5B5BCA1E2**

Consolidated Drawing

NOTES:
1. FOR OUTDOOR USE ONLY.
2. WEIGHTS SHOWN ARE FOR COOLING ONLY UNITS.
3. MIN. CLEARANCES TO BE:
   - RIGHT SIDE: 12 [305]
   - LEFT SIDE: 36 [915]
   - FRONT: 36 [915]
   - REAR: 36 [915]
   - TOP: 72 [1830]
   - BOTTOM: 0 [0]
4. TO REMOVE THE SLIDE-OUT DRAIN PAIN, A REAR CLEARANCE OF 60 in (1525 mm) IS REQUIRED. IF SPACE IS UNAVAILABLE, THE DRAIN PAN CAN BE REMOVED THROUGH THE FRONT BY SEPARATING THE CORNER WALL.
5. FOR SMALLER SERVICE AND OPERATIONAL CLEARANCES CONTACT YOUR APPLICATION ENGINEERING DEPARTMENT.
6. DOWNFLOW DUCTS DESIGNED TO BE ATTACHED TO ACCESSORY ROOF CURB ONLY. IF UNIT IS MOUNTED SIDE SUPPLY, IT IS RECOMMENDED THAT THE DUCTS ARE SUPPORTED BY CROSS BRACES, AS DONE ON ACCESSORY ROOF CURBS.
7. SIDE DUCT FLANGES ARE 0.75" HIGH. BOTTOM DUCTS DO NOT HAVE FLANGES.
8. MINIMUM CONDENSATION TRAP HEIGHT SHALL BE 1.5 TIMES THE LOWEST NEGATIVE STATIC.
9. DIMENSIONS IN [ ] ARE IN MILLIMETERS OR KILOGRAMS.
10. OPTIONAL COIL GUARDS, POWER EXHAUST, GAS HEAT, ECONOMIZER, DISCONNECT SWITCH, CONVENIENCE OUTLET, AND BAROMETRIC RELIEF & FRESH AIR HOODS SHOWN.
11. 8 TUBE HEAT EXCHANGER IS NOT AVAILABLE FOR 3 & 4 TON UNITS.

DIRECTION OF AIRFLOW

CENTER OF GRAVITY

TONNAGE	UNIT	OPERATING WEIGHT (LBS) (BASE UNIT)	CENTER OF GRAVITY LOCATION (BASE UNIT)		4 POINT CORNER LOADS (LBS) (BASE UNIT)			
			X	Y	A	B	C	D
3	ZH	723 [328]	40 [1016]	26 [660]	175 [79]	143 [65]	182 [83]	223 [101]
4	ZH	763 [346]	40 [1016]	26 [660]	185 [84]	151 [69]	192 [87]	235 [107]
3	ZJ	740 [336]	40 [1016]	26 [660]	180 [82]	147 [67]	186 [84]	228 [103]
4	ZJ	775 [352]	40 [1016]	26 [660]	174 [79]	142 [65]	207 [94]	253 [115]
3	ZR	867 [393]	39 [991]	24 [610]	215 [98]	167 [76]	212 [96]	272 [123]

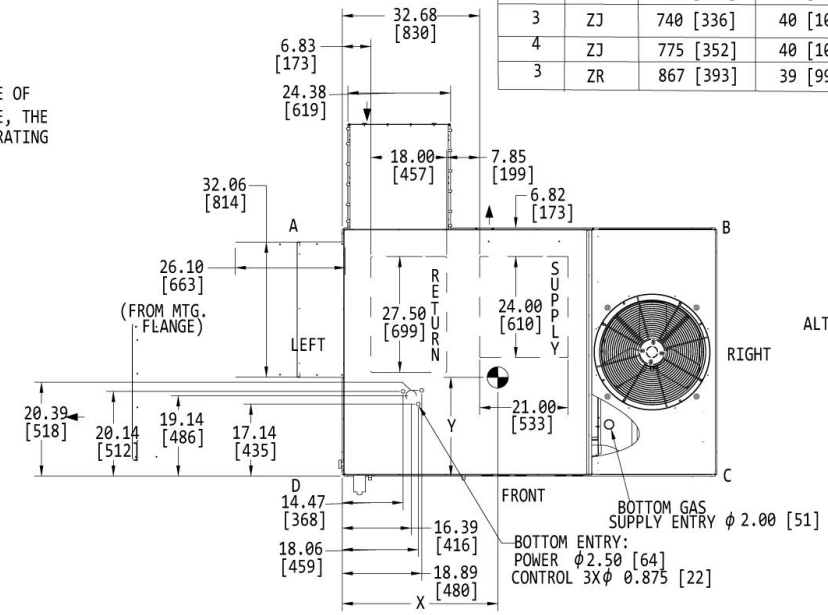

TOP VIEW

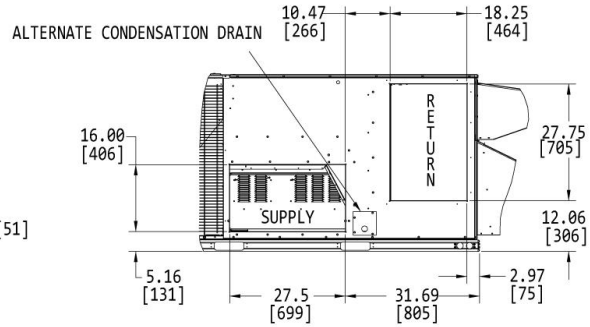

REAR (PARTIAL VIEW)
(INTAKE HOOD NOT SHOWN IN THIS VIEW)

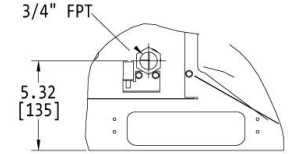

DETAIL A

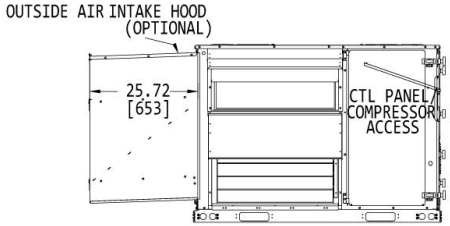

LEFT VIEW

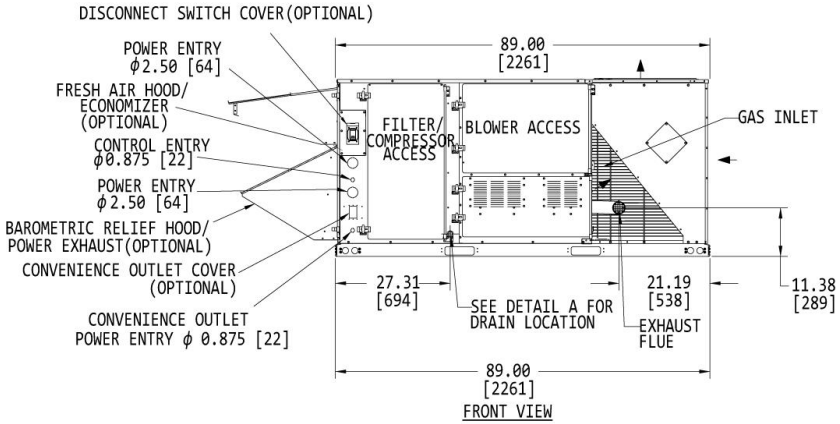

FRONT VIEW
(OPTIONAL FRONT COIL GUARD NOT SHOWN IN THIS VIEW)

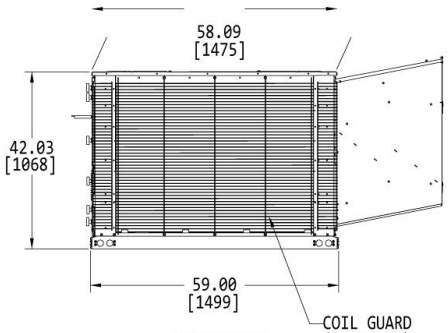

RIGHT VIEW

REFPLUS

2016

SRA-2013-R1

Niveau Sonore / Sound Rating

Condenseurs & Refroidisseurs de fluide / Condensers & Fluid coolers

Niveau de pression sonore en DBA @ 10 Ft du coté de l'unité
Sound Pressure Rating in DBA at 10 Ft from side of the unit

Modèle / Model		Arrangement																			
Condenseur - Condenser	Refroidisseur - Fluid Cooler	1X1	1X2	1X3	1X4	1X5	1X6	1X7	1X8	1X9	1X10	2X1	2X2	2X3	2X4	2X5	2X6	2X7	2X8	2X9	2X10
CCD / CCR	FCD	56	N/A	N/A	N/A	N/A	N/A	N/A	N/A	N/A	N/A	N/A	N/A	N/A	N/A	N/A	N/A	N/A	N/A	N/A	N/A
CMD* / CMR	FMD	62	65	67	N/A	N/A	N/A	N/A	N/A	N/A	N/A	65	68	70	N/A	N/A	N/A	N/A	N/A	N/A	N/A
CQD*	FQD*	55	58	59	60	61	62	N/A	N/A	N/A	N/A	58	60	62	64	65	66	N/A	N/A	N/A	N/A
CLD* / CLR / CLW	FLD	62	65	66	67	68	69	70	71	N/A	N/A	65	67	69	71	72	73	74	75	N/A	N/A
CHD*	FHD*	65	68	69	70	71	72	N/A	N/A	N/A	N/A	68	70	72	74	75	76	N/A	N/A	N/A	N/A
CID*	FID*	72	75	76	77	78	79	N/A	N/A	N/A	N/A	75	77	79	81	82	83	N/A	N/A	N/A	N/A
CNR / CNW	FND	72	75	76	77	78	79	80	81	N/A	N/A	75	77	79	81	82	83	84	85	N/A	N/A
CBR / CBW low speed	FBD low speed	53	56	58	59	60	61	61	62	N/A	N/A	56	59	61	62	63	64	65	66	N/A	N/A
CBR / CBW high speed	FBD high speed	63	66	68	69	70	71	71	72	N/A	N/A	66	69	71	72	73	74	75	76	N/A	N/A
CVD* / CVR / CVW low speed	FVD low speed	51	54	55	56	57	58	59	60	N/A	N/A	54	56	58	60	61	62	63	64	N/A	N/A
CVD* / CVR / CVW high speed	FVD high speed	59	62	63	64	65	66	67	68	N/A	N/A	62	64	66	68	69	70	71	72	N/A	N/A
CLX	FLV	62	65	66	67	68	69	70	71	71	72	65	67	69	71	72	73	74	75	76	77
CNX	FNV	72	75	76	77	78	79	80	81	82	83	75	77	79	81	82	83	84	85	86	87
CBX low speed	FBV low speed	53	56	58	59	60	61	61	62	62	63	56	59	61	62	63	64	65	66	67	68
CBX high speed	FBV high speed	63	66	68	69	70	71	71	72	73	74	66	69	71	72	73	74	75	76	77	78
CVX low speed	FVV low speed	51	54	55	56	57	58	59	60	60	61	54	56	58	60	61	62	63	64	65	66
CVX high speed	FVV high speed	59	62	63	64	65	66	67	68	69	70	62	64	66	68	69	70	71	72	73	74

* Ancien Modèle / old model
X - En attente de confirmation / to be confirmed

Pete 4 8 fan units
2 12 fan units

Les niveaux sonores sont évalués selon des lectures officielles sur un CQD, CLD et CVR.
applicables seulement sur une unité à décharge d'air verticale.
Les niveaux sonores peuvent variés selon le bruit de fond ambiant et l'arrangement des ventilateurs.

Sound ratings are evaluated from official tests done on model CQD, CLD & CVR.
Sound ratings are for vertical air flow unit.
Actual sound ratings may vary depending of background noise and mounting arrangement.

original13/03/2009