2 L-1 PEASTONE MAINTENANCE EDGE DETAIL
SCALE 1 : 25

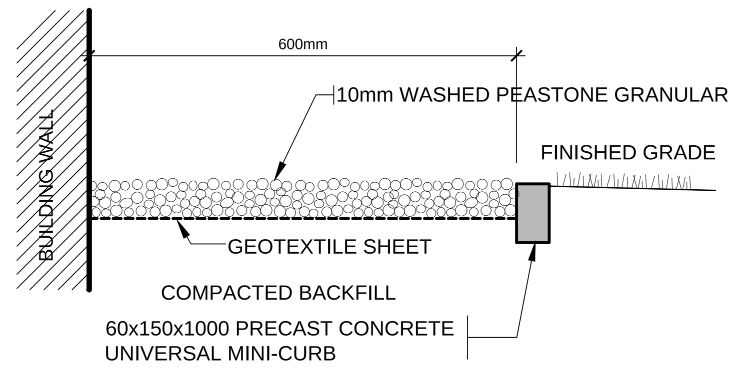

1 L-1 LANDSCAPE PLAN
SCALE 1 : 125

SCALE 1: 125

1 SP-1 SITE PLAN
SCALE = 1 : 125

SCALE 1: 125

PLANT LIST

ID.	Qty.	BOTANICAL NAME	COMMON NAME	SPACING	SCHED. SIZE	REMARKS
DECIDUOUS TREES						
AR	-	Acer Rubrum	Red Maple	See Plan	70mm cal.	WB, straight trunk, uniformly well branched
PC	-	Prunus Cisasifera	Newport Flowering Plum	See Plan	70mm cal.	WB, straight trunk, uniformly well branched
CONIFEROUS TREES						
LL	-	Larix Laricina	Tamarack	See Plan	50mm cal.	WB, straight trunk, uniformly well branched
PA	-	Picea Abies	Norway Spruce	See Plan	50mm cal.	WB, straight trunk, uniformly well branched
PG	-	Picea Glauca	White Spruce	See Plan	50mm cal.	WB, straight trunk, uniformly well branched
PN	-	Pinus Nigra	Austrian Pine	See Plan	50mm cal.	WB, straight trunk, uniformly well branched
SHRUBS						
Ap	-	Adiantum Pendatum	Maiden Hair Fern	1.0m o/c	40cm ht.	3 Gal Pots, full body, uniformly well branched
BT	-	Berberis Thunbergi	Rose Glow Barberry	1.0m o/c	40cm ht.	3 Gal Pots, full body, uniformly well branched
CA	-	Cotonester Acutifolius	Peking Cotoneaster	1.0m o/c	40cm ht.	3 Gal Pots, full body, uniformly well branched
Cakf	-	Calamagrostis Acutiflora	Karl Foerster Feather Reed Grass	1.0m o/c	60cm ht.	3 Gal Pots, full body, uniformly well branched
HA	-	Hydrangea Arborescens	Annabelle Hydrangea	1.0m o/c	60cm ht.	3 Gal Pots, full body, uniformly well branched
IV	-	Ilex Verticillata	Winterberry	2.0m o/c	100cm ht.	3 Gal Pots, full body, uniformly well branched
LT	-	Lonicera Tatarica	Arnold Red Honeysuckel	1.0m o/c	60cm ht.	3 Gal Pots, full body, uniformly well branched
PV	-	Panicum Virgatum	Prairie Fire Switch Grass	1.0m o/c	50cm ht.	3 Gal Pots, full body, uniformly well branched
Ra	-	Rhus Aromatica	Fragrant Sumac	1.0m o/c	60cm ht.	3 Gal Pots, full body, uniformly well branched
Sa	-	Spirea Arguta	Garland Spirea	1.0m o/c	60cm ht.	3 Gal Pots, full body, uniformly well branched
Si	-	Stephanadra Incisa	Cutleaf Stephanandrra	1.0m o/c	60cm ht.	3 Gal Pots, full body, uniformly well branched
SV	-	Spirea Vanhouttei	Bridalwreath Spirea	1.0m o/c	50cm ht.	3 Gal Pots, full body, uniformly well branched
SyV	-	Syringa Vulgaris	Common Lilac	1.5m o/c	100cm ht.	3 Gal Pots, full body, uniformly well branched
RR	-	Rosa Rugrosa	Rugosa Rose	1.0m o/c	90cm ht.	3 Gal Pots, full body, uniformly well branched

SEE PLAN FOR QUANTITIES

IRRIGATION: PROVIDE FULL COVERAGE DRIP IRRIGATION TO ALL PLANT BEDS, TREE PITS AND PLANTERS

3 L-1 TREE PLANTING IN UNIT PAVER WALK DETAIL
SCALE N.T.S. (SEE CITY OF OTTAWA PLANTING DETAIL)

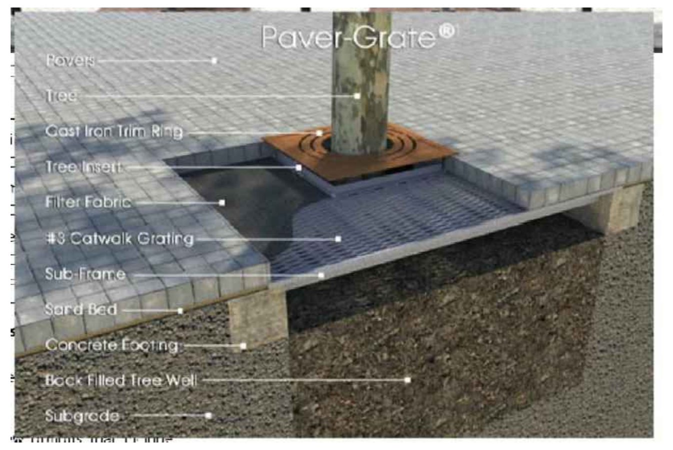

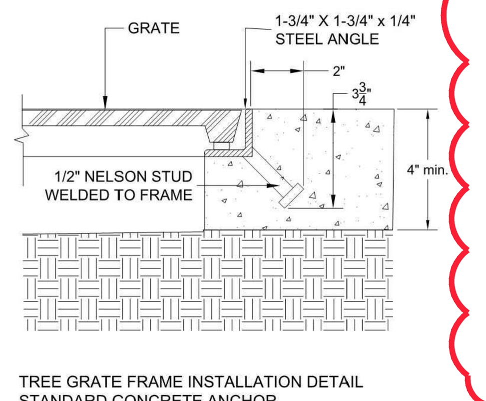

TREE GRATE FRAME INSTALLATION DETAIL
STANDARD CONCRETE ANCHOR

PROVIDE 1800X1800MM SQUARE IRONSMITH PAVER-GRATE SUSPENDED PAVER SYSTEM (OR APPROVED EQUIVALENT) C/W METAL ANCHOR FRAME FOR MOUNTING IN CONCRETE COLLAR FOOTING. PAVER GRATE SYSTEM TO INCLUDE 915X915MM INTEGRATED CAST IRON 'BOND STREET' TREE GRATE WITH 400MM TREE OPENING POWDER COATED DARK GREY. CONCRETE COLLAR TO BE PROVIDED BY LANDSCAPING CONTRACTOR. GEOTEXTILE FABRIC TO BE PLACED OVER PAVER GRATE AS PER MANUFACURERS' RECOMMENDATIONS.

4 L-1 TYPICAL PAVERS ON CONCRETE DECK & COMPACTED GRADE
SCALE 1 : 20

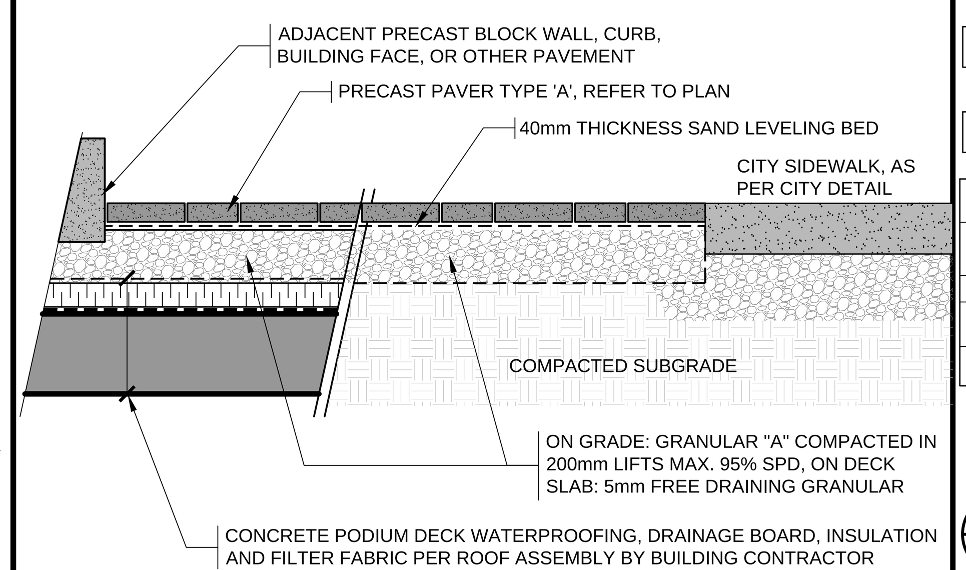

5 L-1 PRECAST PAVERS TYPES
SCALE 1 : 20

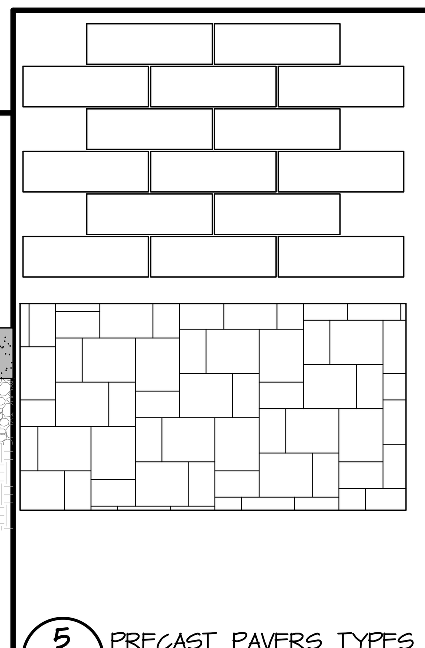

TYPE 'A'
8 x 16 x 2 1/4" (20 x 40 x 7cm)
TYPE A:
20x40x7cm PRECAST PAVER AS SENZO, COLOR: NUVOLA AS MANUFACTURED BY UNILOCK OR AN APPROVED EQUAL.

TYPE 'B'
8 x 8 x 2 1/4" (20 x 20 x 7cm)
TYPE B:
20x20x7cm PRECAST PAVER AS SENZO, COLOR: NUVOLA AS MANUFACTURED BY UNILOCK OR AN APPROVED EQUAL.

EDGER:
8"x3"x39" PRECAST UNIVERSAL CURB AS MANUFACTURED BY PERMACON.

TYPE 'C' BLDG TERRACE
LENGTH & DEPTH VARY x 45mm HT. PRECAST SLAB BY TECHO-BLOC - BLU 45 SMOOTH, COLOUR TO BE CONFIRMED

6 L-1 BENCH
SCALE 1 : 15

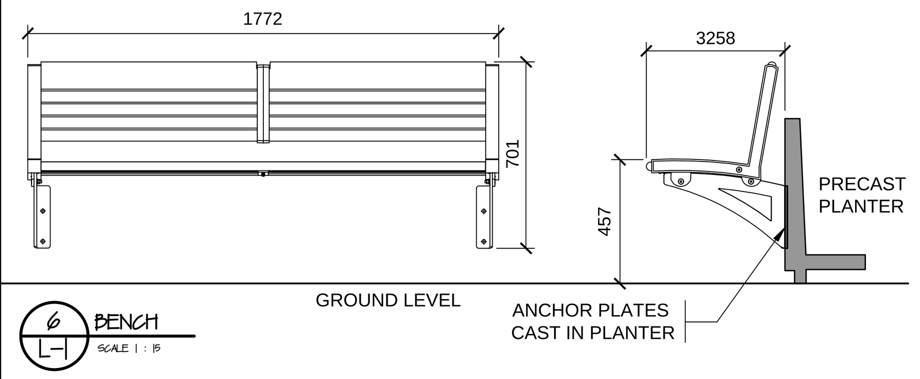

ACCEPTABLE MATERIAL AS PER MAGLIN PRODUCT MLB720 CL-W 720SERIES OR AN APPROVED EQUAL. SOLID CAST ALUMINUM FRAME PIECES WITH IPE WOOD SLATS, 1772LX700HTX521DEEP SEAT, POWDERCOATED CLEAR.

7 L-1 TRASH CONTAINER
SCALE 1 : 15

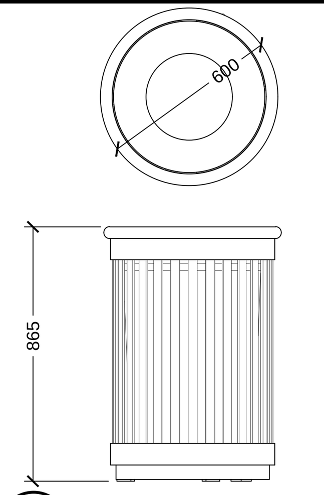

8 L-1 BIKE RACK
SCALE 1 : 15

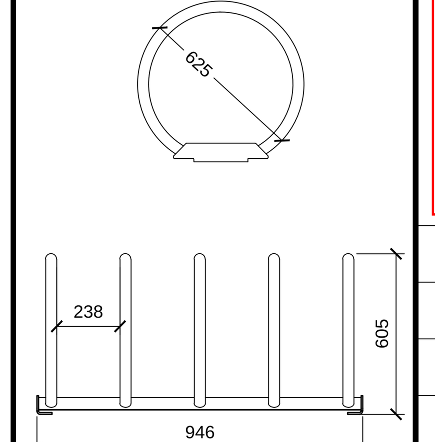

9 L-1 CONCRETE PLANTER
SCALE 1 : 15

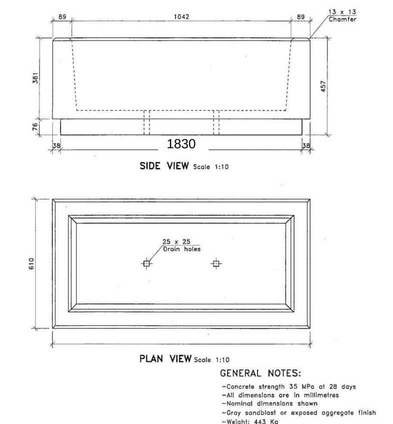

PLANTERS:
1830x610x610mm PRECAST UNITS
SANDBLASTED FINISH WITH DRAIN OPENIGS
AND ANCHOR PLATES FOR BENCH MOUNTS.

TRASH CONTAINER
ACCEPTABLE MATERIAL AS PER MAGLIN PRODUCT MLWR250-32-ST OR AN APPROVED EQUAL. METAL FABRICATION 86,5HTX63.5DIA POWDERCOATED DARK GRAY.

BICYCLE RACK
ACCEPTABLE MATERIAL AS PER MAGLIN PRODUCT MBR350-5-S 350SERIES OR AN APPROVED EQUAL. METAL FABRICATION 60.5HTX62.5DIA.X122.6LENGTH POWDERCAOTED DARK GRAY.

10 L-1 NOT USED
SCALE 1 : 15

FENCE:
By: FENCE ALL
STYLE : KINGS
1500mm HT.
COLOUR BLACK,
PYRAMID CAP

FENCE TO EXTEND FULL LENGTH OF WEST SIDE AND NORTH SIDE OF PROPERTY LINE

11 L-1 PERMETER METAL PICKET FENCE / GATE
SCALE 1 : 20

ACCEPTABLE MATERIAL AS PER MAGLIN PRODUCT MTB650_B# 650SERIES OR AN APPROVED EQUAL. 84.5HTX19.7DIA. POWDERCOATED DARK GRAY. REQUIRES A CONCRETE FOOTING TO BE COORDINATED WITH UNIT PAVERS INSTALLATION.

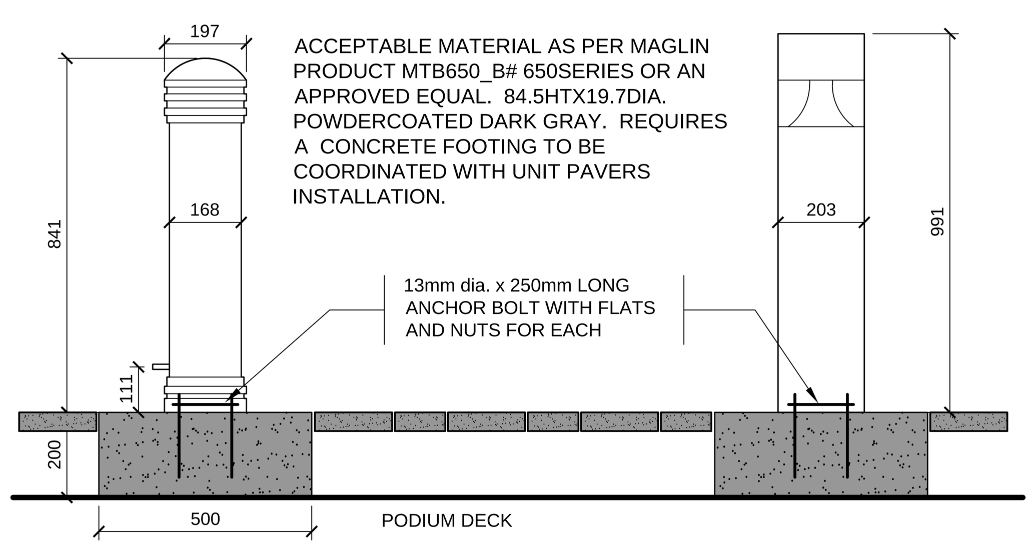

12 L-1 TRAFFIC BOLLARD
SCALE 1 : 15

13 L-1 LIGHT BOLLARD
SCALE 1 : 15 (SEE ELECTRICAL)

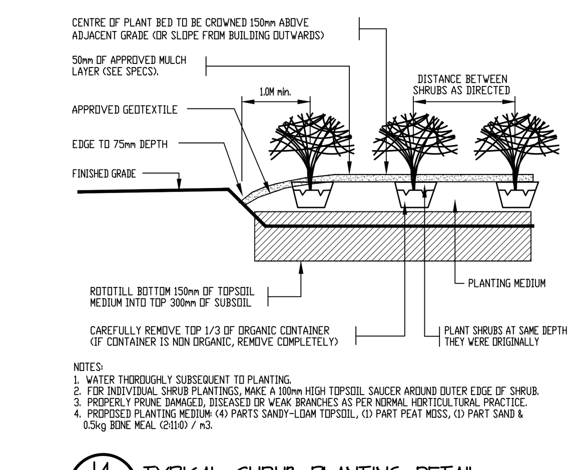

NOTES:
1. WATER THOROUGHLY SUBSEQUENT TO PLANTING.
2. FOR INDIVIDUAL SHRUB PLANTINGS, MAKE A 100mm HIGH TOPSOIL SAUCER AROUND OUTER EDGE OF SHRUB.
3. PROPERLY PRUNE DAMAGED, DISEASED OR WEAK BRANCHES AS PER NORMAL HORTICULTURAL PRACTICE.
4. PROPOSED PLANTING MEDIUM: (4) PARTS SANDY-LOAM TOPSOIL, (1) PART PEAT MOSS, (1) PART SAND & 0.5kg BONE MEAL (2:11:0) / m3.

14 L-1 TYPICAL SHRUB PLANTING DETAIL
SCALE 1 : 25

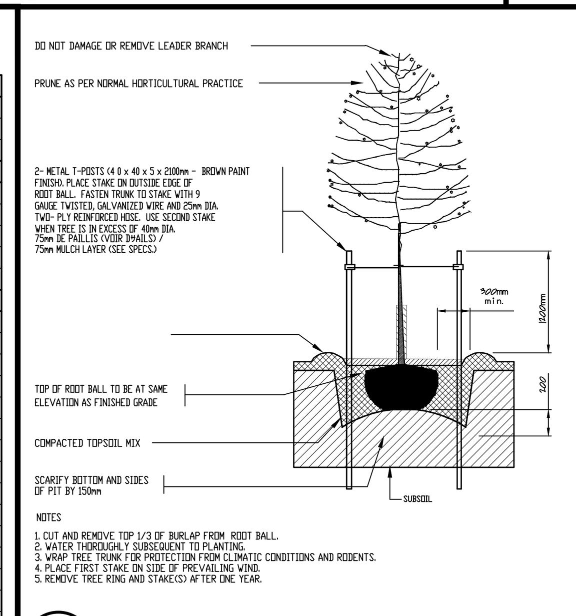

NOTES
1. CUT AND REMOVE TOP 1/3 OF BURLAP FROM ROOT BALL.
2. WATER THOROUGHLY SUBSEQUENT TO PLANTING.
3. WRAP TREE TRUNK FOR PROTECTION FROM CLIMATIC CONDITIONS AND RODENTS.
4. PLACE FIRST STAKE ON SIDE OF PREVAILING WIND.
5. REMOVE TREE RING AND STAKE(S) AFTER ONE YEAR.

15 L-1 TYPICAL DECIDUOUS TREE PLANTING DETAIL
SCALE 1 : 25

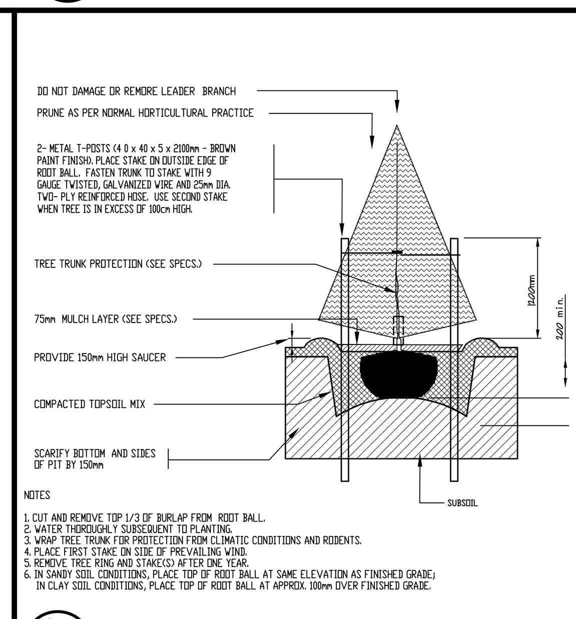

NOTES
1. CUT AND REMOVE TOP 1/3 OF BURLAP FROM ROOT BALL.
2. WATER THOROUGHLY SUBSEQUENT TO PLANTING.
3. WRAP TREE TRUNK FOR PROTECTION FROM CLIMATIC CONDITIONS AND RODENTS.
4. PLACE FIRST STAKE ON SIDE OF PREVAILING WIND.
5. REMOVE TREE RING AND STAKE(S) AFTER ONE YEAR.
6. IN SANDY SOIL CONDITIONS, PLACE TOP OF ROOT BALL AT SAME ELEVATION AS FINISHED GRADE; IN CLAY SOIL CONDITIONS, PLACE TOP OF ROOT BALL AT APPROX. 100mm OVER FINISHED GRADE.

16 L-1 TYPICAL CONIFEROUS TREE PLANTING DETAIL
SCALE 1 : 25

GENERAL NOTES

1. ALL GENERAL SITE INFORMATION AND CONDITIONS COMPILED FROM EXISTING PLANS AND CONSULTANT'S FIELD NOTES. REPORT ALL DISCREPANCIES PRIOR TO ANY WORK. NO RESPONSIBILITY IS BORN BY THE CONSULTANT FOR UNDERLYING SUBSURFACE CONDITIONS.
2. THE CONTRACTOR IS TO NOTIFY ALL UTILITY COMPANIES PRIOR TO EXCAVATION TO ASCERTAIN LOCATION OF UNDERLYING SERVICES. VERIFY ALL ELEVATIONS WITH INFORMATION SHOWN.
3. ALL DIMENSIONS AND GRADES ARE TO BE VERIFIED ON SITE PRIOR TO ANY CONSTRUCTION BY THE LANDSCAPE ARCHITECT.
4. CONTRACTOR IS TO MAINTAIN POSITIVE SURFACE RUNOFF THROUGHOUT THE ENTIRE CONSTRUCTION PERIOD.
5. REINSTATE ALL DAMAGE CAUSED CONTRACTOR TO STRUCTURES, CURBS, PAVEMENT, PLANTING, ROAD SHOULDERS AND OTHER SITE AMENITIES.
6. CONTRACTOR TO STAKE PLANTING LOCATION AND OTHER SITE AMENITIES, UNDER SUPERVISION OF LANDSCAPE ARCHITECT, PRIOR TO ANY WORK.
7. EACH TASK OF WORK TO BE APPROVED BY THE LANDSCAPE ARCHITECT PRIOR TO PROCEEDING TO THE NEXT.
8. NO MODIFICATIONS TO PLANS AND DETAILS, AND NO MATERIALS SUBSTITUTIONS IS PERMITTED WITHOUT THE WRITTEN AUTHORIZATION OF THE LANDSCAPE ARCHITECT.
9. USE OF THIS PLAN WITHOUT THE LANDSCAPE ARCHITECT'S SEAL AND SIGNATURE IS NOT ALLOWED AND RELEASE THE LANDSCAPE ARCHITECT OR ANY RESPONSIBILITY.

APPROVED
By Derrick Moodie at 2:55 pm, Nov 28, 2018

DERRICK MOODIE
MANAGER
PLANNING, INFRASTRUCTURE & ECONOMIC DEVELOPMENT DEPARTMENT, CITY OF OTTAWA

NO	DATE	REVISION
6	Oct. 26, 18	ISSUED FOR ADDENDUM #5
5	Oct. 10, 18	ISSUED FOR TENDER
4	Sept 6, 18	ISSUED FOR BUILDING PERMIT
3	Aug 15, 18	REVISED AS PER SPC COMMENTS
2	May 29, 18	REVISED AS PER SPC COMMENTS
1	Nov. 30, 17	ISSUED FOR SITE PLAN CONTROL

THE AZURE
LIVE LIFE BEAUTIFULLY
Azure Urban Developments Inc.

Kallala DESIGNS
(819) 422-3313 BOX 6, R.R.1. LOW P.Q. J0X 2C0

PROJECT
THE AZURE
929 Richmond Road
OTTAWA ONTARIO

TITLE
LANDSCAPE PLAN

NORTH

DRAWN BY: J.W. / R.V.
DATE: Oct. 2017
SCALE: 1 : 125
VERIFIED BY: J. Wheeler
PROJET NO. KD-2017
PLAN NO. L-1
REV #2

SEAL
ONTARIO ASSOCIATION OF LANDSCAPE ARCHITECTS — F. WHEELER — OALA — MEMBER

D07-12-14-0014

PAPER SIZE: ISO Full Bleed B1 (707.00 X 1000.00 MM) | PLOT DATE: Monday, November 19, 2018 | PLOT SCALE: 1:1 | PEN STYLE: 0-RLA-MASTER-100%.ctb

F:\2017\1719 - 929 Richmond-Woodroffe (Azure)\01_Design Development\1719 Landscape 2018 09 30.dwg