DRAWING NOTES

1.0 GENERAL

1.1 CONTRACTOR TO VERIFY ALL DIMENSIONS PRIOR TO CONSTRUCTION.

1.2 DO NOT SCALE DRAWINGS.

1.3 CONTRACTOR TO REPORT ALL DISCOVERIES OF ERRORS, OMISSIONS OR DISCREPANCIES TO THE ARCHITECT OR DESIGN ENGINEER AS APPLICABLE.

1.4 USE ONLY THE LATEST REVISED DRAWINGS OR THOSE THAT ARE MARKED 'ISSUED FOR CONSTRUCTION'.

1.5 ALL CONSTRUCTION SHALL COMPLY WITH CURRENT CITY OF OTTAWA STANDARDS AND SPECIFICATIONS.

1.6 THIS DRAWING SHALL BE READ IN CONJUNCTION WITH ALL RELEVANT DRAWINGS AND SPECIFICATIONS.

1.7 FOR LEGAL SURVEY INFORMATION REFER TO REGISTERED PLAN.

1.8 ALL IRON WORK ELEVATIONS SHOWN ARE APPROXIMATE AND ARE SUBJECT TO MINOR ADJUSTMENTS AS DETERMINED BY THE ENGINEER.

1.9 ALL CONCRETE CURBS AND SIDEWALKS TO CONFORM TO O.P.S. AND CONSTRUCTED TO CITY STANDARDS. ALL ONSITE CURBS TO BE BARRIER TYPE.

1.10 ALL CONCRETE SHALL BE 'NORMAL PORTLAND CEMENT' IN ACCORDANCE WITH O.P.S.S. 1350 AND SHALL ACHIEVE A MINIMUM STRENGTH OF 30MPa AT 28 DAYS.

1.11 ALL CONSTRUCTION TRAFFIC TO ACCESS SITE OFF STRANDHERD DRIVE.

1.12 CONTRACTOR TO PROTECT EXISTING INFRASTRUCTURE AND PROPERTY SUCH AS TREES, PARKING METERS, SIDEWALKS, CURBS, ASPHALT, AND STREET SIGNS FROM DAMAGE DURING CONSTRUCTION. CONTRACTOR TO PAY THE COST TO REINSTATE OR REPLACE ANY DAMAGED INFRASTRUCTURE OR PROPERTY TO THE SATISFACTION OF THE CITY.

1.13 THE POSITION OF POLE LINES, CONDUITS, WATERMAIN, SEWERS, AND OTHER UNDERGROUND AND ABOVEGROUND UTILITIES AND STRUCTURES ARE NOT NECESSARILY SHOWN ON THE CONTRACT DRAWINGS, AND WHERE SHOWN, THE ACCURACY OF THE POSITION OF SUCH UTILITIES AND STRUCTURES IS NOT GUARANTEED. BEFORE STARTING WORK THE CONTRACTOR SHALL INFORM HIMSELF OF THE EXACT LOCATION OF ALL SUCH UTILITIES AND STRUCTURES, SHALL PROTECT ALL UTILITIES AND STRUCTURES, AND SHALL ASSUME ALL LIABILITY FOR DAMAGE TO THEM.

1.14 CONTRACTOR TO SUPPLY SUITABLE FILL MATERIAL WHERE REQUIRED TO ROUGH GRADE THE SITE.

1.15 CONTRACTOR TO HAUL EXCESS MATERIAL OFFSITE AS NECESSARY TO GRADE SITE TO MEET THE PROPOSED GRADES. ALL EXCESS MATERIAL TO BE HAULED OFFSITE AND DISPOSED OF AT AN APPROVED DUMP SITE. SHOULD THE CONTRACTOR DISCOVER ANY HAZARDOUS MATERIAL, CONTRACTOR IS TO NOTIFY ENGINEER. ENGINEER TO DETERMINE APPROPRIATE DISPOSAL METHOD/LOCATION.

1.16 ALL DISTURBED BOULEVARDS TO BE REINSTATED WITH SOD ON 100mm TOPSOIL.

1.17 UTILITY DUCTS TO BE INSTALLED PRIOR TO ROAD BASE CONSTRUCTION.

1.18 REFER TO ARCHITECTURAL SITE PLAN FOR PAVEMENT MARKING, PREPARED BY SCOLER LEE AND ASSOC.

1.19 CONTRACTOR TO UNCOVER EXISTING UTILITIES WELL IN ADVANCE OF PIPE LAYING IN ORDER TO CORRECT GRADE CONFLICTS AS REQUIRED, IF REQUIRED.

1.20 JOB BENCHMARKS:
- BM#1 MAGNETIC NAIL IN BASE OF LAMP STANDARD ELEV. 97.576
- BM#2 T/G EX. CBMH32 ELEV. 96.750

1.21 BACKWATER VALVE REQUIRED ON BUILDING SERVICES PER CITY STANDARDS REFER TO MECHANICAL.

1.22 REFER TO MECHANICAL FOR ROOF DRAIN LOCATION

2.0 SANITARY

2.1 ALL SANITARY SEWERMAINS TO BE CSA CERTIFIED PVC SDR 35, BELL AND SPIGGOT TYPE. ONLY FACTORY FITTINGS TO BE USED. SEWER TO BE INSTALLED AS PER OSPD 1005.01.

2.2 ALL SANITARY MAINTENANCE HOLES TO BE 1.2m DIAMETER AS PER CITY OF OTTAWA STANDARDS COMPLETE WITH BENCHING, STEPS IF REQUIRED, AND FRAME AND COVER.

2.3 SANITARY MH FRAME AND COVER TO BE CLOSED COVER TYPE, AS PER CITY STANDARD S24.

2.4 SANITARY SEWER LEAKAGE TEST AND CCTV INSPECTION SHALL BE COMPLETED AS PER CITY SPECIFICATIONS PRIOR TO INSTALLATION OF BASE COURSE ASPHALT.

2.5 ANY SANITARY SEWER WITH LESS THAN 1.8m COVER REQUIRES THERMAL INSULATION AS PER CITY OF OTTAWA STANDARD W22, OR AS APPROVED BY THE ENGINEER.

2.6 CONNECTION TO THE EXISTING SANITARY SEWER TO BE INCLUDED IN THE COST FOR SANITARY SEWER INSTALLATION. THIS INCLUDES REINSTATEMENT OF ROAD CUTS TO CITY STANDARDS.

3.0 STORM

3.1 ALL STORM SEWER TO BE CSA CERTIFIED PVC SDR 35 OR CONCRETE CLASS 100-D, BELL AND SPIGGOT TYPE. ALL STORM SEWERS TO BE INSTALLED PER MANUFACTURER'S INSTRUCTIONS. ONLY FACTORY FITTINGS TO BE USED.

3.2 ALL STORM MAINTENANCE HOLES TO BE SIZED IN WITH THE PLANS AND AS PER CITY OF OTTAWA STANDARDS COMPLETE WITH BENCHING FOR SEWERS 900mm OR GREATER, STEPS IF REQUIRED, AND FRAME AND COVER.

3.3 STORM MH FRAME AND COVERS TO BE OPEN TYPE, AS PER CITY STANDARD S24. CONTRACTOR TO INSTALL FILTER FABRIC UNDER STORM MH COVER UNTIL SODDING IS COMPLETE.

3.4 STORM MAINTENANCE HOLES TO BE AS PER OPSD 701.010, TAPER TOP TYPE COMPLETE WITH 300mm SUMP FOR SEWER LESS THAN 900mmø.

3.5 ANY STORM SEWER WITH LESS THAN 1.8m COVER REQUIRES THERMAL INSULATION AS PER CITY OF OTTAWA STANDARD W22, OR AS APPROVED BY THE ENGINEER.

3.6 CONNECTION TO THE EXISTING STORM SEWER TO BE INCLUDED IN THE COST FOR STORM SEWER INSTALLATION. THIS INCLUDES REINSTATEMENT OF ROAD CUT TO CITY STANDARDS.

4.0 WATER

4.1 ALL WATER SERVICES TO BE COPPER OR APPROVED EQUAL WITH MINIMUM COVER OF 2.4 m AND INSTALLED AS PER CITY OF OTTAWA STANDARDS.

4.2 THRUST BLOCKS TO BE INSTALLED AT ALL BENDS, TEES, AND CAPS ALL AS PER OPSD 1103.01 AND 1103.02.

4.3 CONTRACTOR TO CONDUCT PRESSURE AND LEAKAGE TESTING OF ALL WATERMAINS AND DISINFECT AND CHLORINATE ALL WATERMAINS TO THE SATISFACTION OF M.O.E.E. AND THE CITY OF OTTAWA.

4.4 TRACER WIRE TO BE INSTALLED ALONG THE FULL LENGTH OF WATERMAIN AND ATTACHED TO EACH MAIN STOP AS PER MUNICIPAL STANDARDS.

4.5 ALL COMPONENTS OF THE WATER DISTRIBUTION SYSTEM SHALL BE CATHODICALLY PROTECTED AS PER MUNICIPAL STANDARDS.

4.6 ALL VALVES & VALVE BOXES, HYDRANTS, AND HYDRANT VALVES AND ASSEMBLIES SHALL BE INSTALLED AS PER CITY OF OTTAWA STANDARDS.

4.7 ANY WATERMAIN WITH LESS THAN 2.4m COVER REQUIRES THERMAL INSULATION AS PER CITY OF OTTAWA STANDARD W22, OR AS APPROVED BY THE ENGINEER.

4.8 CONTRACTOR IS RESPONSIBLE FOR ACQUIRING THE WATER PERMIT FROM THE CITY OF OTTAWA AND PAYMENT OF ANY FEES ASSOCIATED WITH SECURING THE WATER PERMIT. OWNER IS RESPONSIBLE FOR REIMBURSING THE CONTRACTOR FOR THE ACTUAL COST OF ACQUIRING THE WATER PERMIT.

4.9 CONNECTION TO EXISTING WATERMAIN TO BE CITY FORCES, EXCAVATION AND BACKFILLING AND REINSTATEMENT BY CONTRACTOR, COST TO BE INCLUDING THE COST FOR THE WATERMAIN INSTALLATION. THIS COST INCLUDES REINSTATEMENT OF ROAD CUTS TO CITY STANDARDS.

4.10 ALL WATERMAIN CROSSING AS PER CITY OF OTTAWA STANDARDS W25 & W25.2

5.0 ROADS

5.1 CONTRACTOR TO REINSTATE ROAD CUTS PER CITY OF OTTAWA STANDARD R-10.

5.2 THE CONTRACTOR SHALL PREPARE A TRAFFIC MANAGEMENT PLAN FOR REVIEW AND APPROVAL BY THE ENGINEER. CONTRACTOR TO MAINTAIN TRAFFIC FLOW DURING THE ENTIRE CONSTRUCTION PERIOD UNLESS OTHERWISE APPROVED BY THE ENGINEER. MAINTENANCE OF ROAD CUTS SHALL BE THE RESPONSIBILITY OF THE CONTRACTOR. PROVISION OF FLAGMEN, DETOURS AS NECESSARY, BARRICADES AND SIGNS TO THE FULL SATISFACTION OF THE ENGINEER AND ROAD AUTHORITY SHALL BE THE CONTRACTOR'S RESPONSIBILITY.

5.3 CONTRACTOR TO PREPARE SUBGRADE, INCLUDING PROOFROLLING, TO THE SATISFACTION OF THE GEOTECHNICAL ENGINEER PRIOR TO THE COMMENCEMENT OF PLACEMENT OF GRANULAR B MATERIAL.

5.4 FILL TO BE PLACED AND COMPACTED PER THE GEOTECHNICAL REPORT REQUIREMENTS.

5.5 CONTRACTOR TO SUPPLY, PLACE AND COMPACT GRANULAR B MATERIAL IN ACCORDANCE WITH THE RECOMMENDATIONS OF THE GEOETCHNICAL ENGINEER. CONTRACTOR TO PROVIDE ENGINEER WITH SAMPLES OF GRANULAR B MATERIAL FOR TESTING AND CERTIFICATION FROM THE GEOTECHNICAL ENGINEER THAT THE MATERIAL MEETS THE GRADATION REQUIREMENTS SPECIFIED IN THE GEOTECHNICAL REPORT.

5.6 GRANULAR A MATERIAL ONLY TO BE PLACED ONLY UPON APPROVAL BY THE GEOTECHNICAL ENGINEER OF GRANULAR B PLACEMENT.

5.7 CONTRACTOR TO SUPPLY, PLACE AND COMPACT GRANULAR A MATERIAL IN ACCORDANCE WITH THE RECOMMENDATIONS OF THE GEOETCHNICAL ENGINEER. CONTRACTOR TO PROVIDE ENGINEER WITH SAMPLES OF GRANULAR A MATERIAL FOR TESTING AND CERTIFICATION FROM THE GEOTECHNICAL ENGINEER THAT THE MATERIAL MEETS THE GRADATION REQUIREMENTS SPECIFIED IN THE GEOTECHNICAL REPORT.

5.8 ASPHALT MATERIAL TO BE PLACED ONLY UPON APPROVAL BY THE GEOTECHNICAL ENGINEER OF GRANULAR A PLACEMENT.

5.9 CONTRACTOR TO SUPPLY, PLACE AND COMPACT ASPHALT MATERIAL IN ACCORDANCE WITH THE RECOMMENDATIONS OF THE GEOTECHNICAL ENGINEER. CONTRACTOR TO PROVIDE ENGINEER WITH SAMPLES OF ASPHALT MATERIAL FOR TESTING AND CERTIFICATION FROM THE GEOTECHNICAL ENGINEER THAT THE MATERIAL MEETS THE REQUIREMENTS SPECIFIED IN THE GEOTECHNICAL REPORT.

5.10 CONTRACTOR IS RESPONSIBLE FOR ESTABLISHING LINE AND GRADE IN ACCORDANCE WITH THE PLANS, AND FOR PROVIDING THE ENGINEER WITH VERIFICATION PRIOR TO PLACEMENT.

5.11 CONTRACTOR TO REINSTATE ANY DISTURBED AREA WITHIN EXISTING ROW OR ADJACENT LANDS TO THE BETTER OF IMPORTED SOD ON 100MM TOPSOIL, OR TO MATCH ORIGINAL CONDITION.

5.12 ALL EXCESS MATERIAL TO BE HAULED OFFSITE AND DISPOSED OF AT AN APPROVED DUMP SITE. SHOULD THE CONTRACTOR DISCOVER ANY HAZARDOUS MATERIAL, CONTRACTOR IS TO NOTIFY ENGINEER. ENGINEER TO DETERMINE APPROPRIATE DISPOSAL METHOD/LOCATION.

5.13 PAVEMENT STRUCTURE (MATERIAL TYPES AND THICKNESSES) FOR HEAVY DUTY AND LIGHT DUTY AREAS TO BE AS SPECIFIED IN THE GEOTECHNICAL REPORT AND SHOWN ON THE PLANS.

6.0 SEDIMENT AND EROSION CONTROL

6.1 CONTRACTOR TO IMPLEMENT EROSION AND SEDIMENT CONTROL MEASURES AS IDENTIFIED IN THE EROSION AND SEDIMENT CONTROL PLAN TO THE SATISFACTION OF THE CITY OF OTTAWA, PRIOR TO UNDERTAKING ANY SITE ALTERATIONS (FILLING, GRADING, REMOVAL OF VEGETATION, ETC.). DURING ALL PHASES OF THE SITE PREPARATION AND CONSTRUCTION THE MEASURES ARE TO BE MAINTAINED TO THE SATISFACTION OF THE ENGINEER AND CITY OF OTTAWA IN ACCORDANCE WITH THE BEST MANAGEMENT PRACTICES FOR EROSION AND SEDIMENT CONTROL. SHOULD ANY ADDITIONAL MEASURES BE REQUIRED TO ADDRESS FIELD CONDITIONS THEY SHALL BE INSTALLED AS DIRECTED BY THE ENGINEER OR THE CITY OF OTTAWA. THE CONTRACTOR ACKNOWLEDGES THAT FAILURE TO IMPLEMENT APPROPRIATE EROSION AND SEDIMENT CONTROL MEASURES MAY BE SUBJECT TO PENALTIES IMPOSED BY ANY APPLICABLE REGULATORY AGENCY.

6.2 ANY GROUND WATER PUMPING IS LIMITED TO 10 000l/d, AND SHALL BE DISCHARGED IN TO AN APPROVED FILTER MECHANISM PRIOR TO RELEASE TO THE ENVIRONMENT.

6.3 SEEPAGE BARRIERS WILL BE CONSTRUCTED IN ANY TEMPORARY DRAINAGE DITCH.

6.4 SILT SACKS OR APPROVED EQUIVALENT, WILL BE PLACED ON NEW OPEN INFRASTRUCTURES SUCH AS MANHOLES AND CATCH BASINS UNTIL STRUCTURES ARE COMMISSIONED AND PUT IN USE.

7.0 GEOTECHNICAL.

7.1 FOR DETAILS OF TEST PITS AND VARIOUS CONSTRUCTION REQUIREMENTS SEE GEOTECHNICAL REPORT, BY PATERSON GROUP DATED JUNE 20, 2018.

7.2 FILL MATERIAL WITHIN THE PARKING LOT AND BUILDING PAD AREAS, AND SUPPORTING BUILDING FOUNDATIONS SHALL BE COMPACTED TO 98% STANDARD MODIFIED PROCTOR DENSITY AND TO THE SATISFACTION OF THE GEOTECHNICAL ENGINEER.

7.3 ALL FILL MATERIAL TO BE CERTIFIED AS ACCEPTABLE BY THE GEOTECHNICAL ENGINEER.

7.4 ALL COMPACTION METHODS TO BE PERFORMED TO THE SATISFACTION OF THE GEOTECHNICAL ENGINEER TO INCLUDE BUT NOT BE LIMITED TO THE THICKNESS OF LIFTS, AND COMPACTION EQUIPMENT USED.

7.5 CLAY SEALS TO BE INSTALLED WHERE INDICATED ON THE DRAWINGS OR AS APPROVED AND DIRECTED BY THE GEOTECHNICAL ENGINEER ALL IN ACCORDANCE WITH CITY OF OTTAWA STANDARDS AND SPECIFICATIONS.

7.6 PIPE BEDDING AND BACKFILL SHALL BE COMPLETED IN ACCORDANCE WITH LATEST CITY OF OTTAWA STANDARD. AT A MINIMUM BEDDING FOR SEWER AND WATERMAIN SHALL BE 150mm OPSS GRANULAR A, COMPACTED TO 95% SPMDD AND EXTEND TO SPRINGLINE OF PIPE. COVER MATERIAL SHALL CONSIST OF OPSS GRANULAR A AND SHALL EXTEND FROM SPRINGLINE TO MINIMUM 300mm ABOVE OBVERT OF PIPE, AND COMPACTED TO 95% SPMDD. SEE GEOTECHNICAL REPORT FOR ADDITIONAL DETAILS.

LEGEND:

Symbol	Description
200ø STORM	EXISTING STORM SEWER
200ø SANITARY	EXISTING SANITARY SEWER
150ø WATERMAIN	EXISTING WATERMAIN
200ø STORM	PROPOSED STORM SEWER
200ø SANITARY	PROPOSED SANITARY SEWER
150ø WATERMAIN	PROPOSED WATERMAIN
EXSANMH10A	EXISTING SANITARY MANHOLE
EXSTMH10	EXISTING STORM MANHOLE
HYD B/F 85.68	EXISTING HYDRANT C/W BOTTOM OF FLANGE ELEVATION
CB	EXISTING CATCHBASIN
SANMH10A	PROPOSED SANITARY MANHOLE
STMH10	PROPOSED STORM MANHOLE
CBMH2	PROPOSED CATCHBASIN MANHOLE
HYD B/F 85.68	PROPOSED HYDRANT C/W BOTTOM OF FLANGE ELEVATION
CB	PROPOSED CATCHBASIN
	BARRIER CURB
DC	DEPRESSED CURB
RM	PROPOSED REMOTE WATER METER
M	PROPOSED WATER METER
LS	EXISTING LIGHT POLE
	REGULAR ASPHALT TO BE SAW CUT AND REINSTATE WITH STEP JOINT AS PER CITY STANDARDS
	HEAVY DUTY ASPHALT TO BE SAW CUT AND REINSTATE WITH STEP JOINT AS PER CITY STANDARDS
	SILT FENCE AS PER OPSD-219.110
	FILTER FABRIC TO BE PLACED BENEATH STRUCTURE FRAME. FILTER FABRIC TO REMAIN IN PLACE UNTIL SITE IS STABILIZED AND VEGETATION IS ESTABLISHED.

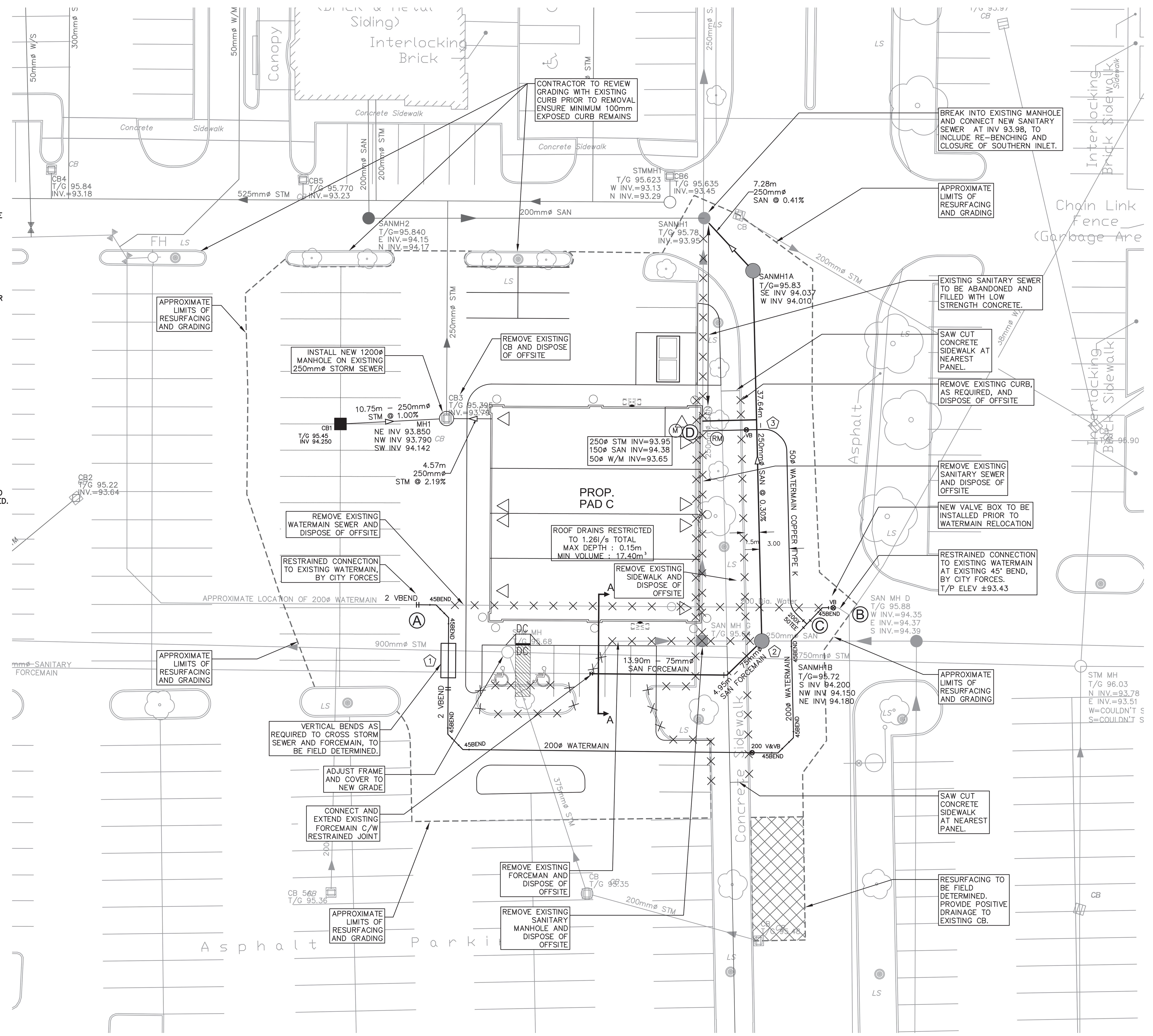

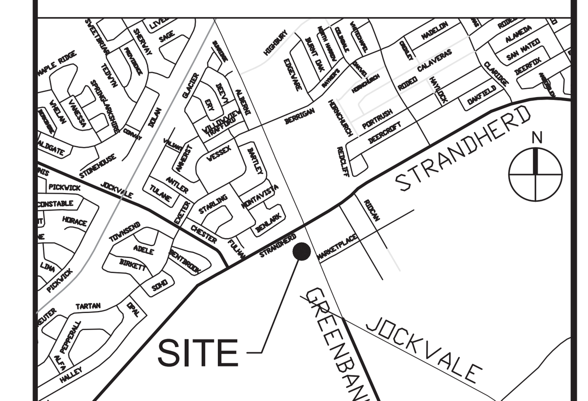

KEY PLAN
N.T.S.

OWNER : STEVE BISHOP
NORTH AMERICAN DEVELOPMENT GROUP.
2851 JOHN ST, SUITE ONE, MARKHAM, ONTARIO, L3R 5R7
TEL: (905)477-9200

APPLICANT : RON RICHARDS
R. G. RICHARDS & ASSOCIATES
1568 BOXWOOD WAY, MISSISSAUGA, ONTARIO, L5E 2X9
TEL: (416)219-5122

ARCHITECT : SCOLER LEE + ASSOCIATES ARCHITECTS INC.
STE 900, 60 ST, CLAIR AVE E, TORONTO, ONTARIO, M4T 1N5
TEL : (416)362-7753

No.	REVISIONS	By	Date
14			
13			
12			
11			
10			
9			
8			
7			
6			
5			
4	SPA SUBMISSION #2	DGY	18:10:15
3	ISSUED FOR SPA	DGY	18:05:14
2	REVISED PER ARCH COMMENTS	DGY	18:05:03
1	ISSUED FOR TEAM COORDINATION	DGY	18:05:02

CROSSING TABLE

1	200Ø W/M 0.50m BELOW 900Ø STM 200Ø W/M 0.78m BELOW 75Ø F.M.
2	200Ø W/M 0.50m BELOW 750Ø STM 200Ø W/M 1.47m BELOW 250Ø SAN 75Ø F.M. 0.2m ABOVE 750Ø STM
3	50Ø W/M 0.58m BELOW 250Ø SAN

WATERMAIN SCHEDULE

	Station	Description	Finished Grade	Top of Watermain	As Built Watermain
A	0+000.00	EXISTING WATERMAIN	95.80	93.30	
	0+001.00	45° VERTICAL BEND	95.81	93.35	
	0+001.80	45° VERTICAL BEND	95.82	92.50	
	0+002.00	45° BEND	95.84	92.50	
	0+003.81	45° BEND	95.84	92.50	
	0+010.91	45° VERTICAL BEND	95.73	92.50	
	0+011.16	45° VERTICAL BEND	95.73	93.33	
	0+015.65	45° BEND	95.63	93.23	
	0+017.85	45° BEND	95.61	93.21	
	0+047.22	200Ø V&VB	95.62	93.22	
	0+049.84	45° BEND	95.66	93.26	
	0+052.04	45° BEND	95.69	93.29	
	0+061.94	45° BEND	95.77	92.72	
C	0+064.24	50Ø SERVICE TEE TO PAD C	95.80	93.06	
	0+066.53	45° BEND	95.82	93.40	
B	0+067.40	EXISTING WATERMAIN	95.83	93.43	
C	0+000.00	50Ø SERVICE TEE TO PAD C	95.80	93.06	
	0+023.50	50Ø V&VB	95.87	93.50	
D	0+027.91	SERVICE PAD C	96.08	93.65	

2018 05 01

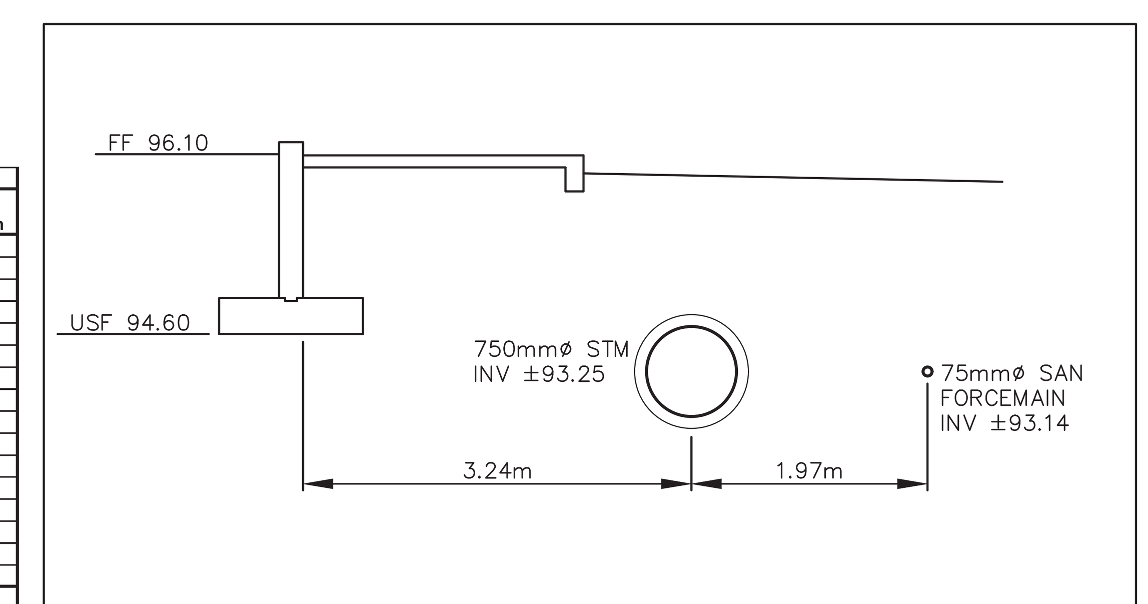

SECTION A–A
NTS

NorthAMERICAN DEVELOPMENT GROUP

IBI GROUP
400 – 333 Preston Street
Ottawa ON K1S 5N4 Canada
tel 613 225 1311 fax 613 225 9868
ibigroup.com

Project Title

PAD C BARHAVEN TOWN CENTRE

LICENSED PROFESSIONAL ENGINEER D. G. Yannoulopoulos 2018/10/15 PROVINCE OF ONTARIO

N

Drawing Title

SITE SERVICING PLAN
3777 STRANDHERD DRIVE

Scale	1:250
Design: R.M.	Date: APRIL 2018
Drawn: E.H.	Checked: D.G.Y.
Project No.: 116390	Drawing No.: C-001

D07-12-18-0106

#17717

J:\116390_PadCBarrh\5.9 Drawings\59civil\layouts\C-001 SERVICES.dwg Layout Name: C-001 SERVICES Plot Style: AIA STANDARD-FULL.CTB Plot Scale: 1:25.4 Plotted At: 10/17/2018 11:06 AM Last Saved By: EHENRIE Last Saved At: Oct. 15, 18