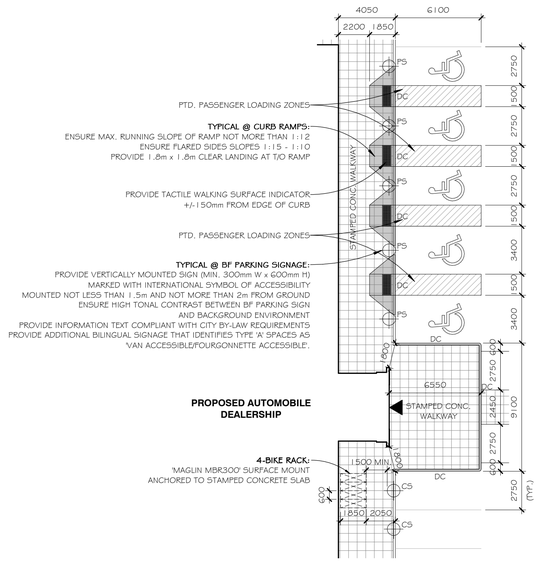

1 A100a PARKING DETAIL
SCALE 1 : 200

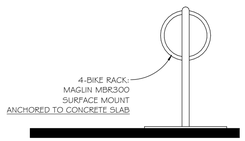

2 A100a BIKE RACK DETAIL
SCALE 1 : 20

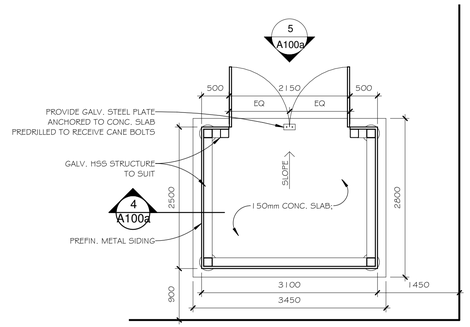

3 A100a GARBAGE ENCLOSURE PLAN
SCALE 1 : 50

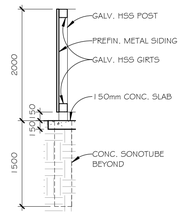

4 A100a GARBAGE ENCLOSURE SECTION
SCALE 1 : 50

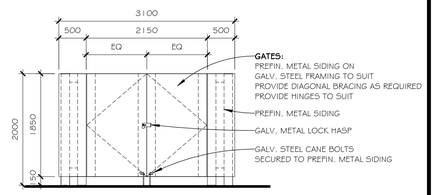

5 A100a GARBAGE ENCLOSURE ELEVATION
SCALE 1 : 50

REVISIONS:

No.	DATE	DESCRIPTION
0	04 SEP 2018	RESPONSE TO CITY COMMENTS

PERMIT	
TENDER	
CONSTRUCTION	

IT IS THE RESPONSIBILITY OF THE APPROPRIATE CONTRACTOR TO CHECK AND VERIFY ALL DIMENSIONS ON SITE AND REPORT ALL ERRORS AND/OR OMISSIONS TO THE ARCHITECT.
ALL CONTRACTORS MUST COMPLY WITH ALL PERTINENT CODES AND BY-LAWS.
DO NOT SCALE DRAWINGS.
THIS DRAWING MAY NOT BE USED FOR CONSTRUCTION UNTIL SIGNED BY THE ARCHITECT.
COPYRIGHT RESERVED. THIS DRAWING IS THE EXCLUSIVE PROPERTY OF KWC ARCHITECTS INC. AND SHALL NOT BE USED WITHOUT THE ARCHITECT'S CONSENT.

383 Parkdale Avenue, Suite 201
Ottawa Ontario Canada K1Y 4R4

KWC ARCHITECTS INC.

PHONE (613) 238-2117
FAX (613) 238-6595
E MAIL kwc@kwc-arch.com

NORTH

ARCHITECT'S/ENGINEER'S STAMP

BUILDING A REPUTATION ON EXCELLENCE

BBS CONTRUCTION (ONTARIO) LTD.
1805 WOODWARD DRIVE,
OTTAWA, ON K2C 0P9 CANADA
TEL.613-226-8830 FAX:613-226-7709

OWNER
2511286 ONTARIO INC.

PROJECT
PROPOSED AUTOMOBILE DEALERSHIP
'DAN MURPHY FORD'
555 DEALERSHIP DRIVE, OTTAWA, ON

DRAWING TITLE
SITE DETAILS

PROJECT No.	1840
SCALE	As indicated
DRAWN BY	TC
DATE	20 AUG 2018

DRAWING No. A100a

D07-12-18-0102

17720