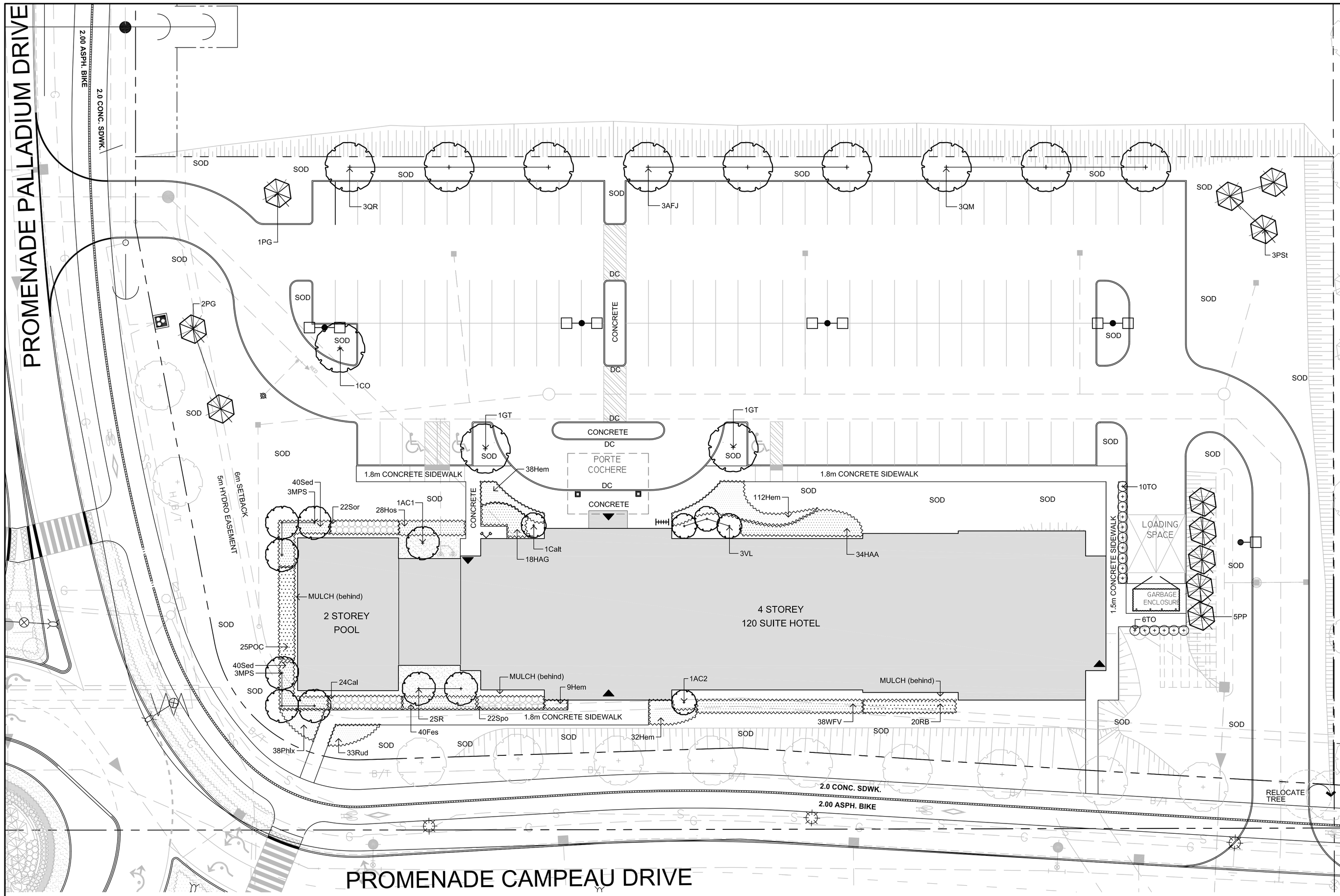

SCALE 1:250

0 5 10 15 20m

LEGEND / SYMBOL

- EXISTING TREE(S)
- PROPOSED DECIDUOUS TREE DETAIL 1/L1.01
- PROPOSED CONIFEROUS TREE DETAIL 1/L1.01
- PROPOSED DECIDUOUS SHRUBS AND PERENNIALS DETAIL 1/L1.01
- PROPOSED DECORATIVE AGGREGATE DETAIL 3/L1.01
- PROPOSED BICYCLE RACK 4-RING RACK BY MAGLIN DETAIL 2/L1.01

PLANT MATERIAL SCHEDULE

CODE	BOTANICAL NAME	COMMON NAME	QTY.	SIZE	REMARKS
DECIDUOUS TREES					
AC1	AMELANCHIER CANADENSIS	DOWNY SERVICEBERRY	1	50mm cal	B&B, single stem
AFJ	ACER x FREEMANII JEFFERSRED	AUTUMN BLAZE MAPLE	3	60mm cal	B&B, single stem
CO	CELTIS OCCIDENTALIS	COMMON HACKBERRY	1	60mm cal	B&B, single stem
GT	GLEDITSIA TRIACANTHOS SKYLINE	SKYLINE HONEYLOCUST	2	60mm cal	B&B, single stem
MPS	MALUS PINK SPIRES	PINK SPIRES CRABAPPLE	6	50mm cal	B&B, single stem
QM	QUERCUS MACROCARPA	BUR OAK	3	60mm cal	B&B, single stem
QR	QUERCUS RUBRA	RED OAK	3	60mm cal	B&B, single stem
SR	SYRINGA RETICULATA	JAPANESE TREE LILAC	2	50mm cal	B&B, single stem
CONIFEROUS TREES					
PG	PICEA GLAUCA	WHITE SPRUCE	3	180 cm ht	B&B
PP	PICEA PUNGENS	COLORADO GREEN SPRUCE	5	180 cm ht	B&B
PSt	PINUS STROBUS	WHITE PINE	3	180 cm ht	B&B
TO	THUJA OCCIDENTALIS	EASTERN WHITE CEDAR	16	150 cm ht	B&B,1200cm c/c
SHRUBS					
AC2	AMELANCHIER CANADENSIS	DOWNY SERVICEBERRY	1	150cm ht	B&B, multi-stem
CAlt	CORNUS ALTERNIFOLIA	PAGODA DOGWOOD	1	150cm ht.	B&B, multi-stem
HAA	HYDRANGEA ARBORESCENS ANNABELLE	ANNABELLE HYDRANGEA	34	50cm ht	potted, 100cm o/c
HAG	HYDRANGEA ARBORESCENS GRANDIFLORA	SNOWHILL HYDRANGEA	18	50cm ht	potted, 100cm o/c
POC	PHYSOCARPUS OPULIFOLIUS 'COPPERTINA'	COPPERTINA NINEBARK	24	50cm ht	potted, 100cm o/c
RB	ROSA BLANDA	SHRUB ROSE (rose-pink)	20	50cm ht	potted,100cm o/c
WFV	WEIGELA FLORIDA VARIEGATA	VARIEGATED WEIGELA	38	50cm ht	potted,100cm o/c
VL	VIBURNUM LENTAGO	NANNYBERRY	3	150cm ht	B&B, multi-stem
PERENNIALS					
Hem	HEMEROCALLIS 'Hyperion'	Hyperion DAYLILY	191	15 cm pot	plant 60cm o/c
Hos	HOSTA 'Great Expectations'	'Great Expectations' Hosta	28	15 cm pot	plant 75cm o/c
Phlx	PHLOX paniculata	SUMMER PHLOX	38	15 cm pot	plant 60cm o/c
Rud	RUDBECKIA hirta '	BROWN-EYED SUSAN	33	15 cm pot	plant 60cm o/c
Sed	SEDUM spectabilis 'Autumn Joy'	STONECROP	80	15 cm pot	plant 60cm o/c
ORNAMENTAL GRASSES					
Cal	CALAMAGROSTIS x acutiflora 'Karl Foerster'	KARL FOERSTER REED GRASS	24	15cm pot	plant 75cm o/c
Fes	FESTUCA amethystina 'Superba'	AMETHYST FESCUE	40	15 cm pot	plant 60cm o/c
Sor	SORGHASTRUM nutans	INDIAN GRASS	22	15cm pot	plant 75cm o/c
Spo	SPOROBOLUS heterolepis	PRAIRE DROPSEED	22	15cm pot	plant 75cm o/c

GENERAL NOTES

1. This drawing shall be read in conjunction with all relevant Architectural, Engineering and related Drawings and Documents.
2. Refer to Engineering Drawings for Grading and Servicing.
3. Refer to Architectural Drawings for Site layout.
4. Contractor shall provide the location(s) of all services/utilities by consulting Municipal Authorities and Utility companies and shall be responsible for adequate protection from damage during construction.
5. Plant material shall be No.1 Grade and shall comply with the Metric Guide Specifications For Nursery Stock (latest edition), published by the Canadian Nursery Trades Association.
6. Plant Material locations are **Schematic / Approximate only**. Contractor shall stake out locations on site prior to work.
7. Contractor shall guarantee all plant material for a period cf one (1) full year from the date of final acceptance.
8. **Shrubs** shall be planted in a continuous prepared bed of 450mm depth planting soil mix covered over with a woven polypropylene weed control fabric **(LANDSCAPE FABRIC-Green-Line by Thrace-LINQ)** and 75mm depth composted pine mulch to finish grade, as specified
9. **Perennials** and **Ornamental Grasses** shall be planted in a continuous prepared bed of 450mm depth planting soil mix covered over with 75mm depth composted pine mulch to finish grade.**(NO WEED CONTROL FABRIC)**, as specified
10. Sod areas to receive 125mm topsoil. Sod shall be No. 1 cuality conforming to the Canadian Nursery Sod Growers Specification.
11. Reinstate all areas damaged or disturbed beyond the limit of Work.
12. Plant Material substitutions shall not be permitted without written approval from the Consultant.
13. Contractor shall advise Consultant a minimum of **48hrs**. prior to proceeding landscape work and any required Field Reviews.
14. **THIS PLAN HAS BEEN PREPARED FOR MUNICIPAL SITE PLAN APPROVAL ONLY AND MAY NOT BE USED FOR ANY OTHER PURPOSE.**

NOT FOR CONSTRUCTION

no.	date	revision
1.	JUNE 5/18	PER CITY COMMENTS (1)
1.	MAR. 7/18	ISSUED FOR SITE PLAN APPROVAL

North Arrow

Stamp

ONTARIO ASSOCIATION OF LANDSCAPE ARCHITECTS — ROY J. LEVSTEK — OALA

Contractor shall check and verify all dimensions on site and report all errors and/or omissions to the Consultant.

Work to be done in accordance with all applicable codes and by-laws.

Do not scale Drawing.

Copyright reserved. This Drawing is the exclusive property of Levstek Consultants Inc. and shall not be used without consent.

Consultant

LEVSTEK CONSULTANTS
LANDSCAPE ARCHITECTS
5871 Hugh Crescent · Ottawa · Ontario · K0A 2W0
613 · 826 · 0518

Client

Project
WINGATE
BY WYNDHAM
8600 CAMPEAU DRIVE

Drawing Title
LANDSCAPE PLAN

Drawn	Date	Drawing No.
MGB	FEB 2018	L1.01
Scale 1:250	Project No. 1140	

D07-12-18-0034

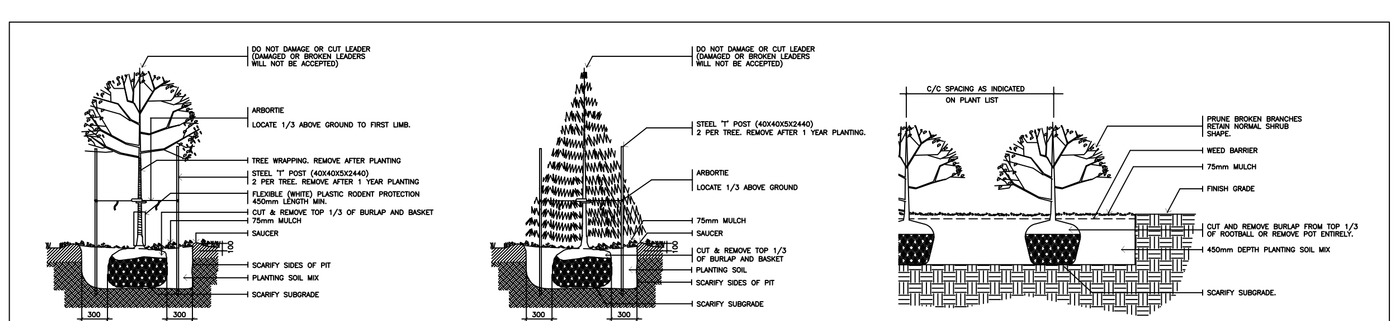

1 L1.01 PLANTING DETAILS (TYPICAL) NTS

MAGLIN™

MODEL:
☐ MBR300

FINISH:
☐ GRAPHITE (GLOSS)

NUMBER OF RINGS:
☐ 4

INSTALLATION:
☐ SURFACE MOUNT

MAGLIN SITE FURNITURE INC.
27 BYSHAM PARK DR.
WOODSTOCK, ON N4T 1P1
TOLL FREE: 1-800-716-5506
PHONE: (519) 539-6776
FAX: (877) 260-9393

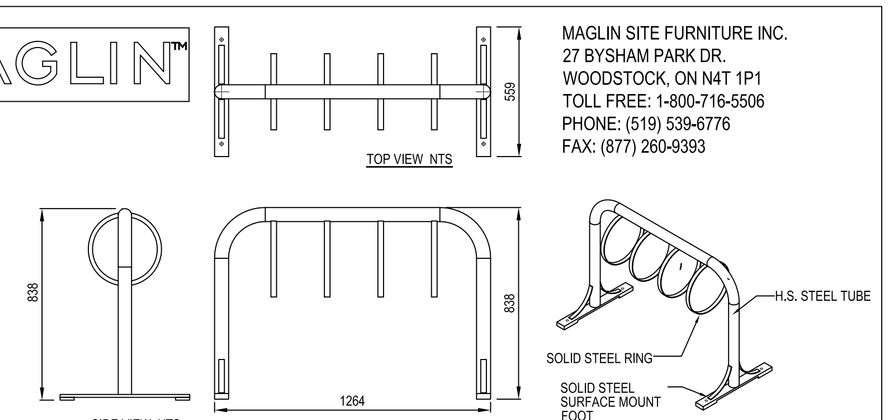

NOTES:
1. ALL PARTS TO BE SOLID STEEL FLAT BAR & H.S. STEEL TUBE.
2. ALL STEEL COMPONENTS TO BE PROTECTED WITH E-COAT RUST PROOFING.
3. INSTALLATION TO BE COMPLETED IN ACCORDANCE WITH MANUFACTURER'S SPECIFICATIONS.
4. DO NOT SCALE DRAWING.

2 L1.01 BICYCLE RACK - 4-RING NTS

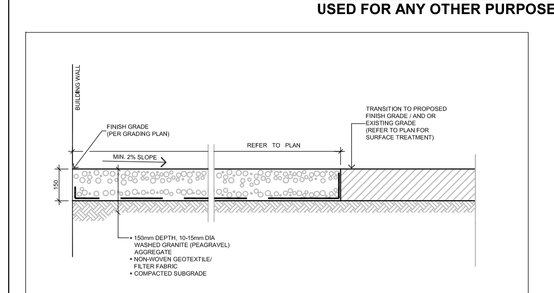

3 L1.01 DECORATIVE AGGREGATE NTS

APPROVED ☐ REFUSED ☐

THIS ____DAY OF _____, 20_____

DERRICK MOODIE, MANAGER
DEVELOPMENT REVIEW WEST
PLANNING, INFRASTRUCTURE AND ECONOMIC
DEVELOPMENT DEPARTMENT, CITY OF OTTAWA