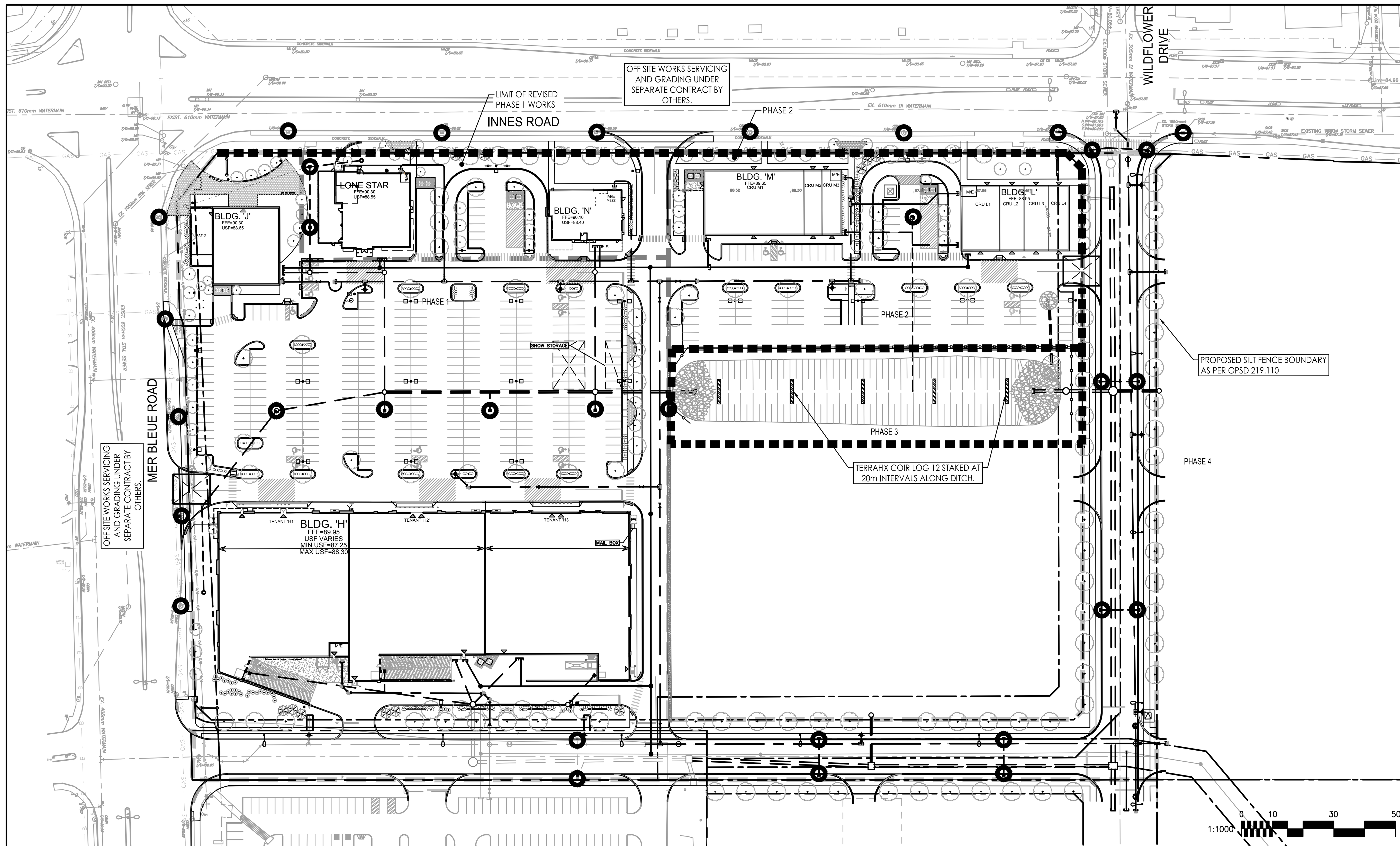

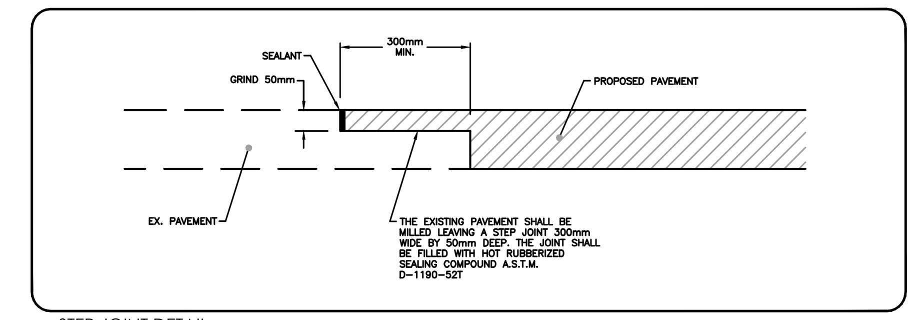

STEP JOINT DETAIL
SCALE: N.T.S.

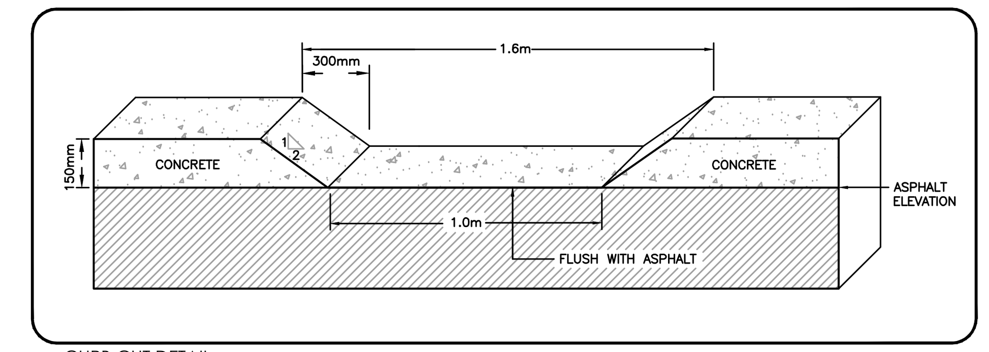

CURB CUT DETAIL
SCALE: N.T.S.

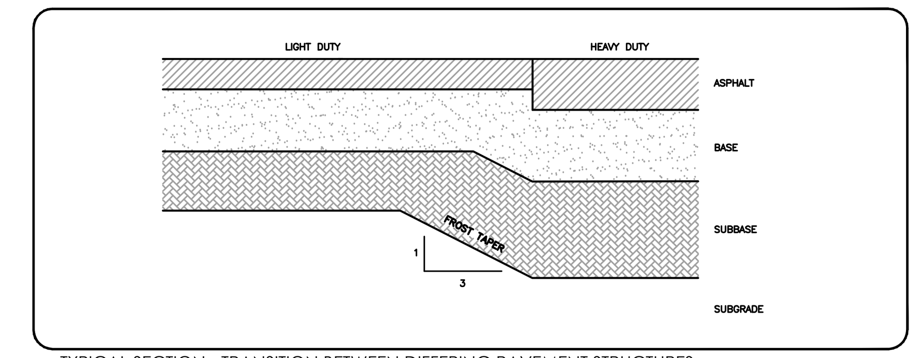

TYPICAL SECTION - TRANSITION BETWEEN DIFFERING PAVEMENT STRUCTURES
SCALE: N.T.S.

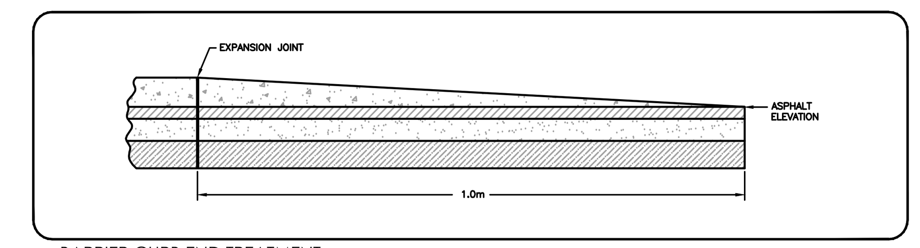

BARRIER CURB END TREATMENT
SCALE: N.T.S.

APPROVED ☐	REFUSED ☐

THIS ______ DAY OF ______________, 20 ____

JEFF MCEWEN, P.ENG, MANAGER
DEVELOPMENT REVIEW EAST,
PLANNING, INFRASTRUCTURE AND ECONOMIC
DEVELOPMENT DEPARTMENT, CITY OF OTTAWA

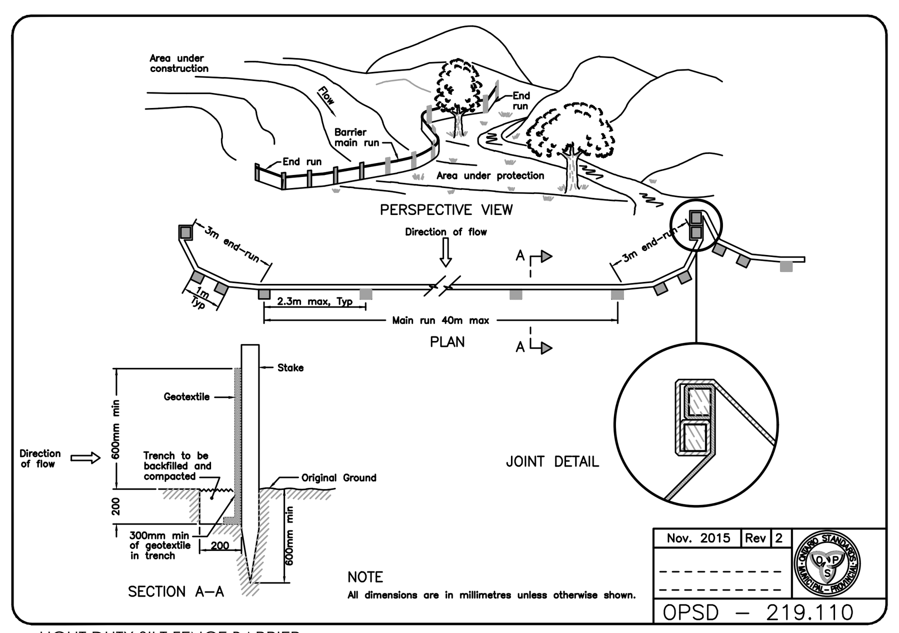

LIGHT DUTY SILT FENCE BARRIER
SCALE: N.T.S.

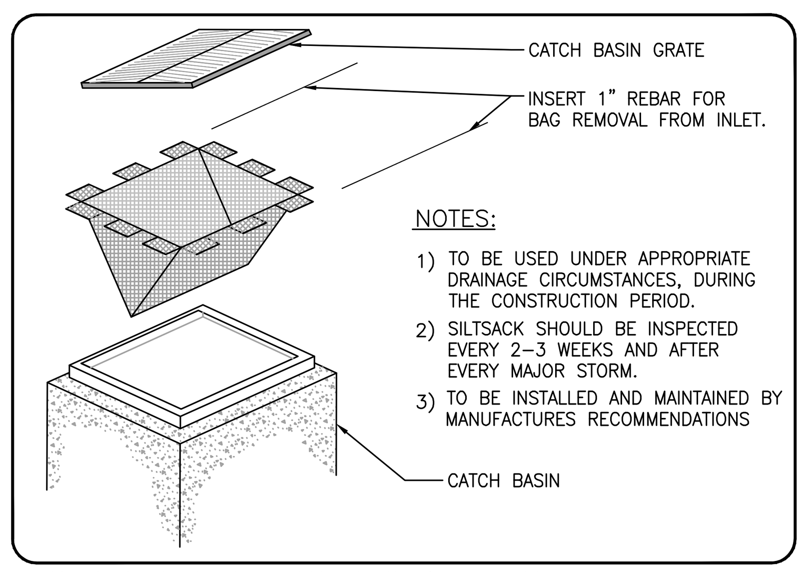

NOTES:

1) TO BE USED UNDER APPROPRIATE DRAINAGE CIRCUMSTANCES, DURING THE CONSTRUCTION PERIOD.
2) SILTSACK SHOULD BE INSPECTED EVERY 2–3 WEEKS AND AFTER EVERY MAJOR STORM.
3) TO BE INSTALLED AND MAINTAINED BY MANUFACTURES RECOMMENDATIONS

ROADSIDE CATCH BASIN PROTECTION DETAIL: TERRAFIX SILTSACK
SCALE: N.T.S.

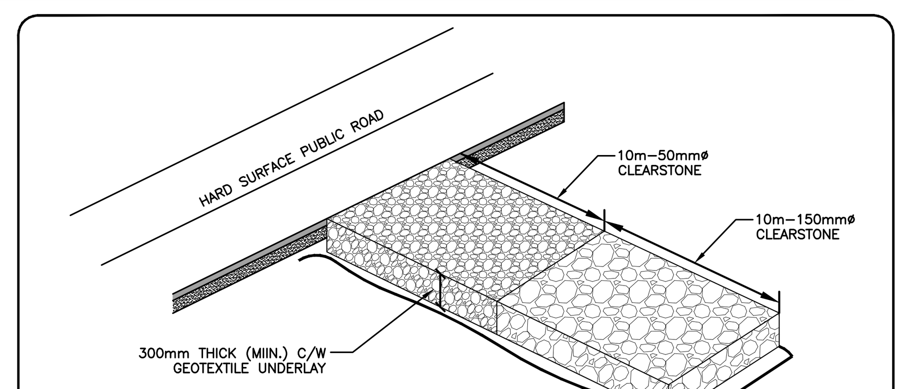

NOTES:

1. MUD MAT TO BE INSTALLED AT ALL CONSTRUCTION ENTRANCES
2. MUD MAT TO EXTEND FULL WIDTH OF ENTRANCE
3. IN THE CASE THAT THE ACCESS CROSSES A CULVERT OR DITCH, SEDIMENT FENCING SHOULD BE INSTALLED ALONG THE EDGES OF THE ACCESS TO PREVENT SEDIMENT FROM BEING WASHED AWAY WITH RUNOFF.
4. THE GRANULAR MATERIAL WILL REQUIRE PERIODIC REPLACEMENT AS IT BECOMES CONTAMINATED BY VEHICLE TRAFFIC.
5. SEDIMENT SHALL BE CLEANED FROM PUBLIC ROADS AT THE END OF EACH DAY.
6. STORM INLETS BOTH ON AND IN THE PROXIMITY OF THE SITE SHALL BE PROTECTED WITH INLET CONTROL MEASURES PRIOR TO ROAD CLEANING ACTIVITIES.

MUD MAT ENTRANCE DETAIL
SCALE: N.T.S.

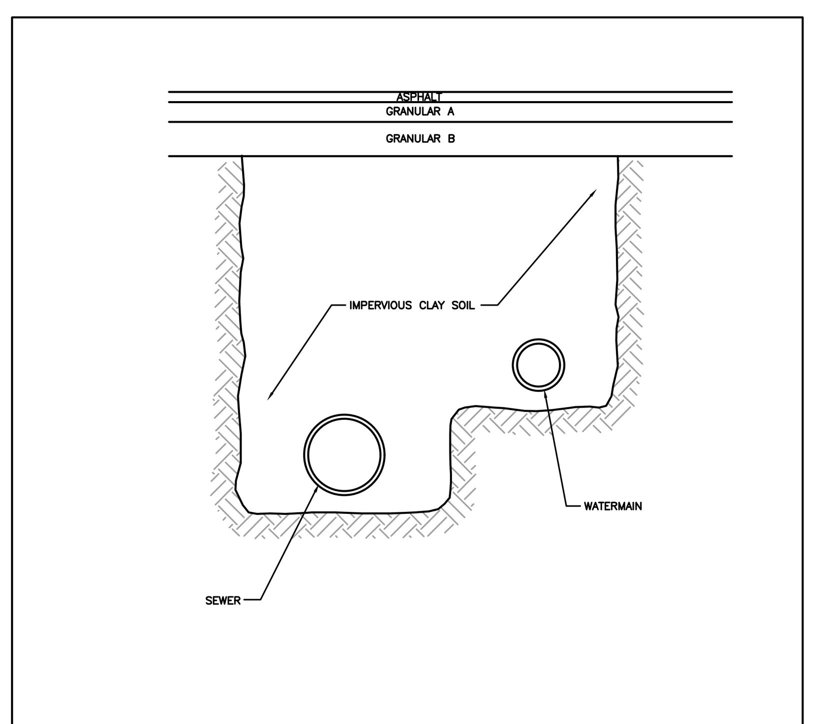

NOTES:

1. CLAY SEAL TO EXTEND FROM BOTTOM OF TRENCH EXCAVATION TO UNDERSIDE OF ROAD STRUCTURE.
2. CLAY SEAL TO EXTEND FULL TRENCH WIDTH TO EXISTING NATIVE SOILS WITH A MINIMUM THICKNESS OF 1.0m ALONG PIPES.
3. CLAY SEAL TO BE LOCATED SO THAT JOINTS ARE WITHIN THE CLAY SEAL MATERIAL.

Ottawa	CLAY SEAL FOR PIPE TRENCHES	DATE: MAY 2001 REV. DATE: MARCH 2006 DWG. No.: S8

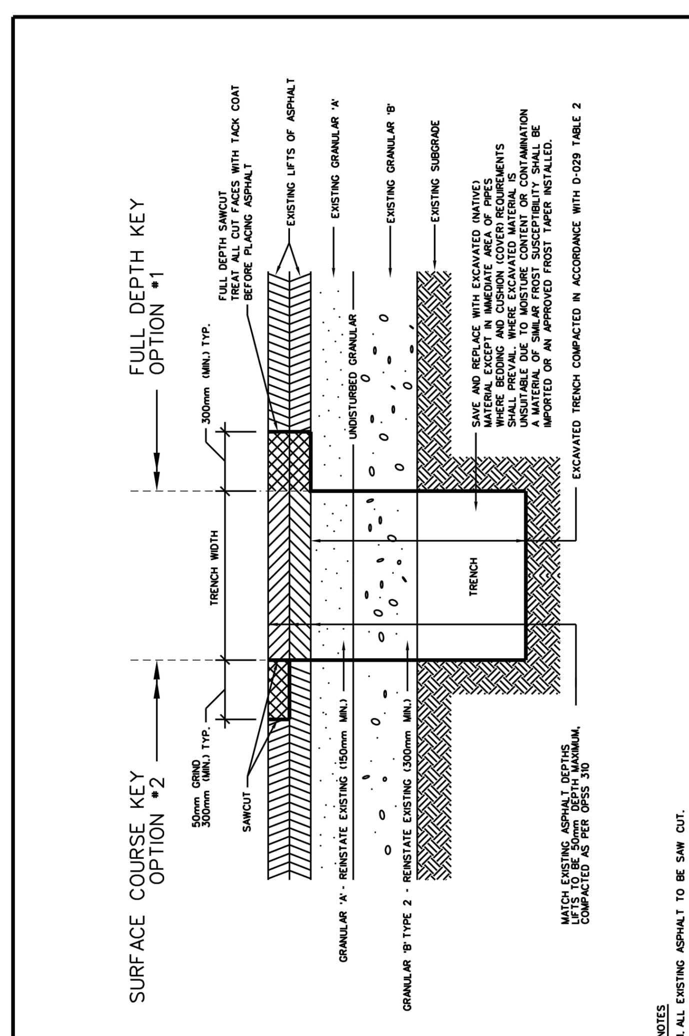

NOTES

1. ALL EXISTING ASPHALT TO BE SAW CUT.
2. UNLESS SPECIFIED ELSEWHERE, SURFACE COURSE ASPHALT SUPERPAVE 12.5mm LEVEL B (PG58-34) AND BASE COURSE ASPHALT SUPERPAVE 19.0mm LEVEL B (PG58-34) IS TO BE USED.
3. UNLESS SPECIFIED ELSEWHERE, WHERE EXISTING PAVEMENT STRUCTURE EXCEEDS 150mm IN DEPTH, ASPHALT REINSTATEMENT SHALL BE 150mm AND GRANULAR "A" FOR THE REMAINDER.
4. UNLESS SPECIFIED ELSEWHERE, WHERE AN UNDERLYING LAYER OF CONCRETE PAVEMENT EXISTS, REINSTATEMENT SHALL CONSIST OF 150mm OF SUPERPAVE 19.0mm LEVEL B (PG58-34) COMPACTED IN LIFTS.
5. UNLESS SPECIFIED ELSEWHERE, HOT MIX ASPHALT PLACEMENT AND CONSTRUCTION SHALL BE IN ACCORDANCE WITH F-3130.

Ottawa	STANDARD TRENCH REINSTATMENT IN PAVED SURFACE	DATE: MAY 2001 REV. DATE: MARCH 2017 DWG. No.: R10

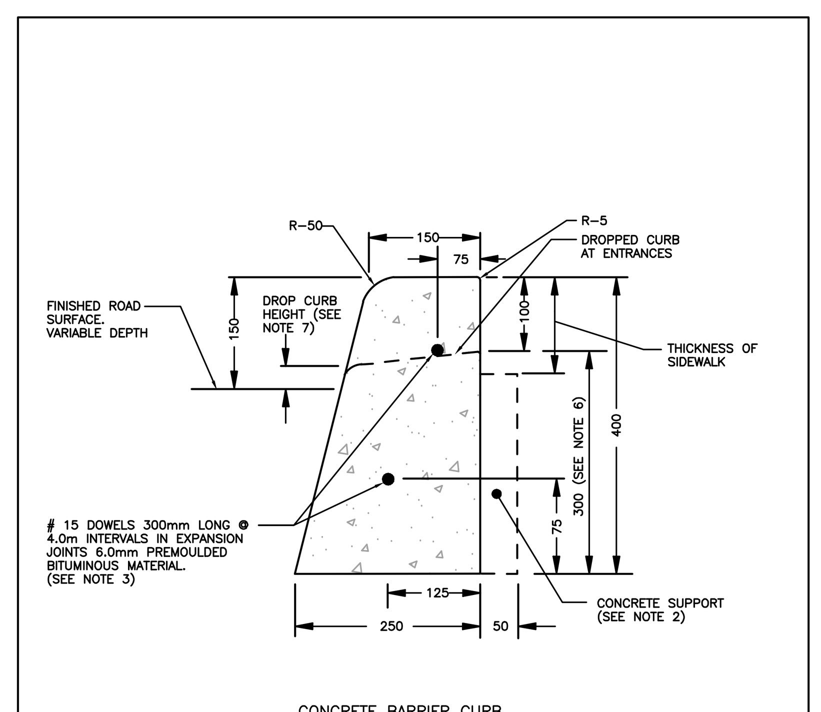

CONCRETE BARRIER CURB

NOTES:

1. THE FULL CURB DEPTH SHALL BE CARRIED THROUGH THE DEPRESSED ACCESS CROSSING.
2. A CONCRETE SUPPORT IS REQUIRED WHEN BUILT ADJACENT TO THE SIDEWALK
3. IF AN EXTRUSION CURBING MACHINE IS USED. THE EXPANSION BITUMINOUS MATERIAL AND THE #15 DOWELS ARE TO BE PLACED AT THE END OF THE EXTRUSION.
4. ALL DIMENSIONS ARE IN MILLIMETRES UNLESS SHOWN OTHERWISE.
5. DUMMY JOINTS SHALL BE 25mm DEEP, FRONT, BACK AND TOP OF SECTION AT 2m SPACING.
6. FOR DEPRESSED CURB AT ENTRANCES USE 250.
7. DEPRESSED CURB HEIGHT – FOR PEDESTRIAN CURB RAMPS 0 TO 6.0mm AND FOR PRIVATE ENTRANCES 0 TO 25mm.

N.T.S.

Ottawa	CONCRETE BARRIER CURB FOR GRANULAR BASE PAVEMENT (MODIFIED OPSD–600.110)	DATE: JANUARY 2003 REV. DATE: MARCH 2014 DWG. No.: SC1.1

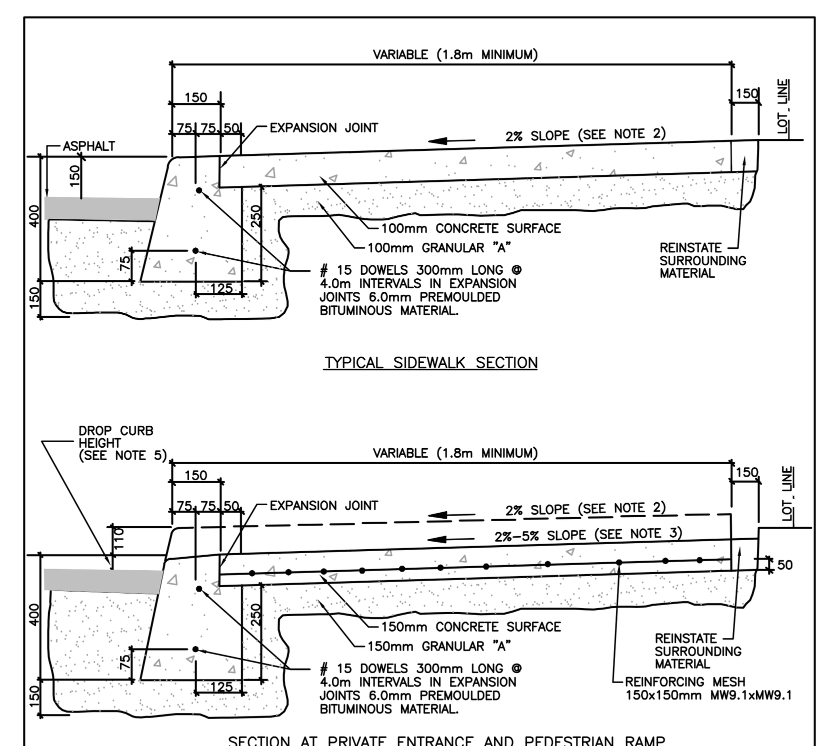

NOTES:

1. ALL DIMENSIONS ARE IN MILLIMETRES UNLESS SHOWN OTHERWISE.
2. THE MAXIMUM SLOPE IS NOT TO EXCEED 2%.
3. FOR CURB RAMPS, SLOPE OF 2.0% TO 5.0%, MAXIMUM 8%.
4. EXPANSION AND DUMMY JOINTS AS PER SC5.
5. DEPRESSED CURB HEIGHT – FOR PEDESTRIAN CURB RAMPS 0 TO 6mm AND FOR PRIVATE ENTRANCES 0 TO 25mm.

N.T.S.

Ottawa	CONCRETE BARRIER CURB WITH SIDEWALK	DATE: JANUARY 2003 REV. DATE: MARCH 2016 DWG. No.: SC1.4

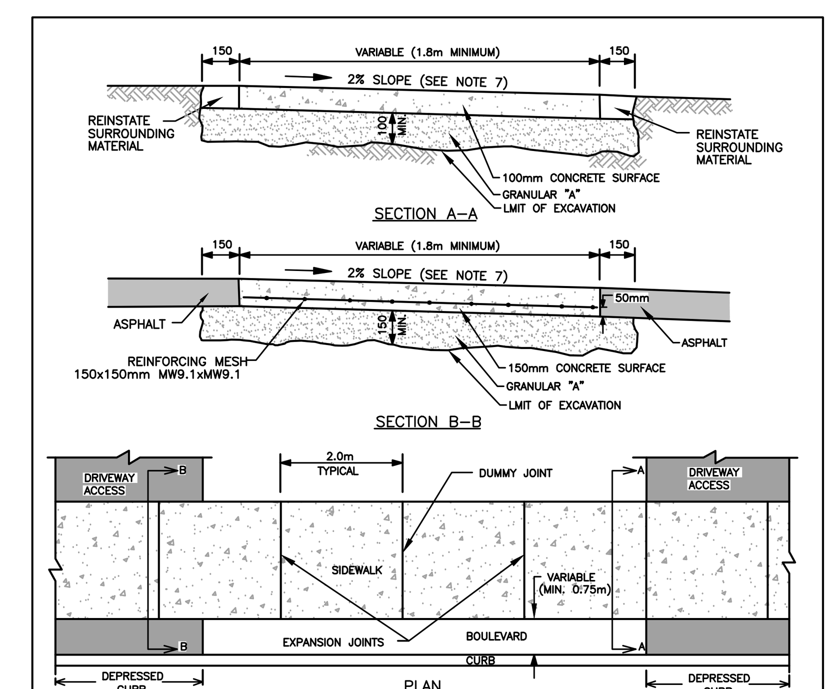

NOTES:

1. CONCRETE AND GRANULAR "A" IS TO BE INCREASED TO 150mm AT THE ENTRANCE AND 150x150mm MW9.1xMW9.1 REINFORCING MESH IS TO BE PLACED MID DEPTH WITHIN DRIVEWAY ACCESS.
2. TRANSVERSE EXPANSION JOINTS ARE REQUIRED AT THE ENDS, THE MIDPOINT, AT INTERVALS OF 4m MAX, AND ALSO TO ISOLATE OBSTRUCTIONS FROM SIDEWALK, HYDRANTS, POLES, BUILDINGS. ETC.
3. WHEN THE OVERALL SIDWALK WIDTH EXCEEDS 2.5m, A LONGITUDINAL CONSTRUCTION JOINT SHALL BE CREATED AT ITS MIDPOINT.
4. EDGES AND JOINTS ARE TO BE FINISHED WITH A 75mm EDGING TOOL.
5. ALL CONCRETE SIDEWALKS ARE TO HAVE A BROOM FINISH UNLESS OTHERWISD SPECIFIED.
6. ALL DIMENSIONS ARE IN MILLIMETRES UNLESS SHOWN OTHERWISE.
7. THE MAXIMUM SLOPE IS NOT TO EXCEED 2.0%
8. INSTALL DUMMY TRANSVERSE JOINTS AS REQUIRED SO THERE IS A MAXIMUM SPACING OF 2m BETWEEN ALL JOINTS.
9. SIDEWALK NOT TO BE DEPRESSED ACROSS DRIVEWAY ACCESSES.
10. EXPANSION AND DUMMY JOINTS AS PER SC5

Ottawa	TYPICAL CONCRETE SIDEWALK IN BOULEVARD	DATE: MAY 2001 REV. DATE: MARCH 2016 DWG. No.: SC4

Stantec

Stantec Consulting Ltd.
400 - 1331 Clyde Avenue
Ottawa ON
Tel. 613.722.4420
www.stantec.com

Copyright Reserved

The Contractor shall verify and be responsible for all dimensions. DO NOT scale the drawing - any errors or omissions shall be reported to Stantec without delay.
The Copyrights to all designs and drawings are the property of Stantec. Reproduction or use for any purpose other than that authorized by Stantec is forbidden.

Legend

- PROPOSED SILT FENCE BOUNDARY AS PER OPSD 219.110
- PROPOSED MUD MAT LOCATION
- PROPOSED CATCH BASIN PROTECTION AS PER DETAIL.
- PROPOSED TERRAFIX COIR LOG 12

Notes

Best Management Practices

CONTRACTOR TO PROVIDE EROSION AND SEDIMENT CONTROLS (BEST MANAGEMENT PRACTICES) DURING CONSTRUCTION OF THIS PROJECT.

EROSION MUST BE MINIMIZED AND SEDIMENTS MUST BE REMOVED FROM CONSTRUCTION SITE RUN-OFF IN ORDER TO PROTECT DOWNSTREAM AREAS. DURING ALL CONSTRUCTION, EROSION AND SEDIMENTATION SHOULD BE CONTROLLED BY THE FOLLOWING TECHNIQUES:

1. LIMIT THE EXTENT OF EXPOSED SOILS AT ANY GIVEN TIME.
2. REVEGETATE EXPOSED AREAS AND SLOPES AS SOON AS POSSIBLE.
3. MINIMIZE AREA TO BE CLEARED AND GRUBBED.
4. PROTECT EXPOSED SLOPES WITH PLASTIC OR SYNTHETIC MULCHES.
5. INSTALL CATCH BASIN INSERTS OR EQUIVALENT IN ALL PROPOSED CATCH BASINS AND CATCH BASIN MANHOLES AND IN ALL EXISTING CATCH BASINS THAT WILL RECEIVE RUN-OFF FROM THE SITE.
6. A SILT FENCE SHALL BE INSTALLED AROUND THE PERIMETER OF ALL AND ANY STOCKPILES OF MATERIAL TO BE USED OR REMOVED FROM SITE. (LOCATION TO BE DETERMINED)
7. A VISUAL INSPECTION SHALL BE DONE DAILY ON SEDIMENT CONTROL MEASURES AND CLEANED OF ANY ACCUMULATED SILT AS REQUIRED. THE DEPOSITS WILL BE DISPOSED OFF SITE AS PER THE REQUIREMENTS OF THE CONTRACT.
8. SEDIMENT CONTROL BARRIERS MAY ONLY BE REMOVED TEMPORARILY WITH APPROVAL OF CONTRACT ADMINISTRATOR TO ACCOMMODATE CONSTRUCTION OPERATIONS. ALL AFFECTED BARRIERS MUST BE REINSTATED AT NIGHT WHEN CONSTRUCTION IS COMPLETED. NO REMOVAL WILL OCCUR IF THERE IS A SIGNIFICANT RAINFALL EVENT ANTICIPATED (>10mm) UNLESS A NEW DEVICE HAS BEEN INSTALLED TO PROTECT EXISTING STORM AND SANITARY SEWER SYSTEMS, OR DOWNSTREAM WATERCOURSES.
9. NO REFUELING OR CLEANING OF EQUIPMENT IS PERMITTED NEAR ANY EXISTING WATERWAY.
10. CONTRACTOR SHALL REMOVE SEDIMENT CONTROL MEASURES WHEN, IN THE OPINION OF THE CONTRACT ADMINISTRATOR, THE MEASURE(S) IS NO LONGER REQUIRED. NO CONTROL MEASURES SHALL BE PERMANENTLEY REMOVED WITHOUT PRIOR WRITTEN AUTHORIZATION FROM THE CONTRACT ADMINISTRATOR.
11. THE CONTRACTOR SHALL PERIODICALLY, OR WHEN REQUESTED BY THE CONTRACT ADMINISTRATOR, CLEAN OUT ACCUMULATED SEDIMENTS AS REQUIRED.
12. THE CONTRACTOR SHALL IMMEDIATELY REPORT TO THE ENGINEER ANY ACCIDENTAL DISCHARGES OF SEDIMENT MATERIAL INTO THE WATERCOURSE. APPROPRIATE RESPONSE MEASURES, INCLUDING ANY REPAIRS TO EXISTING CONTROL MEASURES OR THE IMPLEMENTATION OF ADDITIONAL CONTROL MEASURES, SHALL BE CARRIED OUT BY THE CONTRACTOR WITHOUT DELAY.
13. CONTRACTOR SHALL INSTALL MUD MATS AT BOTH ENTRANCES TO THE SITE.
14. STORMWATER SWALES TO BE COVERED WITH HYDRO-SEED AND MULCH.

		By	Appd.	YY.MM.DD
13	REVISED AS PER CITY COMMENTS	MJS	KS	18.04.03
12	ISSUED FOR TENDER	MJS	DT	18.03.26
11	REVISED AS PER CITY COMMENTS	WAJ	DT	18.03.08
10	ISSUED FOR SPA	MJS	DT	17.10.20
9	ISSUED FOR ADDENDUM # 3	MJS	GR	17.05.04
8	ISSUED FOR ADDENDUM # 1	MJS	GR	17.04.28
7	ISSUED FOR TENDER	MJS	GR	17.04.12
6	ISSUED FOR TENDER	MJS	GR	17.03.29
5	REVISED AS PER CITY COMMENTS	MJS	DT	17.03.28
4	REVISED AS PER CITY COMMENTS	MJS	DT	17.01.03
3	REVISED SERVICING BLDG H3	MJS	DT	17.01.03
2	REVISED AS PER CITY COMMENTS	MJS	DT	16.12.07
1	ISSUED FOR SPA	MJS	DT	16.07.27

Revision

File Name: 160401242 DB	MJS	DT	MJS	16.06.30
	Dwn.	Chkd.	Dsgn.	YY.MM.DD

Permit-Seal

Client/Project
SMARTREIT

ORLEANS II DEVELOPMENT
2025 MER BLEUE ROAD
OTTAWA, ON, CANADA

Title
EROSION CONTROL AND DETAIL SHEETS
PHASE 2

Project No.	Scale	
160401242		
Drawing No.	Sheet	Revision
EC/DS-1	4 of 7	13

D07-12-17-0142
17241

V:\01-604\active\160401242_Orleans II\design\drawing\160401242 DB.dwg
2018/04/03 1:42 PM By: Sharp, Mike

ORIGINAL SHEET - ARCH D