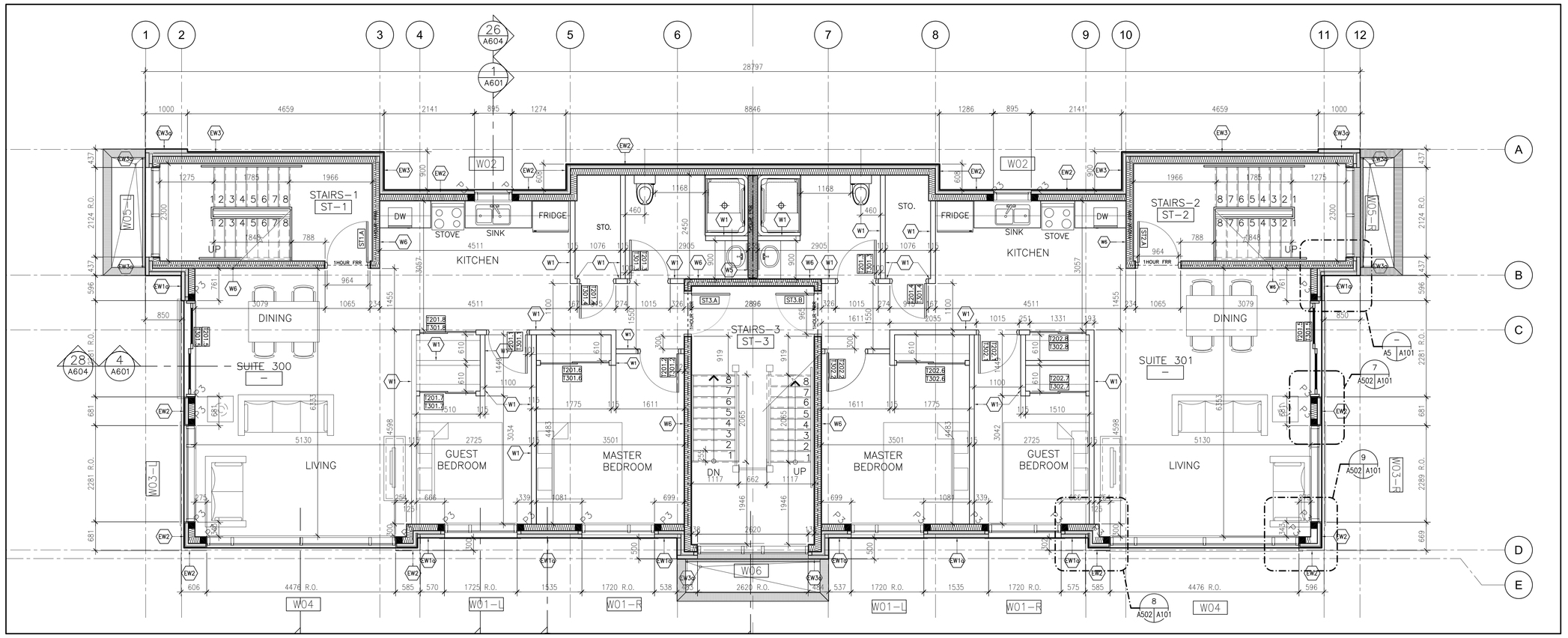

1 / A102 2ND TO 3RD FLOOR PLAN
SCALE: 1:50

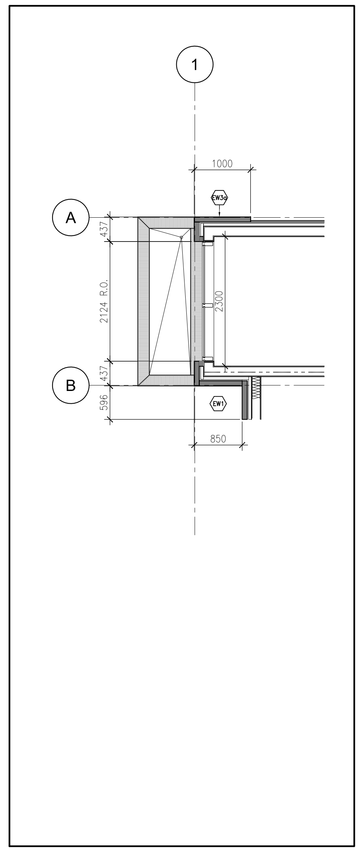

1 / A100 CANOPY AT STAIR-1
SCALE: 1:50

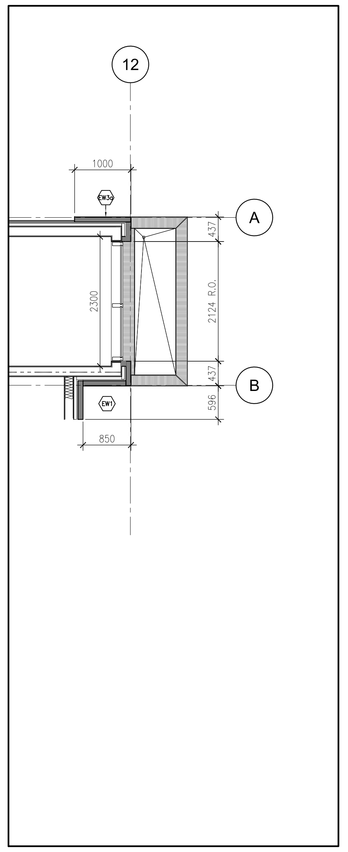

1 / A100 CANOPY AT STAIR-2
SCALE: 1:50

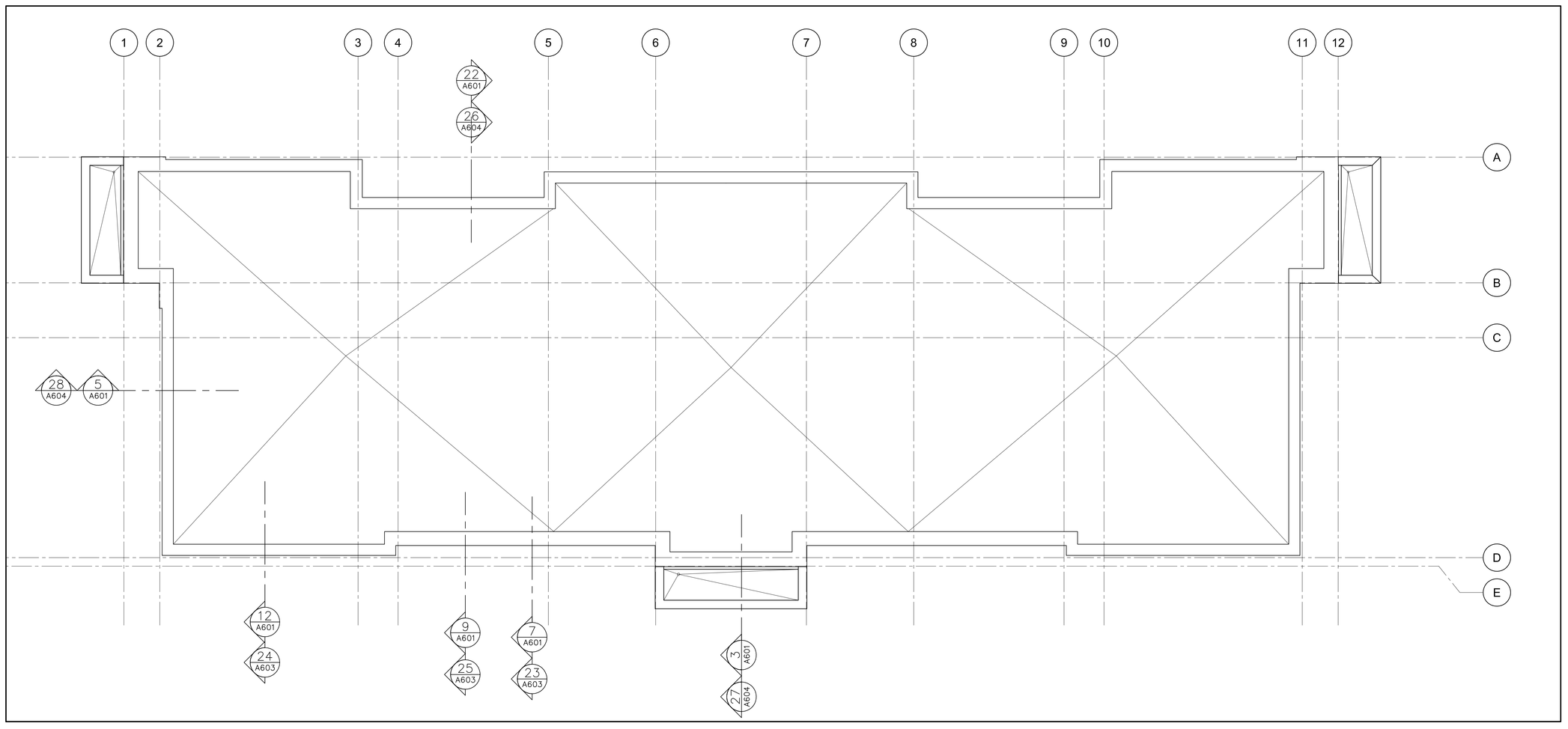

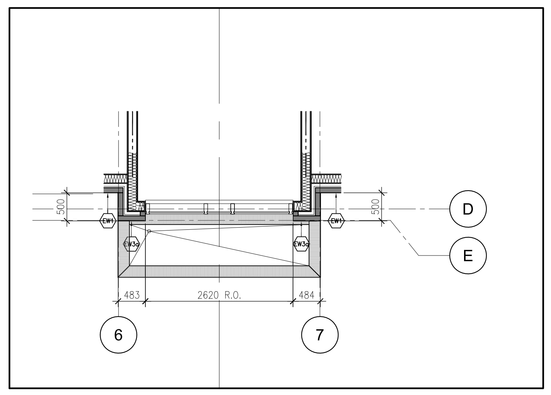

1 / A100 CANOPY AT STAIR-3
SCALE: 1:50

GENERAL NOTES:

THIS DRAWINGS MUST NOT BE SCALE.

ANY REVISIONS TO THE DOCUMENTS OR CHANGES PRIOR TO, DURING, OR AFTER CONSTRUCTION MUST BE DONE WITH WRITTEN AUTHORIZATION FROM VINCENT COLIZZA ARCHITECT INC.

THIS DRAWING, IN ALL FORMS, ELECTRONIC OR HAND COPY IS THE EXCLUSIVE PROPERTY OF VINCENT COLIZZA ARCHITECT INC. AND MUST NOT BE REPRODUCED WITHOUT WRITTEN PERMISSION.

No.	DESCRIPTION	DATE	CHD
2	ISSUED FOR SITE PLAN APPLICATION	2017/11/16	VCP
1	ISSUED FOR CITY OF OTTAWA PRELIMINARY REVIEW	2017/06/26	VCP

REVISIONS

CONTRACTOR SHALL CHECK AND VERIFY ALL DIMENSIONS AND REPORT ANY OMMISSIONS OR DISCREPANCIES TO THE ARCHITECT BEFORE PROCEEDING WITH THE WORK.

DO NOT SCALE THE DRAWINGS

THIS DRAWING SHALL NOT BE USED FOR CONSTRUCTION PURPOSES UNTIL SIGNED BY THE ARCHITECT.

DATE 2017-06-26

DRAWN JV

DATE 2017-06-26

CHECKED

DATE PRINTED

VINCENT P. COLIZZA ARCHITECT INCORPORATED

603 CUMMINGS AVE.

DWG. TITLE
BASEMENT FLOOR PLAN
FIRST FLOOR PLAN

SCALE 1:50

PROJ. NO. 1217

DWG. NO. A102