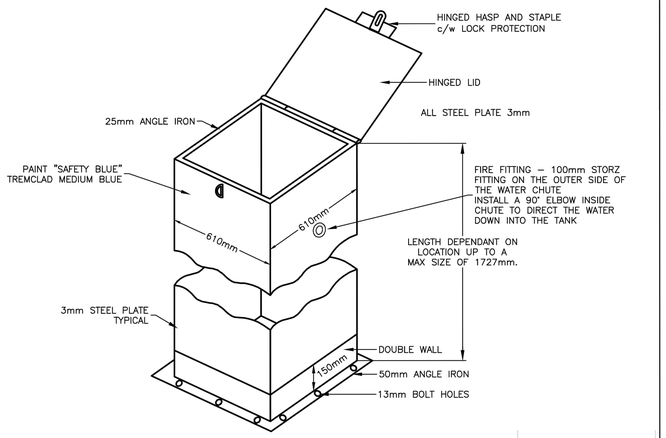

No.	DATE	BY	REVISIONS
1	21/06/11		REVISED PER CITY

DESIGNED –
DRAWN JMS
CHECKED NC
APPROVED NC
SCALE: NTS

CITY OF OTTAWA WATER FILL STATIONS

WATER CHUTE

DATE OCT. 2004
PROJECT
PLOTTED OCT. 2004

FIGURE 1

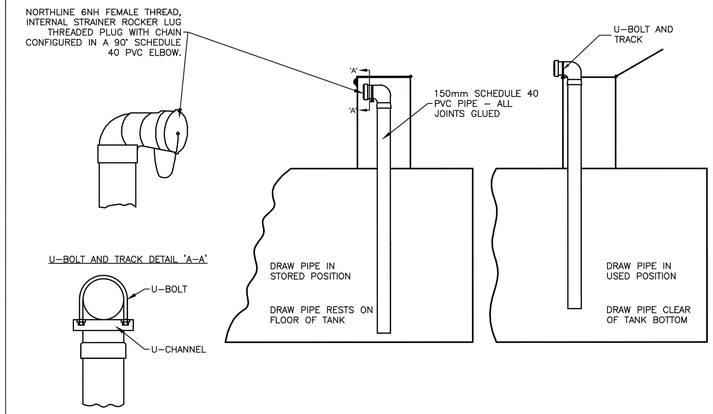

No.	DATE	BY	REVISIONS
1	21/06/11		REVISED PER CITY

DESIGNED –
DRAWN JMS
CHECKED NC
APPROVED NC
SCALE: NTS

CITY OF OTTAWA WATER FILL STATIONS

UNDERGROUND WATER RESERVOIR DRAW PIPE DETAIL

DATE OCT. 2004
PROJECT
PLOTTED OCT. 2004

FIGURE 4

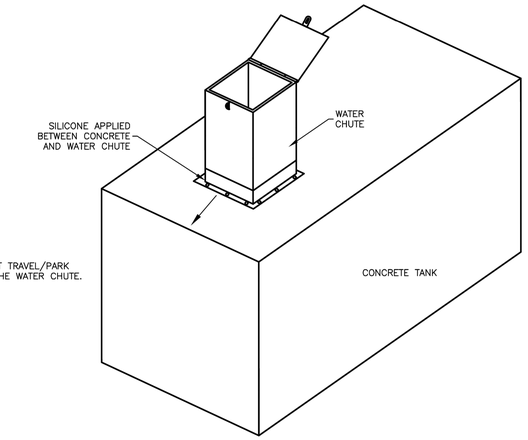

No.	DATE	BY	REVISIONS
1	21/06/11		REVISED PER CITY

DESIGNED –
DRAWN JMS
CHECKED NC
APPROVED NC
SCALE: NTS

CITY OF OTTAWA WATER FILL STATIONS

TYPICAL INSTALLATION OF WATER CHUTE ON A CONCRETE TANK

DATE OCT. 2004
PROJECT
PLOTTED OCT. 2004

FIGURE 10

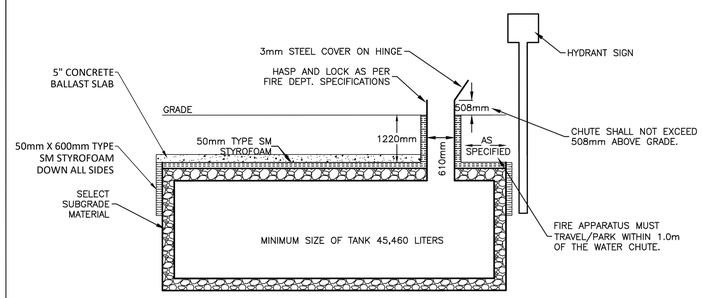

No.	DATE	BY	REVISIONS
1	21/06/11		REVISED PER CITY

DESIGNED –
DRAWN JMS
CHECKED NC
APPROVED NC
SCALE: NTS

CITY OF OTTAWA WATER FILL STATIONS

CONCRETE RESERVOIR

DATE OCT. 2004
PROJECT
PLOTTED OCT. 2004

FIGURE 5

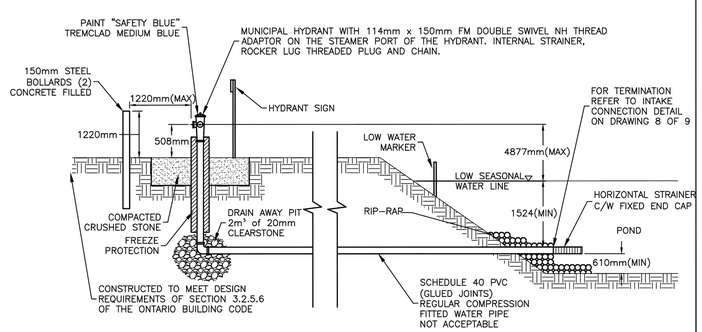

NOTE:
1. THESE ARE TYPICAL SPECIFICATIONS LOCAL CONDITIONS MAY REQUIRE DEVIATION ANY DEVIATIONS MUST BE APPROVED.

No.	DATE	BY	REVISIONS
1	21/06/11		REVISED PER CITY

DESIGNED –
DRAWN JMS
CHECKED NC
APPROVED NC
SCALE: NTS

CITY OF OTTAWA WATER FILL STATIONS

TYPICAL DRY HYDRANT INSTALLATION

DATE OCT. 2004
PROJECT
PLOTTED OCT. 2004

FIGURE 8

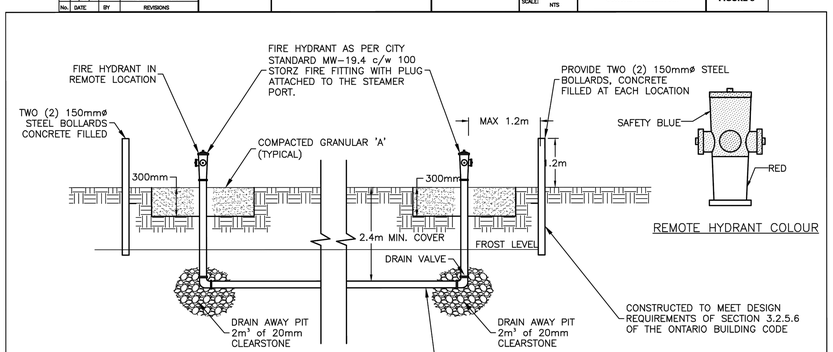

NOTE:

–THESE ARE TYPICAL SPECIFICATIONS. LOCAL CONDITIONS MAY REQUIRE DEVIATION. ANY DEVIATIONS MUST BE APPROVED.

– SYSTEM TO BE DESIGNED TO DELIVER 1000 GPM (4500 L/min.) AT THE FURTHEST HYDRANT.

No.	DATE	BY	REVISIONS
1	21/06/11		REVISED PER CITY

DESIGNED –
DRAWN GJR
CHECKED BMT
APPROVED JM
SCALE: NTS

CITY OF OTTAWA WATER FILL STATIONS

TYPICAL REMOTE FIRE PROTECTION SUPPLY MAIN C/W HYDRANTS

DATE NOV. 2006
PROJECT
PLOTTED NOV. 2006

FIGURE 12

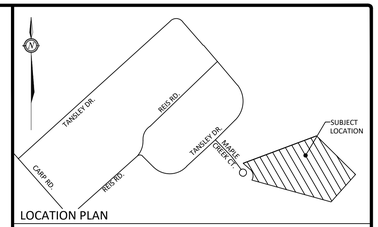

LOCATION PLAN

LEGEND

	BARRIER CURB
	CURB DEPRESSION
	HEAVY DUTY ASPHALT
	CONCRETE RAMP AND/OR WALKWAY
	SWALE CENTERLINE
	TERRACING @ 3:1 SLOPE UNLESS SPECIFIED
LSCB	LANDSCAPE CATCH BASIN
CBMH	CATCH BASIN MANHOLE
CB DICB	CATCH BASIN OR DITCH INLET
MH1A	SANITARY MANHOLE
73.21	TYPICAL GRADE
×73.21 B/W	BOTTOM OF WALL GRADE
×73.21(S)	SWALE GRADE
T/G 73.21	TOP OF GRATE GRADE
×EX.73.21	EXISTING GRADE (NOT SHOWN ON SURVEY)
	OVERLAND FLOW ROUTE
	100yr PONDING
	5yr PONDING
× 76.16	GRADE MARKER
	SILT FENCE

No.	Revision/Issue	Date
01	ISSUED FOR SITE PLAN CONTROL	JAN 20, 2017

Check and verify all dimensions before proceeding with the work

Do not scale drawings

SCALE 1 : 300

0 5 10 15 20 25 30 Metres

McINTOSH PERRY
115 Walgreen Road R.R. #3, Carp, ON K0A 1L0
Tel: 613-836-2184 Fax: 613-836-3742

Stamp:

Client:
BBS CONSTRUCTION (ONTARIO) LTD.
1805 WOODWARD DRIVE
OTTAWA ON, K2C 0P9
P: 613-226-8830
F: 613-226-7709

Project:
210/220 MAPLE CREEK COURT
WALL SOUND
PROPOSED WAREHOUSE DEVELOPMENT
OTTAWA ONTARIO

Drawing Title:
UNDERGROUND FIRE TANK DETAILS

Scale:	1:500
Drawn by:	CDH
Checked By:	RPK/CJM
Designed By:	JMJ
Date:	NOV 25, 2016
Project Number:	CP-15-0429
Drawing Number:	SHEET 3of 3 C103

FILENAME: \\192.168.1.20\projectdocuments\10 Projects - Proposals\2015 Jobs\CP\0CP-15-0429 BBS_Site Plan_210 Maple Creek Court\Civil\15 - Drawings\0CP-15-0429 - PRESENTATION.dwg
LAST SAVED: Friday, January 20, 2017 LAST SAVED BY: jointer
LAST PLOTTED: Friday, January 20, 2017 CTB FILE USED: ---