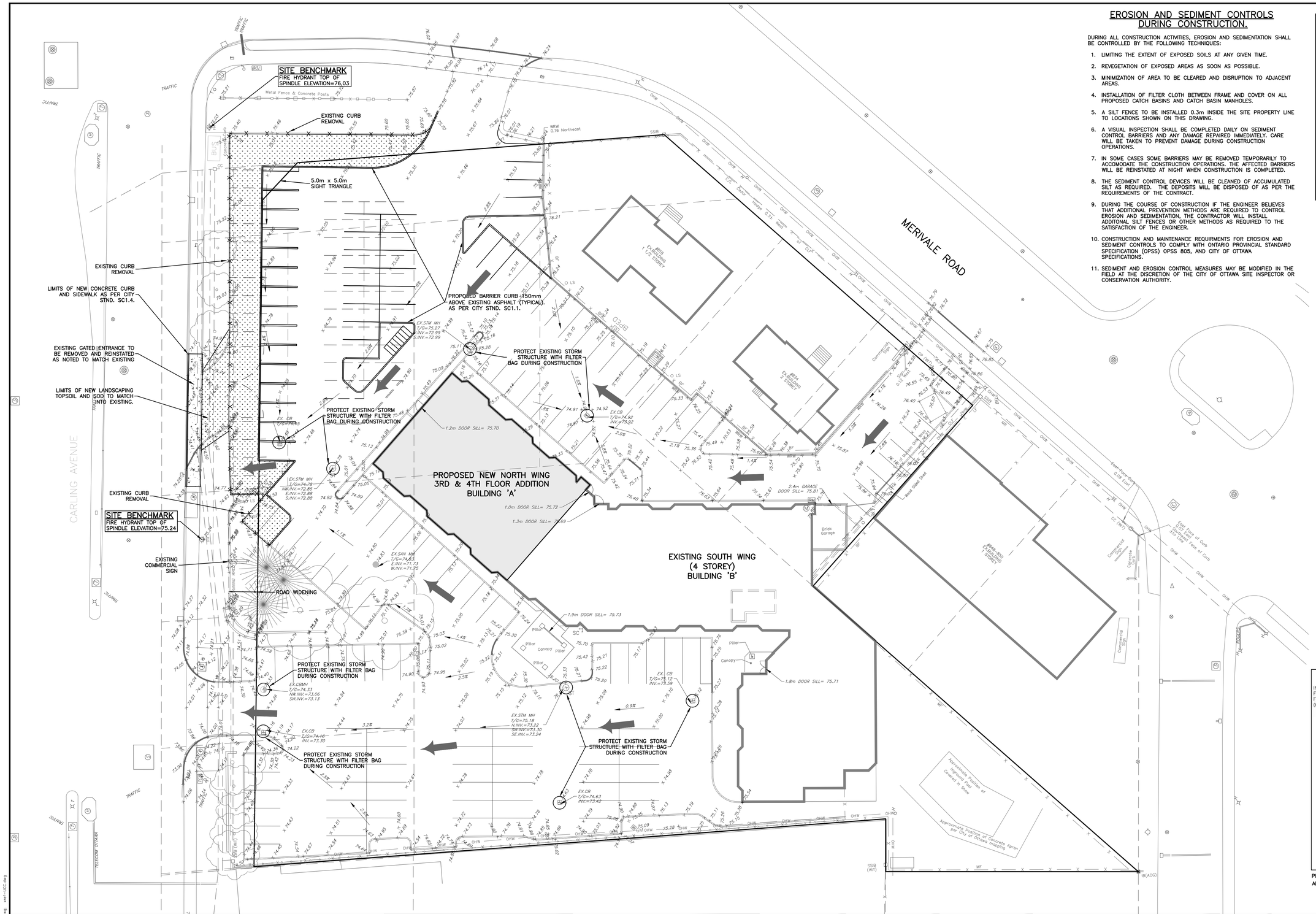

EROSION AND SEDIMENT CONTROLS DURING CONSTRUCTION.

DURING ALL CONSTRUCTION ACTIVITIES, EROSION AND SEDIMENTATION SHALL BE CONTROLLED BY THE FOLLOWING TECHNIQUES:

1. LIMITING THE EXTENT OF EXPOSED SOILS AT ANY GIVEN TIME.
2. REVEGETATION OF EXPOSED AREAS AS SOON AS POSSIBLE.
3. MINIMIZATION OF AREA TO BE CLEARED AND DISRUPTION TO ADJACENT AREAS.
4. INSTALLATION OF FILTER CLOTH BETWEEN FRAME AND COVER ON ALL PROPOSED CATCH BASINS AND CATCH BASIN MANHOLES.
5. A SILT FENCE TO BE INSTALLED 0.3m INSIDE THE SITE PROPERTY LINE TO LOCATIONS SHOWN ON THIS DRAWING.
6. A VISUAL INSPECTION SHALL BE COMPLETED DAILY ON SEDIMENT CONTROL BARRIERS AND ANY DAMAGE REPAIRED IMMEDIATELY. CARE WILL BE TAKEN TO PREVENT DAMAGE DURING CONSTRUCTION OPERATIONS.
7. IN SOME CASES SOME BARRIERS MAY BE REMOVED TEMPORARILY TO ACCOMODATE THE CONSTRUCTION OPERATIONS. THE AFFECTED BARRIERS WILL BE REINSTATED AT NIGHT WHEN CONSTRUCTION IS COMPLETED.
8. THE SEDIMENT CONTROL DEVICES WILL BE CLEANED OF ACCUMULATED SILT AS REQUIRED. THE DEPOSITS WILL BE DISPOSED OF AS PER THE REQUIREMENTS OF THE CONTRACT.
9. DURING THE COURSE OF CONSTRUCTION IF THE ENGINEER BELIEVES THAT ADDITIONAL PREVENTION METHODS ARE REQUIRED TO CONTROL EROSION AND SEDIMENTATION, THE CONTRACTOR WILL INSTALL ADDITONAL SILT FENCES OR OTHER METHODS AS REQUIRED TO THE SATISFACTION OF THE ENGINEER.
10. CONSTRUCTION AND MAINTENANCE REQUIRMENTS FOR EROSION AND SEDIMENT CONTROLS TO COMPLY WITH ONTARIO PROVINCIAL STANDARD SPECIFICATION (OPSS) OPSS 805, AND CITY OF OTTAWA SPECIFICATIONS.
11. SEDIMENT AND EROSION CONTROL MEASURES MAY BE MODIFIED IN THE FIELD AT THE DISCRETION OF THE CITY OF OTTAWA SITE INSPECTOR OR CONSERVATION AUTHORITY.

KEY PLAN

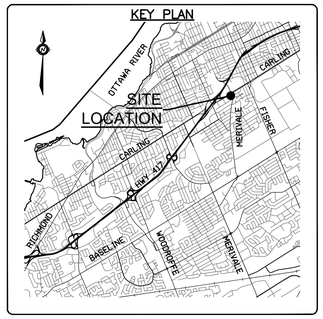

EXISTING LEGEND

	Survey Monument Planted
	Survey Monument Found
SIB	Standard Iron Bar
SSIB	Short Standard Iron Bar
IB	Iron Bar
IB*	Iron Bar (0.3 Long)
RP	Rock Post
CC	Cut Cross
CP	Concrete Pin
Meas.	Measured
(WIT)	Witness
(AOG)	Annis, O'Sullivan, Vollebekk Ltd.
LF	Lettice Fence
MF	Metal Fence
BF	Board Fence
CLF	Chain Link Fence
MR	Metal Rail
C/L	Centreline
WRW	Wooden Retaining Wall
BRW	Brick Retaining Wall
— OHW —	Overhead Wires
UP	Utility Pole
AN	Anchor
LS	Light Standard
	Water Valve, Valve Chamber, Fire Hydrant
	Sewer Manhole, Catch Basin Manhole
	Catch Basin / Drainage, Wing Wall, Head Wall
	Pole, Pole w/ light, Decorative, Lawn Light
PP, LB, PPM, GR	Power Supply, Panel, Pedestal, Transformer, Tower, Regulator
	Amp, Hand Hole, Vault, Gas Valve
BUS, BUS, BUS	OC Transpo: Bus Shelter–No Power, Energized, Isolated
TDS	Streetscape: Planter Box, Grate Square, Eng. Soil
TCB, TCD, SCB	Traffic Connect Box / Disconnect Box, SL Disconnect
THH	R.L Hand Hole, R.L. Camera
	Scada: Handhold, Monitoring Panel
×74.90	Survey Elevation (exp Services Inc. November 2018)
2.0%	Survey Slope and direction of flow

A	Allstream	P	Primus
AT	Altria	P2P	Canadian P2P Fibre
B	Bell	R	Rogers
BH	Birch Hill	S	Sprint
F	Fibre Noir	SL	Street Lighting
G	Globlity	T	Traffic
GT	Group Telecom	TO	Telecom Ottawa
H	Hydro Ottawa	TU	Telus
H1	Hydro One L	V	Videotron
/ L3	Level 3	Z	Zayo
DD	Dept. of Defence	PED	Pedestal (owner unknown)
MH	Manhole (owner unknown)	PW	Public Works
O/OC	OCTranspo	UP	Utility Pole (owner unknown)
SCO	Scada		

SC	SIAMESE CONNECTION
M	WATER METER
RM	REMOTE WATER METER READER
	OVERLAND FLOW ROUTE
	PROPOSED BARRIER CURB (AS PER CITY STD. SC1.1)

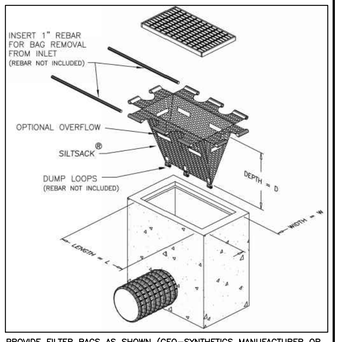

PROVIDE FILTER BAGS AS SHOWN (GEO–SYNTHETICS MANUFACTURER OR APPROVED EQUIVALENT)

FILTER BAG DETAIL

N.T.S

CAUTION

THE POSITION OF ALL POLE LINES, CONDUITS, WATERMAINS, SEWERS AND OTHER UNDERGROUND AND OVERGROUND UTILITIES AND STRUCTURES IS NOT NECESSARILY SHOWN ON THE CONTRACT DRAWINGS, AND WHERE SHOWN, THE ACCURACY OF THE POSITION OF SUCH UTILITIES AND STRUCTURES IS NOT GUARANTEED. BEFORE STARTING WORK, DETERMINE THE EXACT LOCATION OF ALL SUCH UTILITIES AND STRUCTURES AND ASSUME ALL LIABILITY FOR DAMAGE TO THEM.

REV	REVISION DESCRIPTION	DATE	BY	APPD
2	ISSUED FOR SITE PLAN APPLICATION	19/08/19	SAB	BMT
1	ISSUED FOR COORDINATION	05/02/19	SAB	BMT

SCALE: HORIZONTAL 1:250 (0, 2m, 4m, 10m)

NORTH

DESIGNED BY: J.L. FITZPATRICK — LICENSED PROFESSIONAL ENGINEER — 2019-08-19 — PROVINCE OF ONTARIO

REVIEWED BY: B. M. THOMAS — LICENSED PROFESSIONAL ENGINEER — 2019-08-19 — PROVINCE OF ONTARIO

CLIENT: BEST WESTERN PLUS, 1274 CARLING AVENUE, OTTAWA, ON. K1Z 7K8

exp Services Inc.
t: +1 613.688.1899 | f: +1 613 225 7330
2650 Queensview Drive, Unit 100
Ottawa, ON K2B 8H6
Canada
www.exp.com
• BUILDINGS • EARTH & ENVIRONMENT • ENERGY •
• INDUSTRIAL • INFRASTRUCTURE • SUSTAINABILITY •

BASEPLAN	JH/SAB
DESIGN	JLF
CHECKED	BMT
CAD	SAB
PROJECT MANAGER	BMT
APPROVED	JLF

PROJECT: BEST WESTERN PLUS, 1274 CARLING AVENUE, OTTAWA, ONTARIO.

TITLE: SITE GRADING, EROSION AND SEDIMENT CONTROL PLAN

PROJECT No.	OTT-245894-A0
SURVEY	EXP
DATE	DECEMBER 2018
DRAWING No.	C200